View metadata, citation and similar papers at core.ac.uk
brought to you by CORE
provided by University of Birmingham Research Archive, E-papers Repository

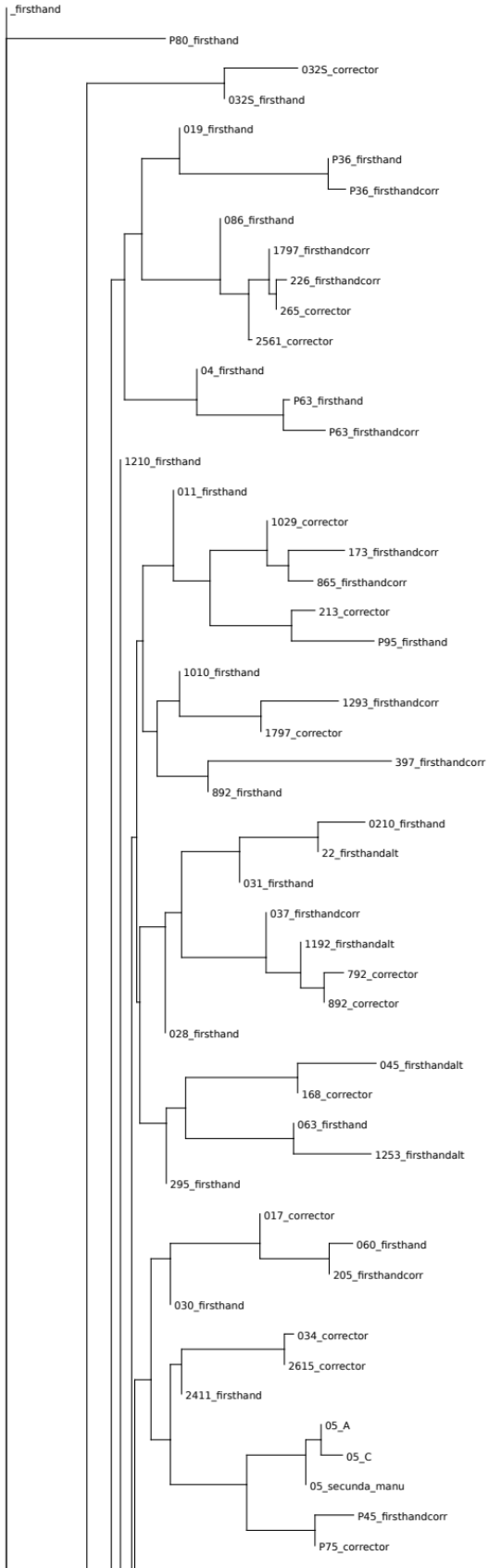

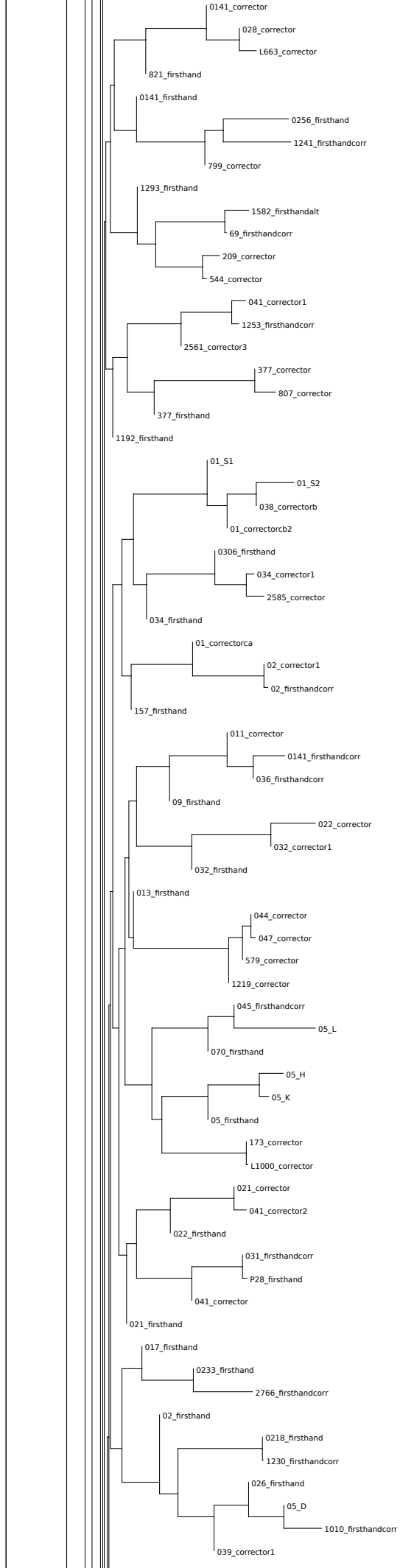
0141_corrector
028_corrector
L663_corrector
821_firsthand
0141_firsthand
0256_firsthand
1241_firsthandcorr
799_corrector
1293_firsthand
1582_firsthandalt
69_firsthandcorr
209_corrector
544_corrector
041_corrector1
1253_firsthandcorr
2561_corrector3
377_corrector
807_corrector
377_firsthand
1192_firsthand
01_S1
01_S2
038_correctorb
01_correctorcb2
0306_firsthand
034_corrector1
2585_corrector
034_firsthand
01_correctorca
02_corrector1
02_firsthandcorr
157_firsthand
011_corrector
0141_firsthandcorr
036_firsthandcorr
09_firsthand
022_corrector
032_corrector1
032_firsthand
013_firsthand
044_corrector
047_corrector
579_corrector
1219_corrector
045_firsthandcorr
05_L
070_firsthand
05_H
05_K
05_firsthand
173_corrector
L1000_corrector
021_corrector
041_corrector2
022_firsthand
031_firsthandcorr
P28_firsthand
041_corrector
021_firsthand
017_firsthand
0233_firsthand
2766_firsthandcorr
02_firsthand
0218_firsthand
1230_firsthandcorr
026_firsthand
05_D
1010_firsthandcorr
039_corrector1

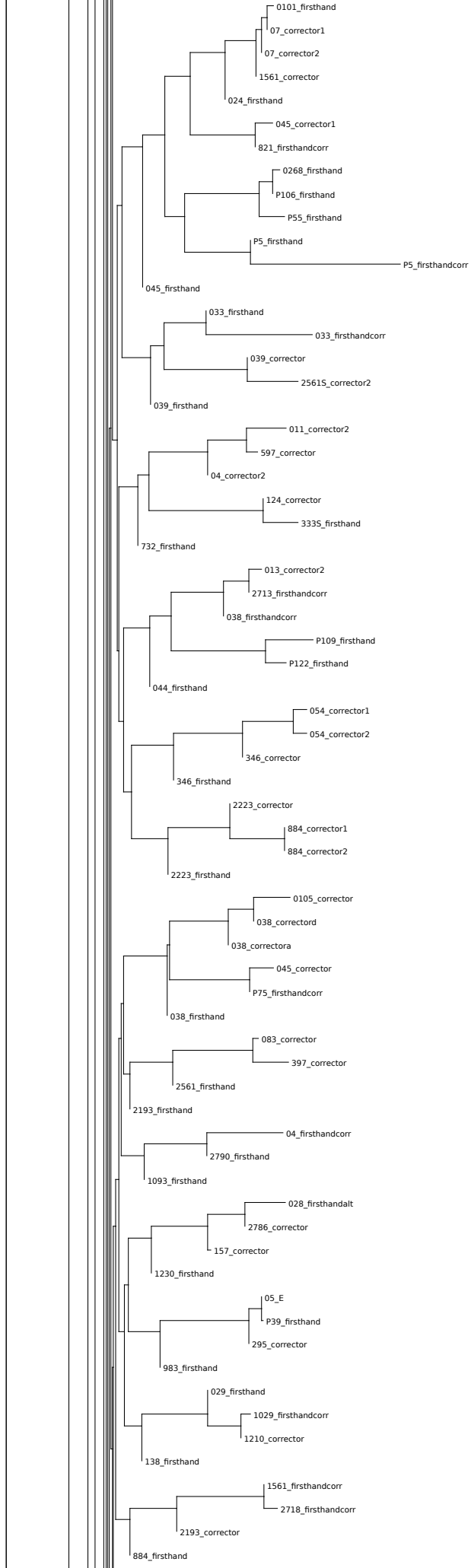
0101_firsthand
07_corrector1
07_corrector2
1561_corrector
024_firsthand
045_corrector1
821_firsthandcorr
0268_firsthand
P106_firsthand
P55_firsthand
P5_firsthand
P5_firsthandcorr
045_firsthand
033_firsthand
033_firsthandcorr
039_corrector
2561S_corrector2
039_firsthand
011_corrector2
597_corrector
04_corrector2
124_corrector
333S_firsthand
732_firsthand
013_corrector2
2713_firsthandcorr
038_firsthandcorr
P109_firsthand
P122_firsthand
044_firsthand
054_corrector1
054_corrector2
346_corrector
346_firsthand
2223_corrector
884_corrector1
884_corrector2
2223_firsthand
0105_corrector
038_correctord
038_correctora
045_corrector
P75_firsthandcorr
038_firsthand
083_corrector
397_corrector
2561_firsthand
2193_firsthand
04_firsthandcorr
2790_firsthand
1093_firsthand
028_firsthandalt
2786_corrector
157_corrector
1230_firsthand
05_E
P39_firsthand
295_corrector
983_firsthand
029_firsthand
1029_firsthandcorr
1210_corrector
138_firsthand
1561_firsthandcorr
2718_firsthandcorr
2193_corrector
884_firsthand

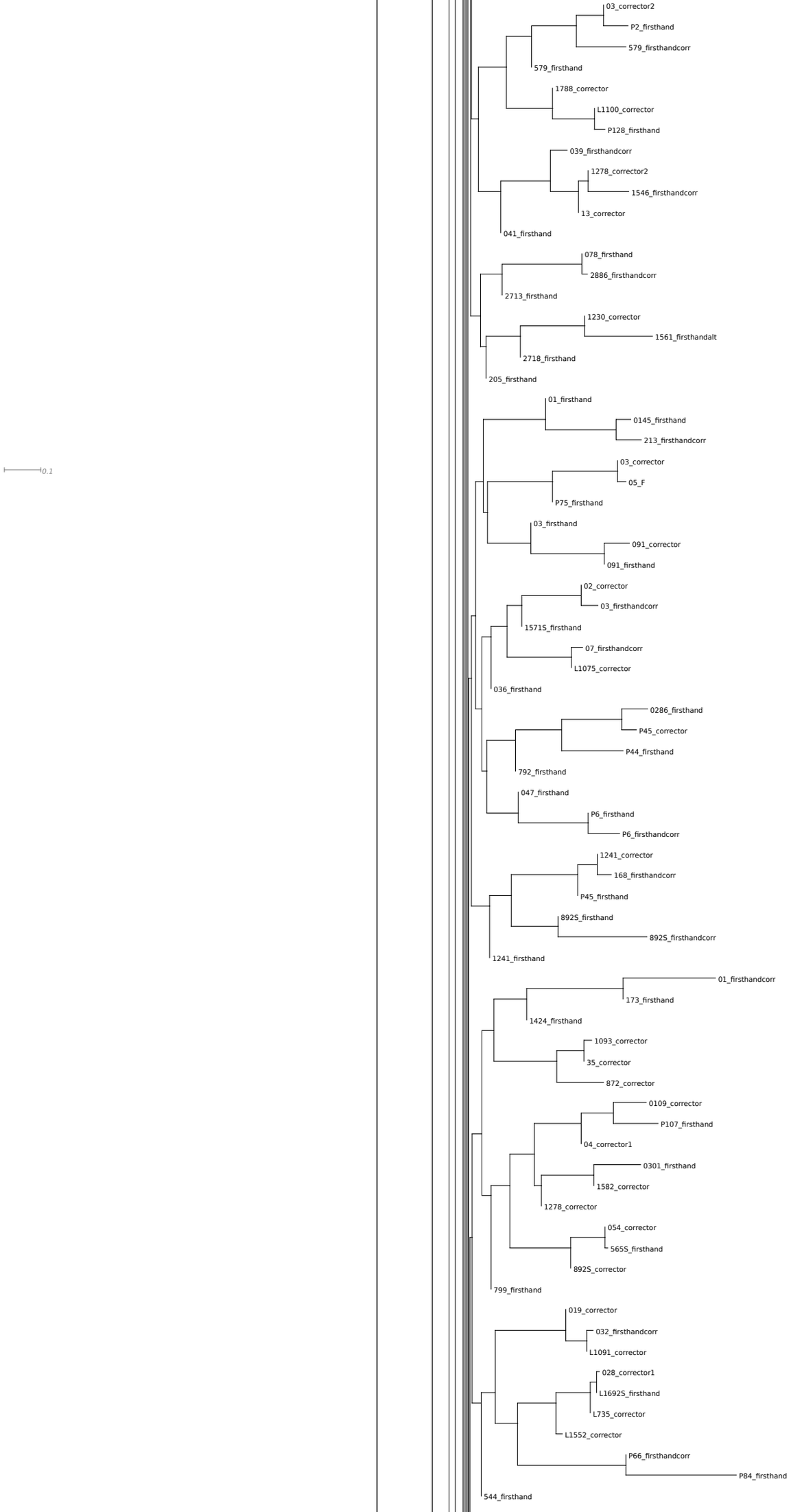
03_corrector2
P2_firsthand
579_firsthandcorr
579_firsthand
1788_corrector
L1100_corrector
P128_firsthand
039_firsthandcorr
1278_corrector2
1546_firsthandcorr
13_corrector
041_firsthand
078_firsthand
2886_firsthandcorr
2713_firsthand
1230_corrector
1561_firsthandalt
2718_firsthand
205_firsthand
01_firsthand
0145_firsthand
213_firsthandcorr
0.1
03_corrector
05_F
P75_firsthand
03_firsthand
091_corrector
091_firsthand
02_corrector
03_firsthandcorr
1571S_firsthand
07_firsthandcorr
L1075_corrector
036_firsthand
0286_firsthand
P45_corrector
P44_firsthand
792_firsthand
047_firsthand
P6_firsthand
P6_firsthandcorr
1241_corrector
168_firsthandcorr
P45_firsthand
892S_firsthand
892S_firsthandcorr
1241_firsthand
01_firsthandcorr
173_firsthand
1424_firsthand
1093_corrector
35_corrector
872_corrector
0109_corrector
P107_firsthand
04_corrector1
0301_firsthand
1582_corrector
1278_corrector
054_corrector
565S_firsthand
892S_corrector
799_firsthand
019_corrector
032_firsthandcorr
L1091_corrector
028_corrector1
L1692S_firsthand
L735_corrector
L1552_corrector
P66_firsthandcorr
P84_firsthand
544_firsthand

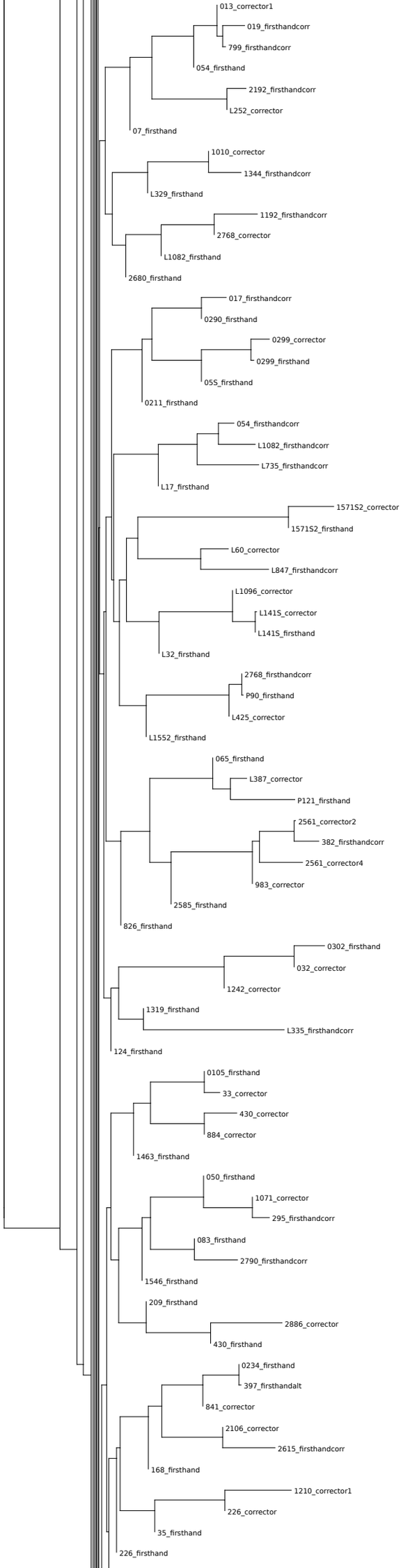
013_corrector1
019_firsthandcorr
799_firsthandcorr
054_firsthand
2192_firsthandcorr
L252_corrector
07_firsthand
1010_corrector
1344_firsthandcorr
L329_firsthand
1192_firsthandcorr
2768_corrector
L1082_firsthand
2680_firsthand
017_firsthandcorr
0290_firsthand
0299_corrector
0299_firsthand
05S_firsthand
0211_firsthand
054_firsthandcorr
L1082_firsthandcorr
L735_firsthandcorr
L17_firsthand
1571S2_corrector
1571S2_firsthand
L60_corrector
L847_firsthandcorr
L1096_corrector
L141S_corrector
L141S_firsthand
L32_firsthand
2768_firsthandcorr
P90_firsthand
L425_corrector
L1552_firsthand
065_firsthand
L387_corrector
P121_firsthand
2561_corrector2
382_firsthandcorr
2561_corrector4
983_corrector
2585_firsthand
826_firsthand
0302_firsthand
032_corrector
1242_corrector
1319_firsthand
L335_firsthandcorr
124_firsthand
0105_firsthand
33_corrector
430_corrector
884_corrector
1463_firsthand
050_firsthand
1071_corrector
295_firsthandcorr
083_firsthand
2790_firsthandcorr
1546_firsthand
209_firsthand
2886_corrector
430_firsthand
0234_firsthand
397_firsthandalt
841_corrector
2106_corrector
2615_firsthandcorr
168_firsthand
1210_corrector1
226_corrector
35_firsthand
226_firsthand

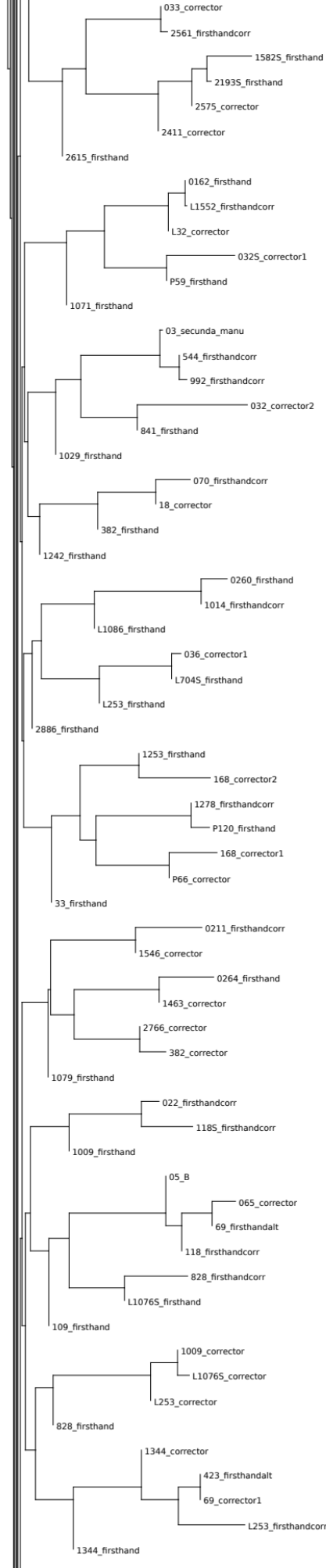
033_corrector
2561_firsthandcorr
1582S_firsthand
2193S_firsthand
2575_corrector
2411_corrector
2615_firsthand
0162_firsthand
L1552_firsthandcorr
L32_corrector
032S_corrector1
P59_firsthand
1071_firsthand
03_secunda_manu
544_firsthandcorr
992_firsthandcorr
032_corrector2
841_firsthand
1029_firsthand
070_firsthandcorr
18_corrector
382_firsthand
1242_firsthand
0260_firsthand
1014_firsthandcorr
L1086_firsthand
036_corrector1
L704S_firsthand
L253_firsthand
2886_firsthand
1253_firsthand
168_corrector2
1278_firsthandcorr
P120_firsthand
168_corrector1
P66_corrector
33_firsthand
0211_firsthandcorr
1546_corrector
0264_firsthand
1463_corrector
2766_corrector
382_corrector
1079_firsthand
022_firsthandcorr
118S_firsthandcorr
1009_firsthand
05_B
065_corrector
69_firsthandalt
118_firsthandcorr
828_firsthandcorr
L1076S_firsthand
109_firsthand
1009_corrector
L1076S_corrector
L253_corrector
828_firsthand
1344_corrector
423_firsthandalt
69_corrector1
L253_firsthandcorr
1344_firsthand

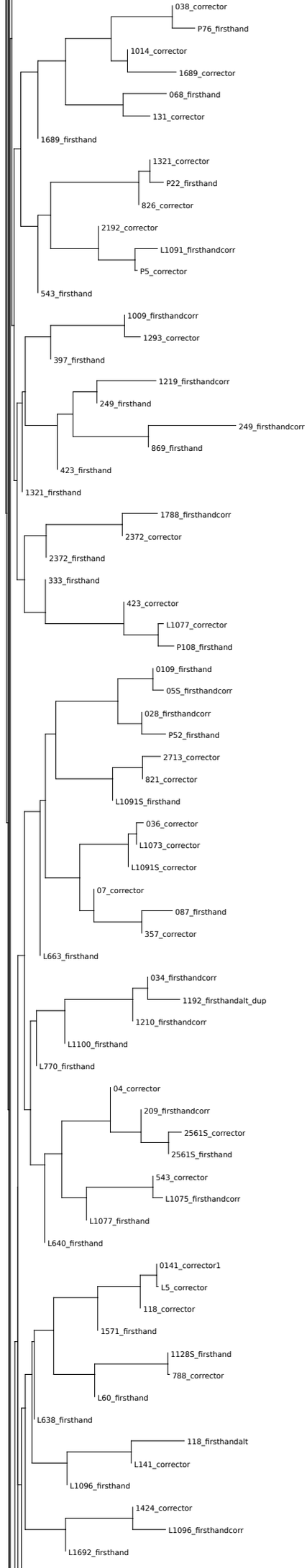
038_corrector
P76_firsthand
1014_corrector
1689_corrector
068_firsthand
131_corrector
1689_firsthand
1321_corrector
P22_firsthand
826_corrector
2192_corrector
L1091_firsthandcorr
P5_corrector
543_firsthand
1009_firsthandcorr
1293_corrector
397_firsthand
1219_firsthandcorr
249_firsthand
249_firsthandcorr
869_firsthand
423_firsthand
1321_firsthand
1788_firsthandcorr
2372_corrector
2372_firsthand
333_firsthand
423_corrector
L1077_corrector
P108_firsthand
0109_firsthand
05S_firsthandcorr
028_firsthandcorr
P52_firsthand
2713_corrector
821_corrector
L1091S_firsthand
036_corrector
L1073_corrector
L1091S_corrector
07_corrector
087_firsthand
357_corrector
L663_firsthand
034_firsthandcorr
1192_firsthandalt_dup
1210_firsthandcorr
L1100_firsthand
L770_firsthand
04_corrector
209_firsthandcorr
2561S_corrector
2561S_firsthand
543_corrector
L1075_firsthandcorr
L1077_firsthand
L640_firsthand
0141_corrector1
L5_corrector
118_corrector
1571_firsthand
1128S_firsthand
788_corrector
L60_firsthand
L638_firsthand
118_firsthandalt
L141_corrector
L1096_firsthand
1424_corrector
L1096_firsthandcorr
L1692_firsthand

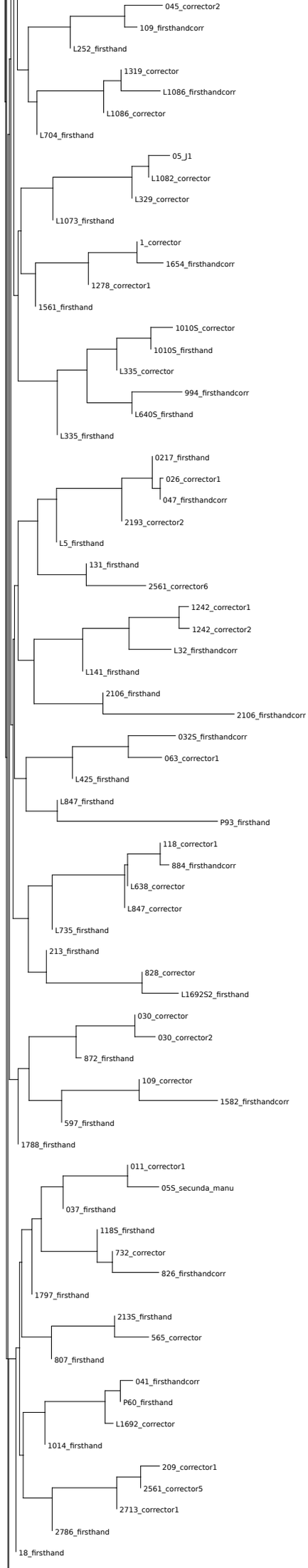
045_corrector2
109_firsthandcorr
L252_firsthand
1319_corrector
L1086_firsthandcorr
L1086_corrector
L704_firsthand
05_J1
L1082_corrector
L329_corrector
L1073_firsthand
1_corrector
1654_firsthandcorr
1278_corrector1
1561_firsthand
1010S_corrector
1010S_firsthand
L335_corrector
994_firsthandcorr
L640S_firsthand
L335_firsthand
0217_firsthand
026_corrector1
047_firsthandcorr
2193_corrector2
L5_firsthand
131_firsthand
2561_corrector6
1242_corrector1
1242_corrector2
L32_firsthandcorr
L141_firsthand
2106_firsthand
2106_firsthandcorr
032S_firsthandcorr
063_corrector1
L425_firsthand
L847_firsthand
P93_firsthand
118_corrector1
884_firsthandcorr
L638_corrector
L847_corrector
L735_firsthand
213_firsthand
828_corrector
L1692S2_firsthand
030_corrector
030_corrector2
872_firsthand
109_corrector
1582_firsthandcorr
597_firsthand
1788_firsthand
011_corrector1
05S_secunda_manu
037_firsthand
118S_firsthand
732_corrector
826_firsthandcorr
1797_firsthand
213S_firsthand
565_corrector
807_firsthand
041_firsthandcorr
P60_firsthand
L1692_corrector
1014_firsthand
209_corrector1
2561_corrector5
2713_corrector1
2786_firsthand
18_firsthand

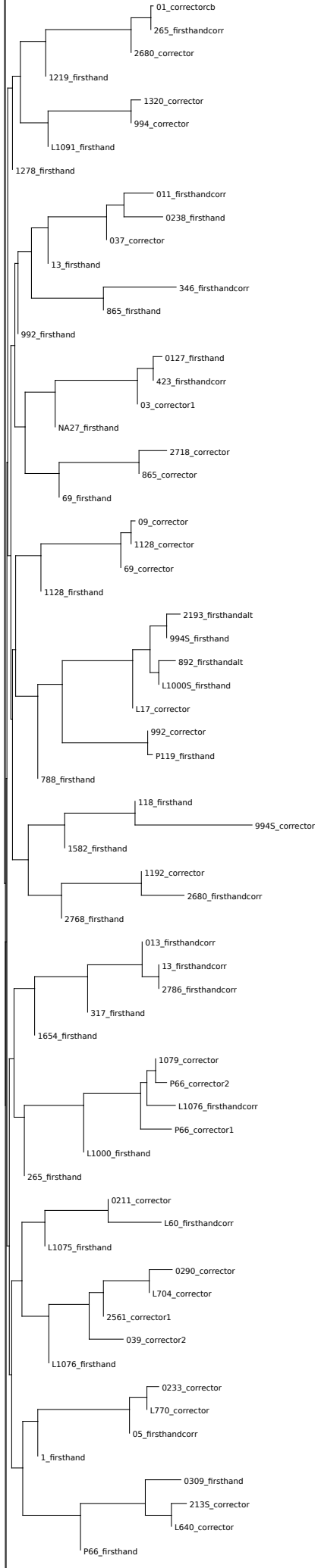
01_correctorcb
265_firsthandcorr
2680_corrector
1219_firsthand
1320_corrector
994_corrector
L1091_firsthand
1278_firsthand
011_firsthandcorr
0238_firsthand
037_corrector
13_firsthand
346_firsthandcorr
865_firsthand
992_firsthand
0127_firsthand
423_firsthandcorr
03_corrector1
NA27_firsthand
2718_corrector
865_corrector
69_firsthand
09_corrector
1128_corrector
69_corrector
1128_firsthand
2193_firsthandalt
994S_firsthand
892_firsthandalt
L1000S_firsthand
L17_corrector
992_corrector
P119_firsthand
788_firsthand
118_firsthand
994S_corrector
1582_firsthand
1192_corrector
2680_firsthandcorr
2768_firsthand
013_firsthandcorr
13_firsthandcorr
2786_firsthandcorr
317_firsthand
1654_firsthand
1079_corrector
P66_corrector2
L1076_firsthandcorr
P66_corrector1
L1000_firsthand
265_firsthand
0211_corrector
L60_firsthandcorr
L1075_firsthand
0290_corrector
L704_corrector
2561_corrector1
039_corrector2
L1076_firsthand
0233_corrector
L770_corrector
05_firsthandcorr
1_firsthand
0309_firsthand
213S_corrector
L640_corrector
P66_firsthand

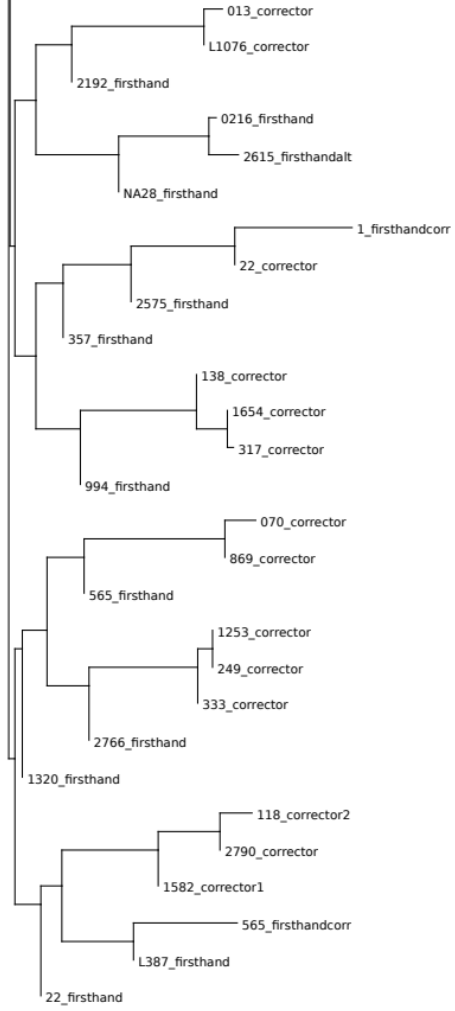
013_corrector
L1076_corrector
2192_firsthand
0216_firsthand
2615_firsthandalt
NA28_firsthand
1_firsthandcorr
22_corrector
2575_firsthand
357_firsthand
138_corrector
1654_corrector
317_corrector
994_firsthand
070_corrector
869_corrector
565_firsthand
1253_corrector
249_corrector
333_corrector
2766_firsthand
1320_firsthand
118_corrector2
2790_corrector
1582_corrector1
565_firsthandcorr
L387_firsthand
22_firsthand