The design and application of power line carrier communication and remote meter reading for use in integrated services and broadband - integrated services digital networks

Thesis

UNRESTRICTED

The Design and Application of Power Line Carrier Communication and Remote Meter Reading for use in Integrated Services and Broadband - Integrated Services Digital Networks

by

W.MILLER MSc C.Eng MIEE MBCS MIEEE.

A Thesis submitted to the

Open University

Faculty of Technology

Discipline of Electronics

For the Degree of

DOCTOR of PHILOSOPHY

March 1997

Memorandum

All work and ideas contained within this dissertation are original unless otherwise specified in the text or by reference. No part of this work has been submitted in support of an application for another degree in this University nor for any degree at any other Institution.

ACKNOWLEDGEMENTS

The author is indebted to the following companies for the information and assistance provided during the production of this thesis:

Scottish Power Telecom (now Scottish Telecom)

Alcatel CET, France.

Vebacom GmbH, Germany

Thanks also go to the IEE Library and particular INSPEC for their help in searching and locating some of the more obscure references on Power Line Carrier and other topics.

And finally, many thanks to Doctor John E. Newbury, of the Open University, for his help, patience, and support throughout the research program.

EX12

RESEARCH DEGREES CENTRE

LIBRARY AUTHORISATION FORM

Please return this form to the The Research Degrees Centre with the two bound copies of your thesis to be deposited with the University Library.
All students should complete Part 1. Part 2 only applies to PhD students.

Student: WILLIAM MILLER PI: M7160583

Degree: PhD.

Thesis title: The Design and Application of Power Line Carrier Communication and Remote Meter Reading for Use in Integrated Services and Broadband Integrated Services Digital Networks.

Part 1 Open University Library Authorisation [to be completed by all students]

I confirm that I am willing for my thesis to be made available to readers by the Open University Library, and that it may be photocopied, subject to the discretion of the Librarian.

Signed: [signature] Date: 30 May 1997.

Part 2 British Library Authorisation [to be completed by PhD students only]

If you want a copy of your PhD thesis to be available on loan to the British Library Thesis Service as and when it is requested, you must sign a British Library Doctoral Thesis Agreement Form. Please return it to the Research Degrees Centre with this form. The British Library will publicise the details of your thesis and may request a copy on loan from the University Library. Information on the presentation of the thesis is given in the Agreement Form.

The University has agreed that your participation in the British Library Thesis Service should be voluntary. Please tick either (a) or (b) to indicate your intentions.

[a] ☑ I am willing for the Open University to loan the British Library a copy of my thesis. A signed Agreement Form is attached.

[b] ☐ I do not wish the Open University to loan the British Library a copy of my thesis.

Signed: [signature] Date: 30 May 1997.

h:\exam\winword\res_exam\exhdr\EX12

maximum requirement of less than 100 kilowatt, must still purchase their electricity from locally based Public Electricity Suppliers (PES). From the 1 April 1998 the requirement to purchase electricity from a locally based Public Electricity Supplier will be abolished entirely, creating a potential market of 22 to 23 million domestic and industrial customers.

The research detailed in this thesis is a direct result of the privatisation and restructuring of the United Kingdom Electricity Supply Industry (ESI). The main objective of the research is an investigation into the design and application of Power Line Carrier Communication and Remote Meter Reading for use in Integrated Services and Broadband - Integrated Services Digital Networks which could be used in this potential market of 22 to 23 million domestic and industrial customers.

The thesis is organised to form a natural progression, commencing with a review of the effects of the privatisation, deregulation, growth, and fragmentation of the United Kingdom Electricity Supply Industry (ESI), which establishes the fundamental need for a Remote Meter Reading system. The progression ends with a proposed method for carrying metering data, from a customer to a Centralised Collection Centre, using Power Line Carrier and a Broadband Integrated Services Digital Network over an Asynchronous Transfer Mode (ATM)/Synchronous Digital Hierarchy (SDH) Transport Network.

The research carried out highlights the present problems in reading utility service meters, including manual and automatic, and therefore possible alternative methods of meter reading are proposed. It is also shown that the greatest technical and economic challenge of any Remote Meter Reading system is the provision of a communications access network to each customer. Since the Regional Electricity Companies already

own the Low Voltage Distribution Network that reaches into nearly every home or business, Power Line Carrier is therefore suggested as optimising the use of the available resources of the Regional Electricity Companies as a suitable access communications network for Remote Meter Reading.

One of the main issues that occurs in Remote Meter Reading concerns the protocols that should be used. Design decisions that affect the choice of protocols for Remote Meter Reading are researched in Chapter 2, not only on a local but also on a second tier supply basis, where the originating supplier may use an independent third party to actually distribute the electricity to the customer, are used to suggest a reduction in the design complexity of a possible Wide Area Remote Meter Reading Network. It is further proposed that such a Wide Area Remote Meter Reading Network should be designed as a series of sub-networks or layers, with each higher level sub-network being built upon a lower level subnetwork or preceding layer. The set of layers, and the protocols associated with those layers, is suggested as being what actually determines the effectiveness of the network architecture of any Remote Meter Reading communications system. How such protocols and architectures, which propose to use the Low Voltage distribution network, should be developed in compliance with the principles laid down in the Open Systems Interconnect (OSI) 7 layer model and also work by the European Committee for Standardisation (CEN) is further investigated. Of particular relevance to this research area is work being carried out by CENELEC SC 205A, Low Voltage Mains Signalling Committee, on the definition of the protocol stack for automatic remote meter reading. The layered model chosen for this purpose, the 3 layer model, is also compared with the established OSI 7 layer model.

It is shown in Chapter 3 that the Low Voltage Distribution Network is a hostile environment to the actual frequencies used for Power Line Carrier operation and following a detailed research and analysis, of the existing and potential modulation systems that could be used on power line, proposes a Frequency Hopping modulated Low Voltage Signalling system to maximise the data rate whilst still overcoming these problems. The resultant maximum bandwidth/data rate ratio analysis, in conjunction with proposals made in section 2.10, on metering data formats and structures for Remote Communication, would make such a metering system, in isolation, uneconomic, but further suggests that the bandwidth available with a Frequency Hopping modulated Low Voltage Signalling system would allow the deployment of other Value Added Services, such as telephony, security monitoring and possibly video, in conjunction with Remote Meter Reading, over the Low Voltage Distribution Network to reduce any cost impact.

In Chapter 4 Radio Remote Metering Systems are considered as a clear alternative to Power Line Carrier Communications given conditions where even Frequency Hopping Power Line Carrier signals could prove impracticable or impossible. It is proposed that Radio Metering Systems offer an economic and flexible alternative to Power Line Carrier Communication and such radio networks are also researched and the findings reported.

The exact future of the copper local loop used in traditional telephone networks is the subject of continual debate, as copper based technology becomes developed for ever increasing bandwidths, the case for a Remote Meter Reading system based on Basic Rate ISDN(BRI) and Primary Rate ISDN (PRI) is discussed in Chapter 5, in terms of both the economical and technical advantages and disadvantages such a system could provide.

SDH equipment is now being deployed as a real technology for transporting Broadband ISDN services, such as ATM, and is suggested as forming the next generation of transport/backbone networks for communicating large volumes of metering data. Given the real competition and economic effectiveness available in using the ATM/SDH circuits provided by most PTOs, in conjunction with the enhanced network management facilities available, an ATM/SDH network is shown in Chapter 6 as providing the foundations of a communications architecture, by offering a flexible, resilient and cost effective transport network, not only for communicating remote meter reading data but also potential Value Added Services such as telephony, security monitoring and video.

It is proposed as a result of the research carried out that in most instances the previous work on Remote Meter Reading systems has offered only partial and fragmented solutions. An integrated approach is suggested to the transportation of remote metering data, where, by using a Frequency Hopping Low Voltage Signalling System to provide the Customer Access Network element of the system, and a Broadband Integrated Services Digital Network the main Transmission element of the system, a complete Remote Meter Reading system can be achieved. These findings do however also anticipate that the main utility providers, Gas, Electricity and Water, who will require such a Remote Metering system, can, in certain cases, face varying Customer Access Network Infrastructures which may not all be serviced by using a Power Line Carrier system. On this basis therefore, and where necessary, a pragmatic reconciliation of such structures with other available communications technologies is suggested, and for completeness, although ISDN and PLC are generally proposed for the main communications links of a Remote Meter Reading system other technologies including radio have been investigated. For the practical implementation of Remote Meter Reading systems an attempt has also been

made to recognise the possible strategic objectives of the Utilities concerned, in terms of financial, geographical restrictions, cost effective communications facilities and economic targets. For these reasons it is shown in Chapter 7, in a typical example, how the combination of an Integrated Services Digital Network (utilising an ATM/ Synchronous Digital Hierarchy Transport Network) and a Power Line Carrier System, may be the most efficient engineering solution, for Regional Electricity Companies, whilst the additional use of Radio in a hybrid topology may be required by the Water and Gas Utilities, for the transportation of data from a Remote Meter Reading system.

It is concluded that the main objective of the research, an investigation into the design and application of Power Line Carrier Communication and Remote Meter Reading for use in Integrated Services and Broadband - Integrated Services Digital Networks which could be used in a potential market of 22 to 23 million domestic and industrial customers, has been achieved, and a suitable design architecture and associated network management system proposed. Power Line Carrier though is very much in its infancy, compared to the other communication technologies, such as radio, and may require further research, for example, a detailed Electromagnetic Magnetic Compatability (EMC) analysis incorporating many of the new standards which are now being created, on other systems outside the Low Voltage Distribution Network. It is also suggested in Chapter 8 that further research is required into a number of areas, such as filters, that are not only relevant to the development of Remote Meter Reading but the provision of further Value Added Services such as Security Monitoring, Telephony and possibly Video over the Low Voltage Distribution network which could reduce the cost impact of implementing a Remote Metering System

Glossary

AC	ALTERNATING CURRENT
ADC	ANALOGUE TO DIGITAL CONVERSION.
ADPCM	ADAPTIVE DIFFERENTIAL PULSE CODE MODULATION.
AFC	AUTOMATIC FREQUENCY CONTROL.
AGC	AUTOMATIC GAIN CONTROL
ALC	AUTOMATIC (SIGNAL) LEVEL CONTROL.
AM	AMPLITUDE MODULATION
AMLVS	AMPLITUDE MODULATED LOW VOLTAGE SIGNALLING
AMR	AUTOMATIC METER READING
AMPS	ADVANCED MOBILE PHONE SYSTEM
APDU	APPLICATION PROTOCOL DATA UNITS
ASCII	AMERICAN STANDARD CODE FOR INFORMATION INTERCHANGE
ASDL	ASYMMETRIC DIGITAL SUBSCRIBER LOOP
ASK	AMPLITUDE SHIFT KEYING
ASN.1	ABSTRACT SYNTAX NUMBER 1
ATTH	ATM TO THE HOME
BABT	BRITISH APPROVALS BOARD FOR TELECOMMUNICATIONS
BER	BIT ERROR RATE
B-ISDN	BROADBAND INTEGRATED SERVICES DIGITAL NETWORK
BPS	BITS PER SECOND
BRI	BASIC RATE INTERFACE
BS	BRITISH STANDARD
BT	BRITISH TELECOM
CANE	CUSTOMER ACCESS NETWORK ELEMENT
CC	CENTRAL CONTROLLER
CCIR	INTERNATIONAL RADIO CONSULTATIVE COMMITTEE
CCITT	INTERNATIONAL CONSULTATIVE COMMITTEE ON TELEGRAPH AND TELEPHONES
CEGB	CENTRAL ELECTRICITY GENERATING BOARD
CEN	EUROPEAN COMMITTEE FOR STANDARDISATION (Literally)
CH	CHANNEL
CLVASK	COHERENT LOW VOLTAGE AMPLITUDE SHIFT KEYING
CLVFSK	COHERENT LOW VOLTAGE FREQUENCY SHIFT KEYING
CLVPSK	COHERENT LOW VOLTAGE PHASE SHIFT KEYING
C/N	CARRIER TO NOISE RATIO
CLP	CELL LOSS PRIORITY
C/No	RATIO OF CARRIER POWER TO SPECTRAL NOISE POWER DENSITY.
CSMA/CD	CARRIER SENSE MULTIPLE ACCESS/COLLISION DETECTION

CST	COMPANION STANDARD
dB	DECIBELS
DAC	DIGITAL TO ANALOGUE CONVERSION
DC	DIRECT CURRENT
DCS	DISTRIBUTED CONTROL SYSTEM
DCTE	DATA CIRCUIT TERMINATING EQUIPMENT
DDC	DATA DISPATCH COMPUTER
DEMOD	DEMODULATOR
DET	DETECTOR
DGES	DIRECTOR GENERAL OF THE ELECTRICITY SUPPLY
DLMS	DISTRIBUTION LINE MESSAGE SPECIFICATION
DS	DIGITAL SYNTHESIS
DSLVSSS	DIRECT SEQUENCE LOW VOLTAGE SPREAD SPECTRUM SIGNALLING
DSM	DEMAND SIDE MANAGEMENT
DT	DWELL TIME
DTE	DATA TERMINAL EQUIPMENT
DTI	DEPARTMENT OF TRADE AND INDUSTRY
Eb/No	RATIO OF ENERGY PER USER BIT TO SPECTRAL NOISE POWER DENSITY.
ECU	EUROPEAN CURRENCY UNIT
EIRP	EQUIVALENT ISOTROPIC RADIATED POWER.
EMC	ELECTRO-MAGNETIC COMPATABILITY
EMHU	ENERGY MANAGEMENT HOME UNIT
EOW	ENGINEERS ORDER WIRE
ESC	ENGINEERING SERVICE CIRCUIT.
ESI	ELECTRICITY SUPPLY INDUSTRY
EU	EUROPEAN UNION
FDM	FREQUENCY DIVISION MULTIPLEX
FEC	FORWARD ERROR CORRECTION.
FH	FREQUENCY HOPPING
FHLVSSS	FREQUENCY HOPPING LOW VOLTAGE SPREAD SPECTRUM SIGNALLING
FM	FREQUENCY MODULATION
FMLVS	FREQUENCY MODULATED LOW VOLTAGE SIGNALLING
FRC	FULL RATE CHANNEL
FSF	FREQUENCY SHAPE FACTOR
FSK	FREQUENCY SHIFT KEYING
FTTH	FIBRE TO THE HOME
GFC	GENERIC FLOW CONTROL
GHz	GIGAHERTZ(hertz .10+9).
GSM	GROUPE SPECIAL MOBILE
HBES	HOME AND BUILDING ELECTRONIC SYSTEM
HEC	HEADER ERROR CONTROL
HF	HIGH FREQUENCY
HFC	HYBRID/FIBRE/COAX
HPA	HIGH POWERED AMPLIFIER
HRC	HALF RATE CHANNEL
HVDC	HIGH VOLTAGE DIRECT CURRENT
Hz	HERTZ
IEC	INTERNATIONAL ELECTROTECHNICAL COMMITTEE

IF	INTERMEDIATE FREQUENCY.
IP	INTERNET PROTOCOL
ISDN	INTEGRATED SERVICES DIGITAL NETWORK
ISO	INTERNATIONAL STANDARDS ORGANISATION
Kbits/s	KILO BITS PER SECOND
kHz	KILOHERTZ
km	KILOMETRES
kW	KILOWATTS
kV	KILOVOLTS
LAN	LOCAL AREA NETWORK
LAP-D	LINK ACCESS PROTOCOL -D
LCC	LOCAL COLLECTION CENTRE
LLAC	LOGICAL LINK ACCESS CONTROL
LT	LINE TERMINATION
LV	LOW VOLTAGE
LVASK	LOW VOLTAGE AMPLITUDE SHIFT KEYING
LVBPSK	LOW VOLTAGE BINARY PHASE SHIFT KEYING
LVCPFSK	LOW VOLTAGE CONTINUOUS PHASE FREQUENCY SHIFT KEYING
LVFSK	LOW VOLTAGE FREQUENCY SHIFT KEYING
LVNCPFSK	LOW VOLTAGE NON CONTINUOUS PHASE FREQUENCY SHIFT KEYING
LVPSK	LOW VOLTAGE PHASE SHIFT KEYING
LVS	LOW VOLTAGE SIGNALLING
LVSSS	LOW VOLTAGE SPREAD SPECTRUM SIGNALLING
m	METRES
ma	MILLIAMPERES
MBits/s	MEGA BITS PER SECOND
MCS	METER COMMUNICATIONS SYSTEM
MF	MEDIUM FREQUENCY
Mhz	MEGAHERTZ
MIU	METERING INTERFACE UNIT
MMS	MANUFACTURER MESSAGING SYSTEM
MODEM	MODULATOR/DEMODULATOR
MP	MEMBER OF PARLIAMENT
msec	MILLISECONDS
MUX	MULTIPLEX
MLLVPSK	MULTI LEVEL LOW VOLTAGE PHASE SHIFT KEYING
mw	MILLIWATTS
MW	MEGAWATTS
NBLVFSK	NARROW BAND LOW VOLTAGE FREQUENCY SHIFT KEYING
NCLVFSK	NON COHERENT LOW VOLTAGE FREQUENCY SHIFT KEYING
NGC	NATIONAL GRID COMPANIES
NNI	NETWORK NODE INTERFACE
NT	NETWORK TERMINATION
OFFER	OFFICE OF ELECTRICITY REGULATION
PAD	PACKET ASSEMBLER/DISASSEMBLER
PDH	PLESIOCHRONOUS DIGITAL HIERARCHY
PLC	POWER LINE CARRIER

PM	PHASE MODULATION
PMLVS	PHASE MODULATED LOW VOLTAGE SIGNALLING
POTS	PLAIN OLD TELEPHONE SERVICES
PRI	PRIMARY RATE INTERFACE
PROM	PROGRAMMABLE READ ONLY MEMORY
PSA	POOLING AND SETTLEMENT AGREEMENT
PSD	POWER SPECTRAL DENSITY
PSK	PHASE SHIFT KEYING.
PSTN	PUBLIC SWITCHED TELEPHONE NETWORK
PSU	POWER SUPPLY UNIT
PT	PAYLOAD TYPE
QAM	QUADRATURE AMPLITUDE MODULATION
QPSK	QUADRATURE PHASE SHIFT KEYING.
RAM	RANDOM ACCESS MEMORY
RAN	RESIDENTIAL ACCESS NETWORK
REC	REGIONAL ELECTRICITY COMPANY
RF	RADIO FREQUENCY
RMR	REMOTE METER READING
ROM	READ ONLY MEMORY
RTCE	REAL TIME CHANNEL EVALUATION
Rx	RECEIVE
SAP	SERVICE ACCESS POINT
SDN	SERVICE DISTRIBUTION NETWORK
SEAL	SIMPLE AND EFFICIENT ADAPTION LAYER
SINAD	SIGNAL + NOISE + DISTORTION
S/N	SIGNAL TO NOISE RATIO
SPN	SERVICE PROVIDER NETWORK
TA	TERMINAL ADAPTER
TACS	TOTAL ACCESS COMMUNICATIONS SYSTEM
TCM	TRELLIS CODED MODULATION
TDM	TIME DIVISION MULTIPLEX.
TDMA	TIME DIVISION MULTIPLE ACCESS
TE	TERMINAL EQUIPMENT
TEI	TERMINAL ENDPOINT IDENTIFIER
TMRMCN	TOTALLY MANAGED REMOTE METER COMMUNICATIONS NETWORK
Tx	TRANSMIT
UDP	USER DATAGRAM PROTOCOL
UHF	ULTRA HIGH FREQUENCY
UK	UNITED KINGDOM
VC	VIRTUAL CIRCUIT
VCI	VIRTUAL CIRCUIT IDENTIFIER
VHF	VERY HIGH FREQUENCY
VDE	VIRTUAL DISTRIBUTION EQUIPMENTS
VPI	VIRTUAL PATH IDENTIFIER
VSAT	VERY SMALL APERTURE TERMINALS
WAN	WIDE AREA NETWORK
WARMRN	WIDE AREA REMOTE METER READING NETWORK
WLL	WIRELESS IN THE LOCAL LOOP

Abbreviations Specifically Related to the Synchronous Digital Hierarchy (SDH) and Broadband ISDN

ADM	ADD-DROP MULTIPLEXER
ATM	ASYNCHRONOUS TRANSFER MODE
AIS	ALARM INDICATION SIGNAL
AU	ADMINISTRATIVE UNIT
B-ISDN	BROAD BAND INTEGRATED SERVICES DIGITAL NETWORK
CAN	CUSTOMER ACCESS NETWORK
CAR	CUSTOMER ACCESS RING
CMIP	COMMON MANAGEMENT INFORMATION PROTOCOL
CRC	CYCLIC REDUNDANCY CHECK
D&C	DROP & CONTINUE
DCC	DATA COMMUNICATIONS CHANNEL
DCN	DATA COMMUNICATIONS CHANNEL
DXC	DIGITAL X-CONNECT
ECC	EMBEDDED CONTROL CHANNEL
FCAPS	FAULT, CONFIGURATION, ACCOUNTING, PERFORMANCE, SECURITY
GNE	GATEWAY NETWORK ELEMENT
HOVC	HIGHER ORDER VIRTUAL CONTAINER
LOVC	LOWER ORDER VIRTUAL CONTAINER
MCF	MESSAGE COMMUNICATIONS FUNCTION
MIB	MANAGEMENT INFORMATION BASE
MSOH	MULTIPLEX SECTION OVERHEAD
NE	NETWORK ELEMENT
NEM	NETWORK ELEMENT MANAGER
NML	NETWORK MANAGEMENT LAYER
NMOSS	NETWORK MANAGEMENT OPERATIONS SUPPORT SYSTEM
NMS	NETWORK MANAGEMENT SYSTEM
NT	NETWORK TERMINATOR
OSS	OPERATIONS AND SUPPORT SYSTEM
POH	PATH OVERHEAD
SDH	SYNCHRONOUS DIGITAL HIERARCHY
SDXCE	SYNCHRONOUS DIGITAL CROSS CONNECT EXCHANGES
SMK	SHARED MANAGEMENT KNOWLEDGE
SML	SERVICE MANAGEMENT LAYER
SMN	SDH MANAGEMENT NETWORK
SMS	SDH MANAGEMENT SUBNETWORK
SNMP	SIMPLE NETWORK MANAGEMENT PROTOCOL
SONET	SYNCHRONOUS OPTICAL NETWORK
STM	SYNCHRONOUS TRANSPORT MODULE
STM-n	SYNCHRONOUS TRANSPORT MODULE -n (N=1 4,16,64)
TE	TERMINAL EQUIPMENT
TMN	TELECOMMUNICATIONS MANAGEMENT NETWORK
VC	VIRTUAL CONTAINER

CONTENTS

FIGURES

TABLES

Chapter 1. Customer Communications and Metering Technology

1.1 Introduction

The Electricity Supply Industry (ESI) in the United Kingdom was nationalised in 1948 and a new organisation formed to provide for the generation, transmission and local distribution of electricity supplies. In England and Wales this new organisation had a three tiered structure consisting of the Electricity Council, the Central Electricity Generating Board (CEGB) and the Area Boards.

The role of the Electricity Council [6] was to advise the government on electricity matters, maintain industrial relations, and also provide a forum for policy formulation. In this last role the Council established and raised the capital necessary to support investment programmes included in which was the consideration of tariffing structures to secure revenue. These programmes were supported by technological research into the generation, transmission, distribution and utilisation of energy whilst compatible economic research was also carried out into consumer's habits, demand characteristics and the forecasting of demand. The Council delegated the every day matters concerning generation and transmission to the CEGB who constructed, owned, operated power stations and transmission lines, and carried out research into generation and transmission technology. The Area Boards were responsible for the supply and distribution of electricity.

Within this nationalised Electricity Supply Industry the CEGB was responsible for the generation of electricity in England and Wales. The Electricity generated was transported through the National Grid to a number of 'Bulk Supply Points' from which the electricity was received by 12 Area Boards and distributed to customers

through the boards networks. In certain instances the larger industrial customers could also buy their electricity direct from the National Grid.

For approximately forty years, from 1948 until 1988, the Electricity Supply Industry [6] was owned and operated as a state run monopoly. In 1988 however a Government White Paper proposed the privatisation of the Electricity Supply Industry along with a new operational framework to establish efficient and competitive energy markets, wider ownership, and the rights of both customers and suppliers. The White Paper proposals were implemented in the Electricity Act of 1989 and the Act formally came into force on the 31st March 1990

The Act led to a deregulation in 1990 and the original companies were floated on the stock market. In this new restructured United Kingdom Electricity Supply Industry, the generation resources of the CEGB were divided between the new generating companies, PowerGen and National Power. Nuclear power stations were transferred to Nuclear Electric which was initially retained as a public sector company.

The National Grid was vested in the National Grid PLC which also took on the responsibility of the CEGBs Pumped Storage Power Generation stations.

The 12 Area Boards became the 12 Regional Electricity Companies (RECs) or Public Electricity Suppliers (PES), as shown in Figure 1, and these RECs jointly own the NGC. Figure 1 also shows the subsequent bidders for some of the original RECs. The NGC retained its monopoly over electricity trade between generators and suppliers in the wholesale pool market.

Figure 1 - Original REC Franchise Areas

The Electricity Council [6] was reorganised during privatisation to form the Electricity Association, the trade association for the privatised companies.

1.1.1 The United Kingdom ESI Regulatory Environment

The National Grid Company (NGC) is the only current holder of a transmission licence for England and Wales. Included within this licence are the following obligations and responsibilities:

a. The operation, maintenance and development of the main interconnected transmission system in England and Wales.

b. Scheduling and despatching generating links in England and Wales, and power from France and Scotland.

c. Providing quality of supply including frequency and voltage.

d. Managing the operation of the electricity market place.

The RECs are now statutorily required to supply electricity which used to be the responsibility of the CEGB. To fulfil this demand the RECs need to contract the required amount of capacity from the electricity generators, who will build any new generating capacity. This means the RECs have to forecast their demand with accuracy, reliability, quality constraints, and has led to the imposition of further requirements on the industry such as:

e. Controlling the distribution of energy at more efficient and economic levels.

f. Meeting Customer requirements.

g. Maintaining or improving the profits necessary for a private company's survival.

These additional demands have been a major factor in determining a number of developments in metering and associated technologies now taking place in the industry, many of which should result in a high level of functional integration and

cooperation between the Regional Electricity Companies whilst still allowing each REC to retain independent control of their own companies destinies.

In previous years most of the development to meet the type of demands now being imposed on the Electricity Supply Industry, including metering and the associated technologies, was under the control of the large but mainly benign, government controlled regional area boards. Since deregulation however the situation, as shown in Figure 1, has changed and the RECs formed when the old Area Boards were disbanded have attracted the attention of investors, both beneficial and predatory, who also must look to the RECs to be profitable. Not surprisingly some form of legislative control was necessary to balance these different demands and ensure that standards were maintained in the industry.

1.1.2 The Office of Electricity Regulation (OFFER)

The Office of Electricity Regulation (OFFER), under an independent regulator, the Director General of the Electricity Supply (DGES), is responsible, to the Secretary of State, for ensuring that the provisions of licences under which the industry operates are adhered to. OFFER has not found its task easy. Regulation in any shape or form is likely to have a major effect on the future evolution and corresponding profitability of the United Kingdom Electricity Supply Industry. The complexities of the United Kingdom Electricity Supply Industry, which are explained in more detail in Chapter 2, have proved to be a considerable challenge to the political and legal minds of OFFER and the results of their efforts have left few who have been entirely satisfied with their work. OFFER has the imposing task of balancing the conflicting interests of business and domestic customers, equipment suppliers, and the RECs, within a regulatory framework which must be seen to be open and fair. At one extreme is the view of a strictly regulated Electricity Supply Industry as a natural monopoly, whilst at the other is that of a

competitive, free market environment with minimal regulatory constraints. OFFER must provide solutions for the Electricity Supply Industry that lie somewhere between these two extreme views.

1.1.3 Pricing Structures in the United Kingdom Electricity Supply Industry

Before privatisation, electricity prices were set by the Electricity Council at levels intended to meet financial targets set by the government. There was little if no connection between how prices were set and how the CEGB scheduled and dispatched its generating capacity to meet demand.

On the 31st March 1990 a new market was established for the trading of electricity between generators and suppliers. This new market was established on two principle characteristics associated with the physical generation and supply of electricity in an integrated system:

a. It is not possible to trace electricity from a particular generator to a particular supplier.

b. It is not practical to store electricity in large quantities, so that constant matching of generation to demand of electricity is required.

For these reasons, electricity generated in an integrated system is 'pooled' to meet demand. This 'Pool' exists as a mechanism to allow trading between generators and suppliers but does not itself buy or sell electricity. Bulk buying and selling of electricity is done at wholesale prices and calculated according to 'Pool Trading Rules'.

1.1.4 The Settlement System

The Settlement System is a computerised system used to calculate prices and to process metered, operational and other data which is used to calculate the payments due under the pool trading arrangments. The system takes information from generators and suppliers, and also produces a forecast of the price of electricity on the following day. At 10.00 a.m every day the generators bid into the Pool how much electricity they are willing to generate from each of their power stations for every half hour period (Settlement Period) of the following day, and at what price. They also define the output available from each plant, start up requirements, loading information and other technical characteristics. All the bids are taken together and used to form the Merit Order, with the cheapest plant first.

The National Grid Company prepares a notional schedule by selecting plant in merit order to meet projected half-hourly demand, with a reserve capacity of about 1000 MW. The resulting Pool Purchase Price for each half hour period of the following day is advised to all generators and suppliers by 4 p.m of the previous day, and is published in the national press. Prices are in pounds per megawatt-hour rounded to two decimal places. To convert the megawatt prices to pence per kilowatt-hour, divide by ten. For example 16.86 pounds/MWh hour becomes 1.686p/KWh. Prices for electricity, determined for the purposes of the electricity Pooling and Settlement Arrangements in England and Wales, might appear in the list form shown in Table 1.

½ hour period ending	Provisional Price for Trading on 02.02.97 Pool Purchase Price Pounds/MWh	Final Prices for Trading on 02.02.97 Pool Purchase Price Pounds/MWh	Pool selling price Pounds/MWh
0030	19.47	35.10	35.10
0100	19.47	39.90	41.03
0130	19.47	35.10	35.10
0200	19.47	39.90	41.03
2400	16.07	22.34	23.47

Table 1 - Prices for Electricity, determined for the purposes of the electricity Pooling and Settlement Arrangements in England and Wales

The Settlement System mirrors the selection of actual generators and calculates the payments to the various parties after recording what actually happened on the day. Metered values of supplies generated are summed and aggregated for each generating company. Supplies taken by RECs are also summed and referenced to the Grid Supply Points from which supplies are taken. The Settlement System handles up to 30 million pounds daily and the process takes 28 days to complete.

1.1.5 Fair Pricing of Electricity Supplies

One of the main responsibilities of OFFER is ensuring, under the terms of the licenses to which the industry operates, that pricing structures are implemented that specify 'fair' charges for electricity, and the terms and conditions under which that electricity is supplied are adhered to. On the 1 April 1991 for example industrial consumers with consumption of 1 Megawatt and above no longer had to purchase their electricity from locally based Public Electricity Suppliers. Since the 1 April 1994 any consumer with a maximum demand greater than 100 kilowatt was also freed from supply restrictions and can theoretically buy their electricity from any licensed supplier, including non local ones, at whatever pricing structure

is agreed. At present, electricity consumers in the United Kingdom, with a maximum requirement of less than 100 kilowatt, must still purchase their electricity from locally based Regional Electricity Companies. The cost of electricity from these suppliers is regulated by a system of price controls subject to the authority of the Office of Electricity Regulation (OFFER).

1.1.6 A Second Tier Supply System

From the 1 April 1998 the requirement to purchase electricity from a local Regional Electricity Company will be abolished entirely, bringing full competition into a potential market of 23 million customers. The Director General of Electricity Supply has proposed that full competition should be introduced in phases to ensure that the Electricity Supply Industry's systems shall be able to cope with these changes.

The phases will be based on post codes with the first phase commencing on the 1 April 1998 to include 10% of customers. The second phase shall commence at the end of May 1998 and will cover a further 15% in each post code area whilst the third phase, covering 25% of customers, will begin towards the end of July 1998. A final phase will take place in mid September 1998 and will cover the remaining 50% of the market.

Such a phased introduction, based solely on post codes, could initially restrict competition in cases where potential customers have sites distributed throughout the United Kingdom. The proposals for the first phase, commencing on the first of April 1998, will therefore also include all customers with half-hour metering, multiple sites, and secondary customers who already have links to existing 100kW customers.

Each of the individual RECs has a Public Supply License which covers supplies to customers in the RECs own area. However the Act of 1989 allowed a customer to purchase electricity from a source other than its local PES and it is clear that within the fully competitive market, commencing in April 1998, that there is the potential for these other sources to act as retailers, by purchasing electricity from the Power Generation companies, and selling it wholesale to customers, although not physically supplying the electricity themselves. In an example, shown in Figure 2, such a second tier supply situation could give rise to at least three separate billing transactions. It is feasible under the new United Kingdom regulations that a company, such as Scottish Power, could be contracted to provide electricity to a customer presently located within another REC's boundary area, for example the Yorkshire Electricity boundary. The subsequent billing transactions could be:

a. Customer to Scottish Power at agreed Metered Consumption Rate.

b. Scottish Power to Yorkshire Electricity for use of its distribution network.

c. Scottish Power will be charged via the Pooling and Settlement Agreement (PSA) for the electricity it has drawn from the national electricity pool to supply its customer.

The present metering and billing process provides, almost entirely, for the routing of a service from one single local supplier direct to an end user. In the liberalised market of the future such a metering system will be totally inadequate.

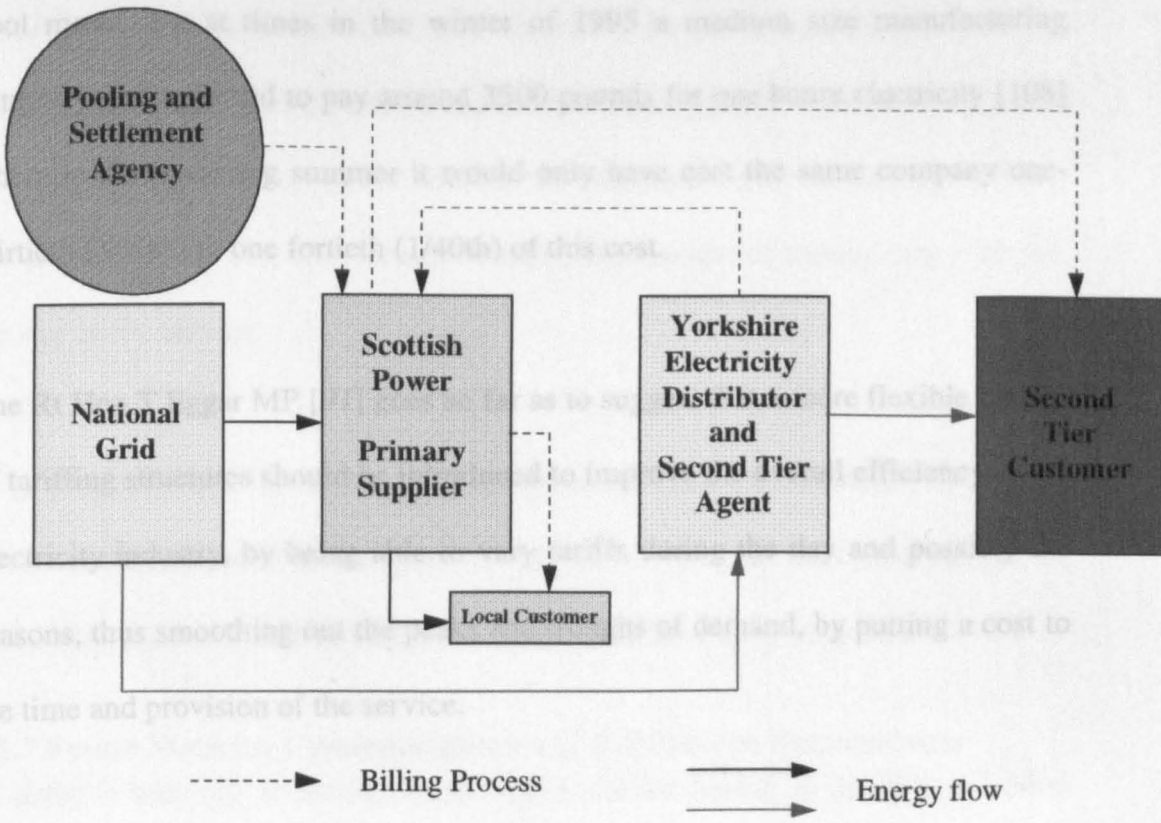

Figure 2 - A Second Tier Energy Supply and Billing System

One of the most complicated elements in any second tier pricing structure will be the measuring, provision and charges for electricity supplied via the Pooling and Settlement Agreement (PSA). The PSA requires every second tier customer to have half hourly metering installed at their premises. Metering has to comply with the relevant OFFER Code of Practice (Code G). The half hourly readings from the meters are collected and processed by the Second Tier Agent (usually the local REC) on behalf of the Settlement System Administrator. Metering data is collected and normally used to prepare a monthly invoice.

Pool prices [98] were theoretically capped at a price of 2.61p/kWh on a demand weighted basis, in 1994, but demand meant that at some times, the 11 April 1995 and the 7 December 1995 [108] for example, the price actually reached 86.3p/kWh and 107.34 p/kWh respectively. In practical terms this operation of the

Pool meant that at times in the winter of 1995 a medium size manufacturing company was expected to pay around 3500 pounds for one hours electricity [108] where in the preceding summer it would only have cost the same company one-thirtieth (1/30th) to one fortieth (1/40th) of this cost.

The Rt Hon T.Eggar MP [97] goes so far as to suggest that a more flexible system of tariffing structures should be introduced to improve the overall efficiency of the electricity industry, by being able to vary tariffs during the day and possibly the seasons, thus smoothing out the peaks and troughs of demand, by putting a cost to the time and provision of the service.

Three main options [3,5,6,21] have currently been proposed to provide billing systems that could handle such a tariffing structure:

a. Licensing the relevant Utility supply with everyone paying the same rate.

b. A Banded system similar to the Council Tax. OFFER has also suggested that a billing system should be based on 48 x 30 minute billing cycles over a 24 hour period.

c. OFFER has also proposed the development of a Remote "Smart" Meter Reading system and associated communications network.

Industrial and domestic users are already complaining about the cost of Utility services and it is unlikely therefore that option 'a' shall gain much support, since the most economic users would be paying approximately the same amount for their service as more indiscriminate users. In many ways option c is the best

choice, once a decision has been made on who (supplier or user), will pay for the facility. The additional monitoring capabilities that could be associated with such a Remote Meter Reading system, puts in the customer's own hands responsibility for controlling the use, and correspondingly, the amount of money they will pay, for any utility service.

It is proposed that in a deregulated, privatised and commercially orientated environment, option c is the most likely method to gain universal acceptance from, both industrial and domestic customers, and the Utility suppliers.

1.1.7 Future Metering Communications and Information Requirements

In order to take full advantage of the opportunities arising in the ESI and other utility supply areas an Integrated Remote Metering Communication and Information Systems infrastructure must be in place.

The provision of such an infrastructure is justified not only on the basis of a cost-effective tariffing structure, but also in possible rising levels in, quality of service, provisioning, and administration of the service provided. A new flexible metering and billing system must not only take into account variations in pool price and subsequently the cost of supply to the customer, but also the fact that the service route from the Supplier to the End User could be complicated and involve more than two parties.

Such a metering system shall not be easy or inexpensive to implement. It was estimated in 1994 [1,3, and 5] that to provide a metering installation for the larger electricity consumers in a second tier supply system, using currently available communications technology, would cost the electricity industry in the region of £2500 pounds. Given that the annual electricity bill of a typical 1 Megawatt

customer is £250000 this is not a large amount in overall percentage terms, but to the "smaller scale" users, with annual bills of £25000 for 100 kilowatts, this figure is quite considerable. This analysis cannot be extended to domestic/residential customers with annual bills of only £300.

To decrease the potential impact of this high cost it could be feasible to provide additional Value Added Services to the user over the Remote Meter Reading Communications network, for example the use of a metering communications network to provide telephony, security monitoring and possibly other telecommunications services. In order to provide such schemes however there is a requirement for corresponding changes in present metering technology, and also the traditional, mainly manual, methods, in which meter reading is carried out. It is proposed therefore to investigate existing and potential methods for the provision of remote metering and furthermore as a result of that investigation to suggest alternatives for providing a comprehensive remote meter reading system which could cope with the demands of a privatised Electricity Supply Industry and reduce the impact of installation costs, and produce corresponding benefits like increased quality of service.

The proposed Remote Meter Reading systems researched shall offer more "intelligent or smart" services, and also give more detailed information to the customer for example. For the Utilities, additional facilities shall be proposed such that the Remote Meter Reading System provides more comprehensive management and control information, for example to remotely alter Pricing Structures to take into account cost variations introduced by the Pool, and also to provide a means whereby a service can be sold to the user on the basis of "what he needs" rather, than simply supplying a fixed volume of energy. Such a Remote

Meter Reading system should also provide sophisticated fault and maintenance management, and on-line performance assessment facilities to increase the quality of service provided.

1.1.8 The Other United Kingdom Energy Supply Industries

In addition to the electricity industry the other main United Kingdom utility providers, gas and water, are also under going similar organisational changes. The Water Industry [3] for example has until the 1 January 2000, before it must provide similar arrangements to the Electricity Industry with a corresponding amendment to traditional billing procedures which can no longer be based on rateable values. Deregulation has already commenced in the United Kingdom Gas industry and some 500,000 households in the South of England were able to select their supplier from the 1 April 1996.

1.1.9 Liberalisation of the Electricity Supply Industry in Mainland Europe

Many other countries are looking towards the United Kingdom to evaluate the effective results, and naturally any problems, resulting from deregulation of the Electricity Supply Industry. European Union ministers for example have agreed a general framework for opening the Electricity market to cross border competition. The continued failure to give support to extensive liberalisation, after more than six years of wrangling, could however rule out any positive agreement before the year 2000. Under the European Union plan about 22.5% of the European Union electricity market would be initially opened to competition, based on those users consuming more than 40 Gigawatt-hours of electricity each year. After three years, the user threshold would fall to 20 GWh a year, and after a further three years to 9 GWh, or about 32% of the rest of the European Union electricity market.

1.1.10 The Energy Supply Industry in the United States

In the USA the Energy Police Act of 1992 [2] opened the generation market to competition, allowed open access to the transmission grid, and exempted the

Independent Power Producers from regulation under the Public Utility Holding Act of 1935. The same 1992 Act also supports and encourages the Utility Services to provide Demand Side Management (DSM) programs and requires Utility Companies to precisely measure and monitor their DSM efforts. These DSM programs in the USA are similar to the developments taking place in the United Kingdom, in Remote Meter Reading, due to deregulation and privatisation. Local gas companies, in the USA, are permitted to take responsibility for the distribution of gas products in the regulated territory of a Main Gas Utility, under Federal Energy Regulation Commission Order 636. Large industrial customers of the Gas Utility now have the right to purchase gas direct from pipeline suppliers, and use the local gas utility company for transportation from the well head to customers sites, whilst paying only for direct gas transport costs.

1.1.11 A Remote Meter Reading Communications Network for the United Kingdom

In section 1.2 the possible effects of various Customer and Communications Infrastructures, which effect the provisioning of a Remote Meter Reading system, will be examined to evaluate the effect of these structures on such metering systems. One major problem with dealing with such customer infrastructures is that because of deregulation the resulting Electricity Supply network is now 'fragmented' at the operational level with new interoperator boundaries to be administered between the different RECs. RECs that had been previously integrated under the old Area Board system are now obliged to deal across more complicated operational, commercial and regulatory boundaries with other RECs.

A communications network that is associated with a Remote Meter Reading system could be the key to transcending these boundaries. One priority area of research will therefore be into the provision of such a communications network

which has the capacity to reach millions of customers using the latest narrowband and broadband communications developments, like B-ISDN, Asynchronous Transfer Mode (ATM) and the Synchronous Digital Hierarchy.

1.2 The Effect of Customer Infrastructures on the Provision of a Remote Meter Reading System

When selling the concept of a fully automated Remote Meter Reading system to Customers, the Utility companies realise that to meet expectations such a system must have more accurate billing, lead to less faults and faster repair times where and when such faults occur on the distribution network, than existing metering systems, in order to retain confidence and ultimately retain that Customer's business. In addition to the physical metering facilities the infrastructure of a Remote Meter Reading system must therefore be resilient, flexible, and have the ability to interface to a variety of Communication technologies. To evaluate the type of communications network needed to carry metering data it is necessary to review the type of Customer infrastructures that could be interfaced to such a network, since the type and size of Customer infrastructure impacts on the amount and type of data transmitted on the network. When the Electricity Supply industry was deregulated a three tier customer system was envisaged:

Tier 1:Customers with requirements of 1 Megawatt and above. (1990)

Tier 2:Customers with requirements of less than 1 Megawatt but greater than 100 kilowatt (1994)

Tier 3:Customers with less than 100 kilowatt. (1998)

One possible difference in the load requirements of these customer systems, and the related Customer Infrastructures, could be the time periods that maximum loads occur. For Domestic/Residential customers, the utility load requirements tend to vary considerably for example between 06.00 - 09.00 hrs, 12.00 - 14.00 hours, 16.00 - 21.00 hrs, weekends, holidays and dependent on seasonal variations. For Commercial and Industrial Premises the utility load requirements, in most instances, shall decrease at 18.00 hrs, as Factories and Businesses close. From a logical point of view, for example, the best time to use a Power Line Carrier based remote meter reading system to read Domestic/Residential consumption should be between midnight and 0700 hours in the morning when people are asleep, or between 10.00 hours to 1500 hours when they are at work. The reason for this is that, between these hours there is less chance of interference to a Power Line Carrier communications system from potential noise sources such as cookers, vacuum cleaners and other household appliances. For factories meanwhile the best meter reading time for the same Power Line Carrier system could be in the evening when production has stopped. In communications terms the differences between the types and classifications of customer infrastructures shall primarily impact on the type of metering device used, the physical interface needed to operate most efficiently for the transmission of metering data, the volume of metering data to be sent, the complexity of the addressing, protocols, and control mechanisms necessary to perform the overall management of a remote meter reading system.

One of the biggest problems of deregulation was caused by the Tier 2 customers who waited until the last month before deregulation took place, in 1994, before finally deciding on their supplier. This caused such a last minute rush to provide metering installations that British Telecom were unable to provide the telephone

lines necessary for connecting remote metering communications between the Pooling and Settlement Agency, the RECS, and the Customers in the time period available. A prime requirement of any remote metering system must therefore be the provision of readily available communications infrastructures, preferrably already universally connected to every customer, or able to be connected quickly, to realise rapid implementation of a remote meter reading facility.

1.3 Communications Infrastructures

The introduction of metering devices for the measurement and display of electrical, water and gas services data, has seen much research by the Utility Companies, who provide these services, to replace the manual recording and collation of such metering data, with centralised Remote Meter Reading systems, preferably using associated automated processes for such activities as billing.

In providing such Remote Metering systems, although the prime motivation is economic, for example, in terms of a physical reduction in the number of meter reading and other administration staff, additional benefits can be provided in terms of system flexibility and administration, in that:

a. Site access problems to Customer's Premises are non-existent once a suitable and reliable communications infrastructure is in place.

b. Metering devices can be individually identified via the communications network, monitored, problems detected and rectified almost instantaneously

c. Demand data is available on a real time basis for discussion, possible future requirements, and to resolve customer disputes.

d. Real-time time keeping and control is available.

In order to provide such Remote Metering systems, a comprehensive communication network, for the transportation of metering data, from the Customer's measuring device to one or a number of centralised locations is required. Customers connected to the network must be uniquely identified, as in a telephone network. The network must indicate to the collection centre the availability or otherwise of a path to the Customer, and must protect the connection, from collection centre to customer, from internal or external interference, for the duration of the connection. A Remote Metering Data communications network must be dimensioned to be economic and capable of expansion.

A communications network used to support a Remote Meter Reading System could be based on a number of transmission systems technologies. To provide the most efficient communications system it is proposed to research and examine the types of communications systems available, and also several designs and applications using past, current and future technologies (ATM, SDH, Wireless in the Local Loop), which, using one, or a combination of techniques, could meet the requirements for the transportation of metering data, taking into account such features as safety, economy and reliability. The communications systems to be investigated are:

a. Telephone Line - Copper and/or Fibre Optic(Includes ISDN, POTS and other networks).

b. Power line carrier

c. Radio transmission/reception networks.

Since the cost of providing such a Remote Meter Reading System communications network must be minimised, any proposed architecture should make the best use of any existing facilities already available to the Utility Companies in order to avoid the types of problems, like a shortage of telecommunications connections that occurred in 1994. Particular emphasis is therefore put on using Power Line Carrier for the Customer Access Network of a Remote Metering Data Communications network.

Power Line Carrier may not appear an obvious choice for the Customer Access Network of a Remote Metering Communications Network, but similar experience has shown the new Public Telecommunication Operators that in providing an alternative telecommunications service, to the existing Operator, that the Customer Access Network, the final link from the main transmission network to the Customer's Premises, has been the most expensive and difficult to implement. This is borne out in the United Kingdom, where despite extensive deregulation, over 97% of the country's approximately 28 million exchange lines were still controlled by a single supplier, at the end of the financial year 1993/1994.

The reasons for using Power Line Carrier are substantial. For the Regional Electricity Companies (RECs), the means of providing a Customer Access Network already exists, with the means to access the majority of businesses and domestic residences, via Power Lines. By using Power Line Carrier based systems, in addition to minimising the cost of using a third party telecoms service

provider, the Regional Electricity Companies also avoid the need to create a Customer Access Network *ab initio*. Through not having to implement an infrastructure involving large amounts of telecommunications outside plant (cabling, trenching, equipment rooms, distribution points), and the subsequent maintenance costs incurred once that new plant is installed, the Regional Electricity Companies can save much of the cost involved in the provision of a remote meter reading communications network.

Power Line also represents a very substantial proportion of the assets of any Regional Electricity Company and as all customer services ultimately rely on this part of the distribution network, its use should be optimised as much as possible.

For the provision of a Remote Meter Reading System Customer Access Network, the development of a Power Line Carrier based system is suggested as being of fundamental economic importance to the Regional Electricity Companies. Since the relevance of Power Line Carrier systems to Remote Meter Reading, in terms of the potential economic and technical benefits that could be accrued, is considered important, associated characteristics, such as modulation, data rates, and other parameters will also be investigated, in order to fully define this importance in the development of any Remote Meter Reading communication network topologies.

In following general communication network topologies, the networks proposed for the transportation of metering information data, from the Customer's Premises, to a number of centralised or local collection points, shall be termed the Remote Meter Reading System Customer's Access Network (CAN). Where the data is then communicated from several such collection points to a Main or National

Metering Data Collection centre, the communications network shall be termed the Remote Meter Reading System Transport Network.

In association with the Remote Meter Reading System Customer's Access Network (CAN) it is clear that the communications interface between the meter and the CAN is of great importance. In section 1.4 possible meter communication interfaces, data rates and associated topics relevant to the meter itself, are therefore examined in more detail.

1.4 Meters

There has been a great deal of discussion about how the development of metering devices should proceed [3,5,51,52,53,54,55,56,57,58,59,60,61,62,137]. In many ways the Utility companies in implementing a Remote Meter Reading system face a similar problem to that the computer industry faced ten or fifteen years ago, where much of the emphasis on computer design switched from large centralised computer systems, to the communications interfaces of the computer and most importantly the accessibility to data and information through those interfaces, by remote users. The situation with metering devices is very much the same today. It cannot be disputed that the traditional design of present meters, based on the Ferrarris disc, has provided excellent service to the Regional Electricity Companies. However there is now such a demand for meters with more complex communications interface and other functions that the need for the compactness provided by the traditional meter designs has been superseded by many other requirements, many of which relate to the provision of a Remote Meter Reading system.

Meters used by Regional Electricity Companies can generally be put in two separate categories. The first class of meters are those used to operate or monitor the elements of an Utility company's distribution system. The second category concerns those meters mainly used for revenue or billing purposes. It is the second class of meter, the revenue meter, which is considered in this thesis. Since Power Line Carrier is proposed as the main medium for Customer Communications the principle of meters used in the electricity industry is explained in some detail. For example, at present the operation of most meters in the electricity industry uses the interaction of two (or more) magnetic fields to produce rotation of one of the elements. The basic meter used for measuring electricity also normally includes an ammeter for measuring current in amperes, a voltmeter for measuring electrical pressure in volts, and a wattmeter for measuring power in watts.

1.4.1 Revenue Meters

Data accumulated by the Revenue or Billing meters can be useful in planning and designing distribution networks. The same process that translates meter readings into bills for consumers could also be programmed to make information available such as converting consumption data into potential loads likely to occur on the distribution network. In the electricity industry, meters for billing purposes normally measure energy used in kilowatt hours and power demand in kilowatts. Although constructed differently they have both current and potential coils and are connected in the same manner as watt-hour meters.

1.4.2 Watt-hour Meters

The basic watt-hour meter consists of a small motor whose rotor, usually a metallic disk, is turned by the torque produced by the reaction of the magnetic fields set up by the current and voltage, supplied from the Low Voltage Distribution Network, passing through coils. The speed of rotation of the disk is

made proportional to the power flowing in the coils of the meter. To ensure accuracy the speed of the disk is regulated by a "magnetic brake". A register counts the revolutions of the disks and acts as an integrator to calculate the instantaneous values of power over a period of time; the result of the integration is normally the expression used for the energy.

Watt-hour meters may be single or poly phase. The single phase unit is normally the one employed for measuring energy usage by domestic customers.

1.4.3 Industrial Metering

For most industrial and commercial customers the reactive load is also measured in kVA-hours along with kilowatt-hour consumption. By relating the kVA-hours along with kilowatt-hour consumption for the period of usage a value for the average power of a customer's load is obtained.

1.4.4 Load Monitoring

Normally the individual consumption of customers supplied from the same distribution transformer are summed to obtain the total energy supplied through that transformer over the billing period. This total is then converted to give an approximate demand in kW or kVA so that the loading of the transformer can be monitored. In conjunction with this the consumption supplied from each distribution transformer can be used to produce average figures of usage by each customer and possibly to identify those transformers that could be exceeding predetermined load values thus enabling the utility concerned to instigate appropriate remedial action.

1.4.5 Future Meter Development

The reduction in the price of electronic components has made the meter more than just an instrument to be used for billing purposes. By the addition of memory and a microprocessing capability the functions of a meter can be expanded to provide valuable data to the Utility company concerned. By using a microprocessing capability it is possible to control such features as individual consumer loads. Such "electronic" based meters make the remote reading of customers meters and billing almost instantaneous.

The following section details the proposed functions of such a future meter that could be suitable for deployment in both a local and remote meter reading environment. The implied functions are not used to suggest any particular design. This particular representation provides a simple means of conveying information on the interfaces, facilities and overall functionality likely to be required by such a meter. Ideally, in order to simplify transmitting and receiving metering data over any communications network, to distant locations, it would be beneficial to provide an identical metering device, with variations, for the type of utility service, provided. Figure 3 suggests what the design of such a meter could be. The meter shown in Figure 3 consists of an 8 bit micro-computer, 32 Kbytes Random Access Memory (RAM), 32 Kbytes Read Only Memory (ROM), a display, transmitter/receiver, interface circuit, tamper-proof sensors, and power supply.

Battery back-up is provided to store essential information in the event of mains power supply failure. An 8 bit micro-computer is used to access pre-stored instructions in ROM and execute them to perform pre-specified functions of the meter. The Random Access Memory stores the measured data of the meter.

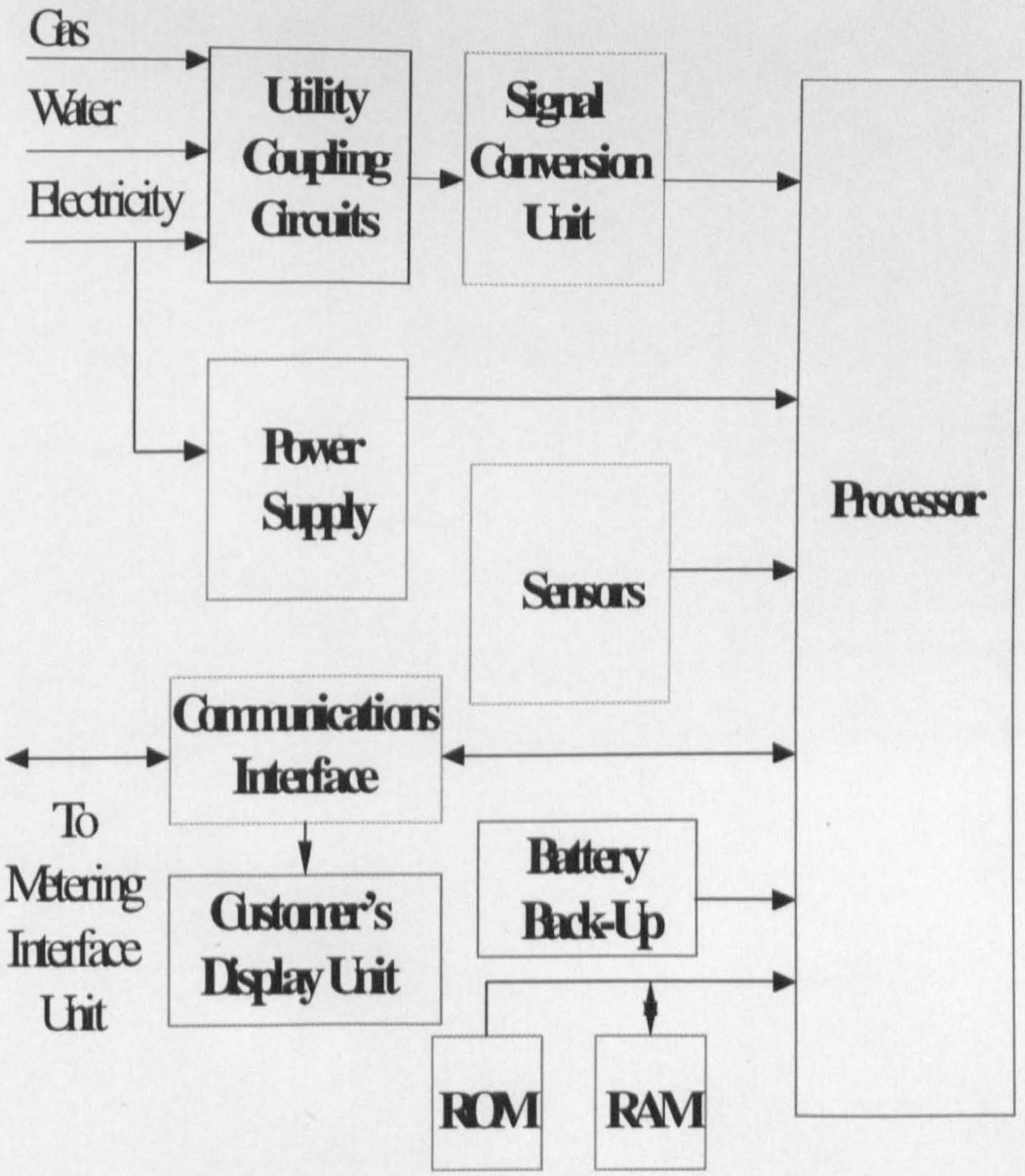

Figure 3 - Universal Meter

1.4.6 Metering Interface Unit (MIU)

Economically, technically, logistically, and possibly also commercially, such an Universal metering device may be an unattainable goal. One alternative solution, could be the provision of a common Remote Metering System Communications Interface, as shown in Figure 4. Such an approach has many advantages. For instance the meter itself would not require large areas of memory to contain the software necessary to interface to a variety of communications systems or to handle different protocols and its cost could therefore be minimised. (This topic and its relationship to communications protocols suitable for remote meter reading

is further developed in sections 2.8 to 2.11.) Such a Remote Metering System Communications Interface, called a Metering Interface Unit (MIU) in Figure 4, could be used to connect any of the three major Utilities independent metering devices to a Remote Meter Reading system Customer Access Network termination point. By using such an approach it should be possible to interface any Metering device to a variety of communications media.

Which ever of these two approaches, direct communications with the meter or via a Metering Interface Unit, is used, remote meter reading will cause an impact on the price of typical metering installations. In the Electricity industry, for example, at present a typical installation in a domestic premises can cost around £100 [1,3, and 5]. Providing remote meter reading facilities will obviously affect this installation price but by adopting the Metering Interface Unit approach, possible software development and equipment costs, and the subsequent impact on installation prices could be minimised.

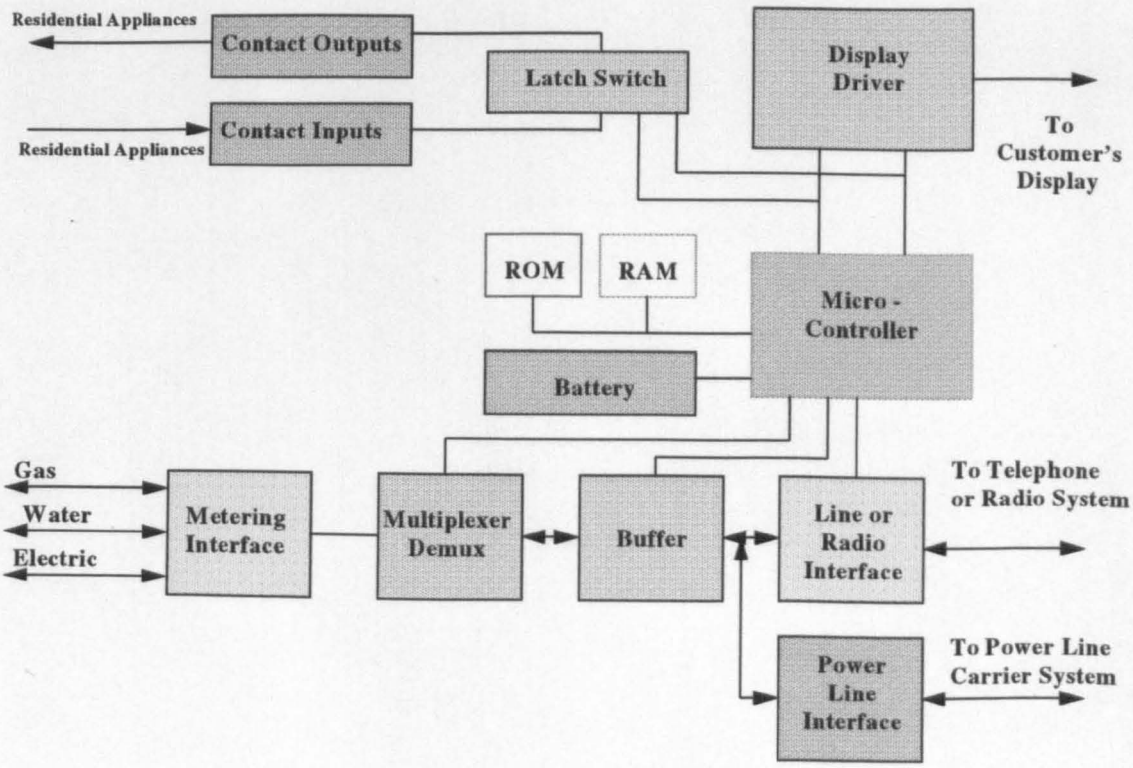

Figure 4 - Metering Interface Unit (MIU)

1.4.7 A Practical Realisation of a Metering Interface Unit

In section 1.4.6 the proposed implementation of a Remote Meter Reading communication system using a Metering Interface Unit was suggested. There are many possible variations on this implementation. For example Billington [9 and 24] provides details of the implementation of a Mainsborne [Note: Mainsborne is a registered Thorn-EMI trademark] Telecontrol system which in addition to providing remote meter reading facilities also provides effective load management and gives each customer local control and monitoring facilities of the services provided by the utilities.

In the Thorn-EMI system the Metering Interface Unit is analogous with an Energy Management Home Unit (EMHU) located in the customer's premises. The EMHU communicates with a Central Controller (CC) which is located in a local transformer chamber. The CC in turn communicates with a Data Control Centre (DCC). A Customer's Display (CD) is also provided.

The operation of the Thorn EMI system can be summarised as follows:

The EMHU is interconnected to the single phase electricity, water and gas meters, which are adapted to provide consumption data. From the EMHU communication can be established using three spread spectrum mainsborne (one for each phase) signalling modules. This allows the EMHU to transmit and receive data from the DCC.

The EMHU has also a Contactor Unit which contains two contactors, controllable by the EMHU that could be used for either routine and emergency load control.

The DCC is also connected to the Public Switched Telephone Network (PSTN) via BABT approved full-duplex modems operating at 2400 baud. The modem has both auto-dial and auto-answer facilities which allows the CC to both initiate and answer calls.

The CC has also six inputs which are regularly monitored and can also be configured to perform an action upon change of state to an input and for example cause a broadcast command to be sent to all EMHUs.

Network management facilities can be provided locally at the CC through an RS-232c interface and Local Terminal or remotely by using a modem connection to the DCC. The basic architecture of the Mainsborne Signalling system is shown in Figure 5

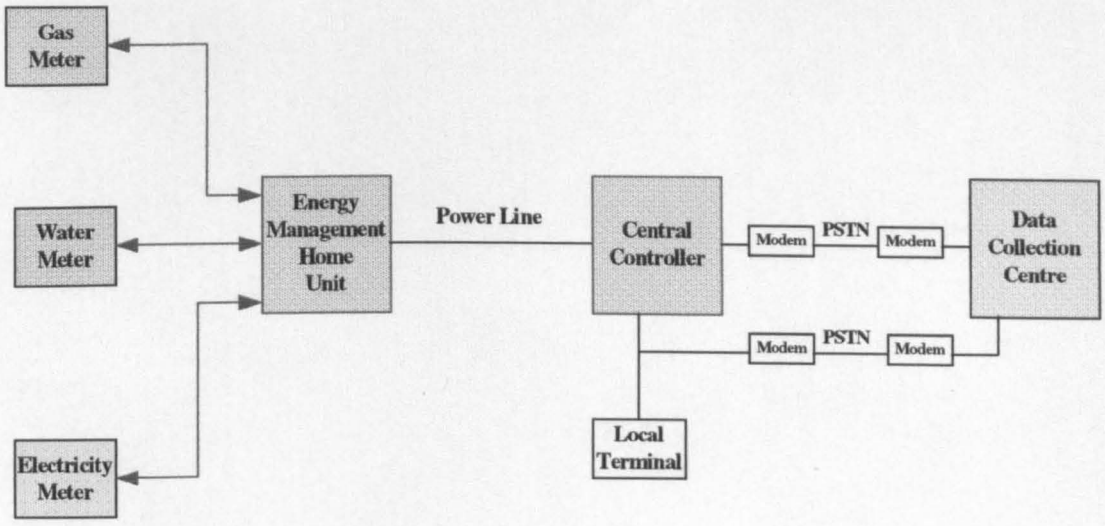

Figure 5 - Thorn-EMI Mainsborne Signalling System

One of the main factors affecting the development of a Remote Metering System, and the associated metering device or devices, is the amount and type of data [5,10,14,22,23] the meter shall be required to handle. This subject shall be examined in more detail in Chapter 2.

1.5 Previous Trials of Remote Meter Reading Systems

In mainland Europe considerable work on Automatic Remote Meter Reading Systems [9,10,11,12,19,20,22,24] has been carried out. Initially this research tended to concentrate on broadcast type systems with data only being transmitted one way, from the meter. Recently however, more emphasis has been put on developing two way communications with the meter, usually from a suitably located Central Collection system. Sections 1.6 and 1.7 review some of the research carried out on such systems, and comments on two previous trials, using two different communication architectures,.to provide Remote Meter Reading, and the results obtained from those trials. Following this review and comment, proposals are submitted on how, by using more modern techniques and developments in the communications fields, an alternative and more comprehensive solution to the problem of developing an Automatic Remote Meter Reading System and its associated communications network requirements may be available.

The trials reviewed in sections 1.6 and 1.7 were carried out over a number of years, and include the use of two completely diverse communication technologies, radio and power line carrier.

In the United Kingdom [9,19,20,22,24], Europe [10,11,12] and the USA [5,137] low cost electronics and corresponding advances in communications have

provided scope for developments of new methods to read a Customers Gas, Electricity and Water meters without physically visiting the user's premises. Trials on remote meter reading by the Regional Electricity and meter manufacturing companies involving different communications technologies have been ongoing in the United Kingdom since the late 1970s.

In the USA the priorities of the Utility Companies leading the development of Remote Meter Reading systems have however been slightly different. The Automatic Meter Reading Association through its surveys suggest the Water and Gas Utilities are further ahead with trials [48] than the electricity utilities. Such systems include the Meter Communication System (MCS) [2,48].

The reasons the Gas and Water industries are so active in the USA are ergonomic as well as economic. Compulsory regulations have forced the utilities in the USA to bill monthly, and these regulations usually forbid the use of estimated bills even where access could not be made to a building to make a meter reading. Most Electricity meters in the United States are mounted externally and do not have the same problem with accessibility, whereas about 50% of Gas and Water meters are mounted internally, which creates the problem of sometimes being able to produce the meter reading in conjunction with the bill. Furthermore, unlike the Electricity industry, most United States Water and Gas Meter registers can be removed from meters in the field without the meter being returned for recertification [48, 70, 110, 137]. This makes the retrofitting of register encoding circuitry much easier. Electrical Utilities in the USA have not ignored remote meter reading however, and although they do not have the same difficulties as their Gas and Water counterparts, they are still intending to, and presently actually trialling [2,48,50], similar Meter Communications Systems.

1.6 The TANGENT Scheme

In the United Kingdom, the frequency band 183.5 to 184.5 Mhz, detailed in Ministry of Post and Telegraph (MPT) regulation 1328, has been allocated to the Utility companies for the provision of remote meter reading facilities using radio. The Tangent scheme [7] was one such radio based remote meter reading system.

The Tangent Scheme was intended to gather metering data from up to 1000 electricity users and transmit the data, via radio, to a Data Collection Centre. The metering unit, consisted of a dedicated radio transmitter and integral antenna, both physically located within the power meter (Collectively known as the MTA). The transmitter had an RF output power of 10 mW and transmitted the consumption in KWhr units at random times. In the operation of the Tangent scheme it was envisaged that to achieve a reliable, error-free range of 700 metres, the radio receiving equipment would have to be installed at a number of conveniently located electricity supply distribution substations which would become Centralised Data Collection Centres. At these Centralised Data Collection centres, two separate radio receivers, with pole mounted antennas used in a spatial diversity configuration, were employed to improve systems reliability. To provide for higher meter densities it was proposed that up to 20 such receivers may be required per Data Collection Centre. In addition to the radio receiver, equipment was also required for storing, interpreting the incoming data, and forwarding it, over radio or telephone line, to a higher system level.

A practical trial of the Tangent system was carried out in a number of urban areas such as the Barbican in London, whilst rural trials were carried out in Pitlochry, Scotland and other areas.

The TANGENT trial raises a number of points regarding the provision of a Remote Meter Reading Radio Communications Network.

- The frequency range, channel bandwidth and signal to noise plus distortion ratio characteristics of the radio system directly influence the success, or failure, of Remote Meter Reading Radio Communications Networks.

- The Tangent scheme used one way transmission and it was impossible to verify correct reception of the transmitted data. Data collision was avoided as much as possible by the use of different transmission times. Two way transmission, duplex operation, could offer more efficient radio remote meter reading systems.

- As the number of meters increases would one way radio remote meter reading transmission schemes become more inefficient.

- The optimum transmission distance for the Tangent system was found to be approximately 700 metres. This range could be difficult to achieve in some demographic areas, without the deployment of large quantities of equipment to give the necessary coverage.

Trials and practical operational experience in the USA [48], using similar radio based remote metering schemes already seemed to indicate that using higher frequency bands, such as the UHF (300 to 3 GHz) band, gave better overall performance than the VHF bands (3 to 300 Mhz). Although the band 183.5 Mhz to 184.5 Mhz has been allocated to radio remote meter reading schemes, and was

used during the trials of the Tangent Scheme, the 800 to 900 Mhz frequency range could be a more suitable band for radio remote meter reading.

Aside from the findings in the USA, it is not insignificant that this band has already been allocated to Cellular radio systems in the United Kingdom and in other European countries. It should be recognised that Utility providers who intend to use radio based meter reading systems on a Universal Basis have as great a requirement as the cellular radio operators, and that with a potential customer base of 23 million users, serious consideration must be given to the provision of a more suitable frequency range, for such radio based remote meter reading systems.

Alternatively, perhaps an arrangement could be made with the Cellular phone companies, who already have the necessary equipment sites, and almost universal radio coverage, on the possible allocation or use of some of their channels to be used in a radio remote meter reading system. With the extensive usage such an arrangement could have suitable tariffing structures could be arranged between the Cellular radio companies and the Utilities concerned.

The advent of more modern radio technology, such as Broadband Radio Delivery systems, Wireless in the Local Loop (WLL) or the use of GSM, could be more economically and technically viable, than systems such as used in the Tangent trial, in providing remote meter reading by radio. These radio technologies and their possible relevance to remote meter reading are discussed in more detail in sections 4.7 to 4.11.

1.7 Two Way Distribution Line Carrier Technology for Remote Meter Reading and Controlling Dynamic Tariffs: Field Experiments in Finland 1990

1.7.1 Introduction

In 1990 a two way remote load and tariff control system using Power Line Carrier techniques was trialled in Finland [11]. The configuration of the system, called the MELKO system, is detailed in Figure 6. The Melko system was designed such that a load control and metering device, located in the customer's premises, would pass metering data to a Centralised Data Collection Unit, located in an 110/20 kV Electrical Substation, using a Power Line Carrier Communication system. The Substation could then be connected via telephone or radio to a Main Collection Centre which controlled the operation of the system using a computer called the Data Dispatch Computer (DDC) whose prime function as the name suggests is to control the dispatch or flow of data.

The Substation Unit served as the interface between the Data Dispatch Computer (DDC) and the Customer Premises equipment. The substation unit also provided a centralised clocking/synchronisation signal if needed. The Customer Premises meter was used for time of day and tariff demands, recording energy and power consumption, transmission of recorded data and surveillance of loading. The control units co-located with the meters were used to control the meters, heating and lighting loads, time switches, and to separate loads and devices where no information feedback was required. The control unit could be pre-programmed if needed.

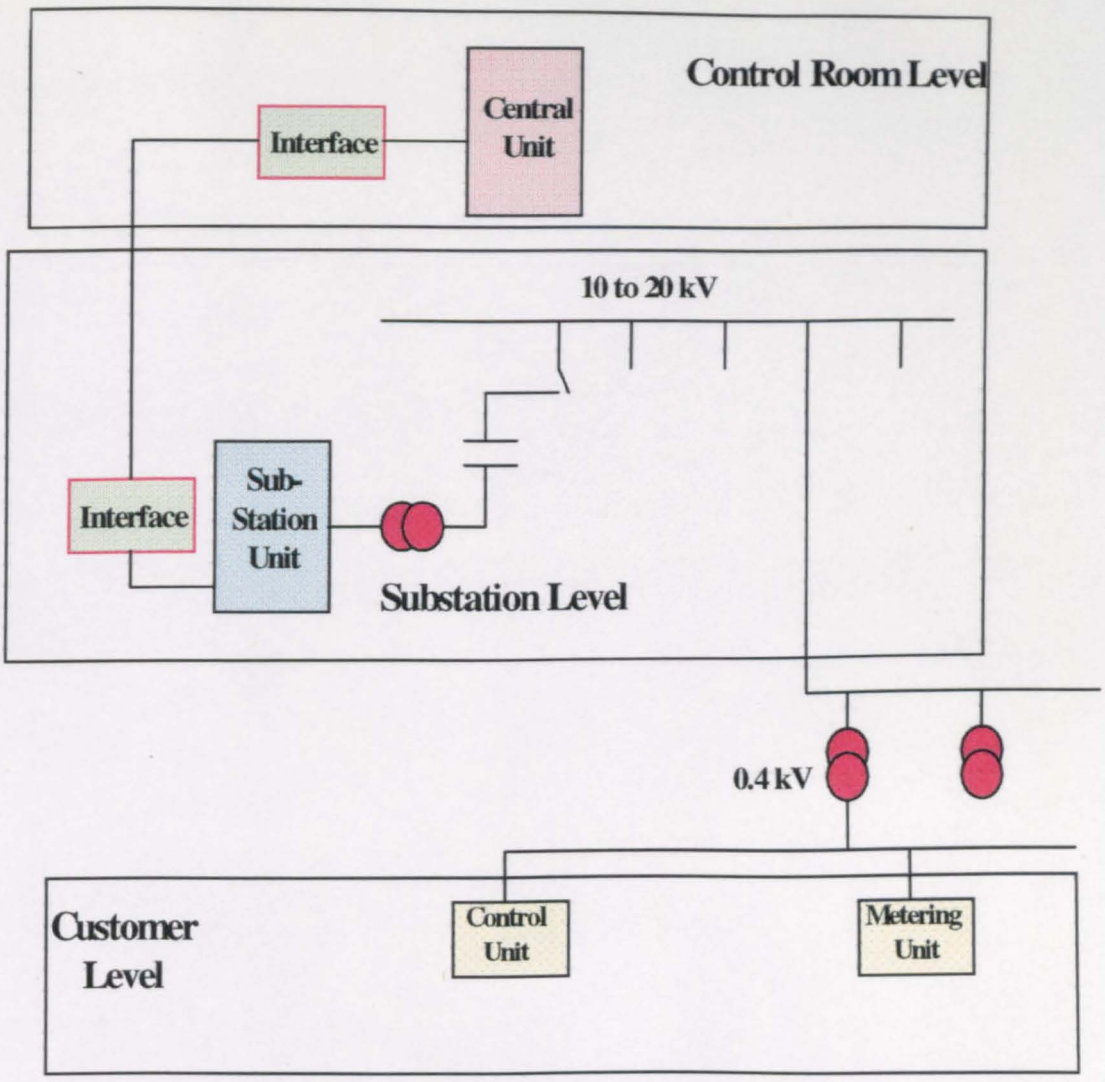

Figure 6 - The Melko System

The Power Line Carrier communication system between the Customer's Premises and the substation used Phase Shift Keying, at a data rate of 50 baud, to transport metering data. Remote meter reading normally took about 10 seconds per access. The communications link between the substation and the Main Collection centre was normally provided by a serial modem, utilising asynchronous communications in accordance with IEC TC57 (Power Systems and Associated Communications). The data speed was selectable between 150 to 200 baud. One of the main problems the design of the system had to overcome revolved around the fact that there are some 130 independent utility companies in Finland each of which used different pricing structures. The message format developed for the Melko system therefore

had to include an Unique Identifier for each individual Utility Supplier. Data and error bits were also included in the Message Format which is detailed in Figure 7. The Response Message Format of the Customer's Premises Metering unit is also detailed in Figure 7.

Energy Supply Company's Individual Identification	Group or Individual Address of the Terminal Unit	Relay Control or Register Reading Command	Error Detection Bits (CRC)

Command Word

Individual Address of the Terminal Unit	Register Reading Command	Transmitted Data	Error Detection Bits (CRC)

Response Word

Figure 7 - Command and Response Words

Project measurements of the trial system were carried out at the times of 7 - 9 am and 3 - 5 p.m. Only the initial attempts at remote meter reading were taken into account although the system makes several "read" attempts if it does not receive a response the first time. The results of those attempts are detailed in Table 2.

Metering Unit No:	Meter Reading Attempts	Failed Attempts	Successful Readings as %
1	1467	5	99.7%
2	1421	6	99.6%
3	1873	13	99.3%
4	1422	35	97.5%
5	1652	32	98.1%
6	1825	4	99.8%
7	1784	8	99.6%
8	1722	40	97.7%
9	1433	12	99.2%
10	1879	24	98.7%
11	1971	3	99.8%
12	1681	1	99.9%
13	1635	4	99.6%
14	1682	2	99.9%
15	1697	14	99.2%
16	1683	3	99.8%
17	1705	3	99.8%
18	1658	2	99.9%
19	1704	0	100%
Transformer	2143	83	96.1%
Total	34037	295	99.1%

Table 2 - Melko Trial Results

From Table 2 it is apparent that the amount of successful metering read attempts against failed read attempts, indicates that the type of Remote Meter reading system used achieved a high degree of success during the trial. In evaluating these test measurements however there are a number of additional factors which need to be considered in order to further quantify the success of the trial.

- The data format used for transporting the metering data appears to have been very effective, and proves, that it is possible for as many as 130 utility providers to provide an acceptable service to a diverse amount of users.

- The metering data transmitted was Time of Day or Demand Tariffs, Recorded Energy and Power Consumption, Transmitting Recorded Data, and Surveillance

of Loading. For many utilities this type of data may be regarded as only a limited subset of the metering and associated information they require. For example the type of additional data which might be considered useful in a Remote Meter Reading System could be Next Bill Projection, Credit Control, Fraud Detection, Network Management, Remote Disconnection/ Connection.

- The number of users sampled was also relatively small, and the amount of failures may have risen with an increased number of user samples. One possible reason to make this assumption is that the data rates used in the trial may be too slow to cope with an increased volume of transmitted metering data from large numbers of users.

- With a large volume of customers telephone charges would rise accordingly and a radio system may require an inordinate amount of nodes.

The Melko trial does indicate however that it is possible to successfully implement a Remote Meter Reading system using Power Line Carrier for a Customer Access Communications Network and radio/line communications systems for the Transportation Network if required.

1.8 Previous Trial Results

A number of questions have been left unresolved by the Melko and Tangent Remote Metering trials.

- What modulation system is best suited to Power Line Carrier operation.

- How does the varying impedance, noise and delay distortion known to exist on the Low Voltage Distribution Network, affect the measurements of performance of a Power Line Carrier based remote meter reading system. Does this reflect on the type of communications architectures which could be successfully used in Remote Meter Reading Systems.

- For Power Line Carrier based systems, could "repeater devices" be used, as in other transmission technologies, to enhance the distance of operation of a Remote Meter Reading System.

- Only limited amounts of users have been involved in the trials. How shall relatively low data rates used in many trials, 50 to 200 baud in most instances, cope with the large amounts of potential users likely to be involved in a practical Remote Metering system environment.

- How could the protocols, presently used, or proposed for use in remote metering systems, be shaped to cope with these potential large amounts of users.

- What should be the criteria used to evaluate the suitability of a protocol used on Remote Meter Reading systems.

- How can Remote Meter Reading systems take advantage or be adapted to interface to the more modern transmission technologies, Broadband-Integrated Services Digital Network (B-ISDN) or the Synchronous Digital Hierarchy (SDH), which have become available since.

These subjects could affect the method of Remote Meter Reading communications used in a potential United Kingdom Electricity Supply Industry market of 23 million customers and are researched in detail in Chapters 2, 3 4, 5, 6 and 7

1.9 Current Assessment of Remote Metering in the United Kingdom

In sections 1.1 to 1.8 it has been shown that in the United Kingdom where the deregulation and privatisation of energy related services has already taken place, the providers of the main Utility Services, the Gas, Electric and Water Companies, are now under increasing pressure, from government, businesses and domestic customers to provide their services in a different manner to the way they have previously provided them. They are having to address additional concerns, including not only the new found freedom of customers to choose the most economical supplier, but in the planning, operating, accounting, and maintainance of the profitability of the Utility service they are providing.

The factors now involved in the provision of an Utility service have changed such, that it has been recognised, to respond to customer demands, and still provide economically viable services, there is a requirement for a more flexible and dynamic billing system.

Remote metering and its associated communications network have been suggested in this chapter of being of fundamental importance in the provision of such a flexible and dynamic billing system. An even more compelling reason however for the deployment of Remote Meter reading systems, may be for assisting the controlling and maintaining of profitability.

It has been shown [133] that for one REC, operating profits from supply fell from 16.9 million pounds in 1994, to 14.2 million pounds in 1995, because of higher than expected electricity costs. The fact that distribution profits also declined due to the reduced charges made by the company, at the request of OFFER, suggests that one major way, for the Utilities, to provide successful management and control of Pricing Structures, is through a Remote Meter Reading system. Such a system for example could also take into account cost variations which can be introduced by the Pool and also provide a means whereby a service can be sold to the user on the basis of "what he needs" rather than supplying a fixed volume of energy. A Remote Meter Reading system is therefore also suggested as being one of the most important aids in monitoring and maintaining the profitability of any Regional Electricity Company.

Chapter 2. Data and Communication Network Protocols

2.1 Introduction

One of the main issues that occurs in Meter Communications using the Low Voltage Distribution Network is the type, and efficiency, of communications protocols that could be used. A number of design decisions affect the choice of protocol, for example whether data connected with metering should only travel in one direction, simplex communication, or in either direction but not at the same time, half-duplex communication, or in both directions at the same time, full duplex communication. The protocol must also determine how many communication channels, in logic terms, a physical connection corresponds to and what the priorities of those channels are.

Data flow is also important and any protocol used in Remote Meter Reading should be able to stop a faster transmitter swamping a slower rate receiver. In conjunction with data flow error control is also important because the physical medium of a Low Voltage Distribution Network is not perfect, as will be shown in sections 3.1 to 3.6, so errors can occur.

It would be impossible to provide for interconnection, on a Low Voltage Distribution Network, by separate physical connections to each user, as the Low Voltage Distribution Network is a bus or tree structure. To set up a separate connection for each user on a Low Voltage Distribution Network therefore, one of the main tasks of the protocol concerned must be to control the flow of a number of unrelated metering data streams over the same physical connection.

For Remote Meter Reading in the 100 kW market, using a second tier supply system, [6], as shown in Figure 8, wide area communication networks shall be required.

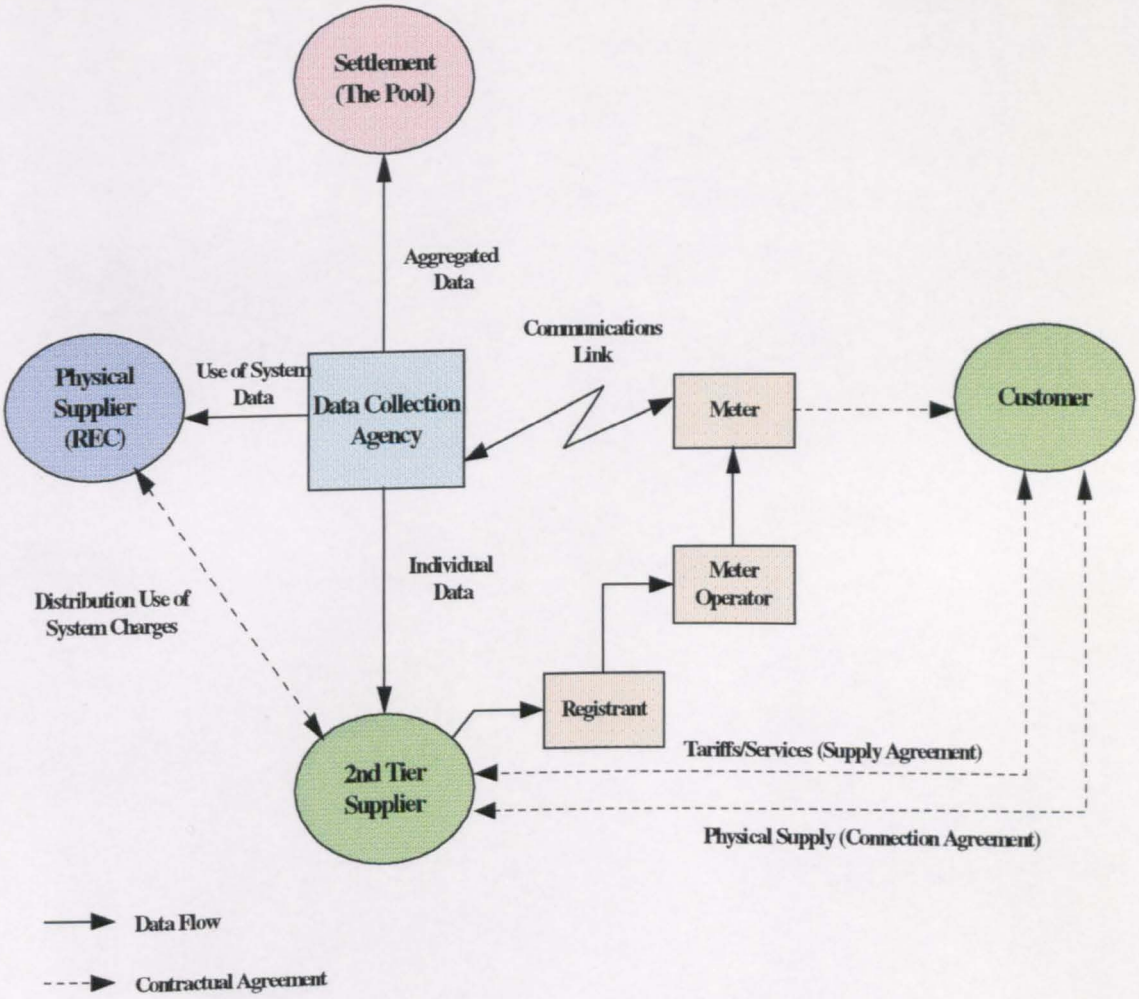

Figure 8 - Metering for the 100 kW Market [6]

Wide Area Networks normally use a system architecture, as shown in Figure 9, consisting of geographically dispersed nodes interconnected by means of communication Transmission or Transport Networks. The Customer is normally interfaced to such Transmission Networks by a Customer Access Network. Within the framework of such a Wide Area Network the software and the protocols used to operate the individual communication components (Network Elements), including meters, of a Remote Meter Reading system, shall also play a very

important role. It shall be this software and protocols that ensures the relative degree of flexibility and configurability of the system.

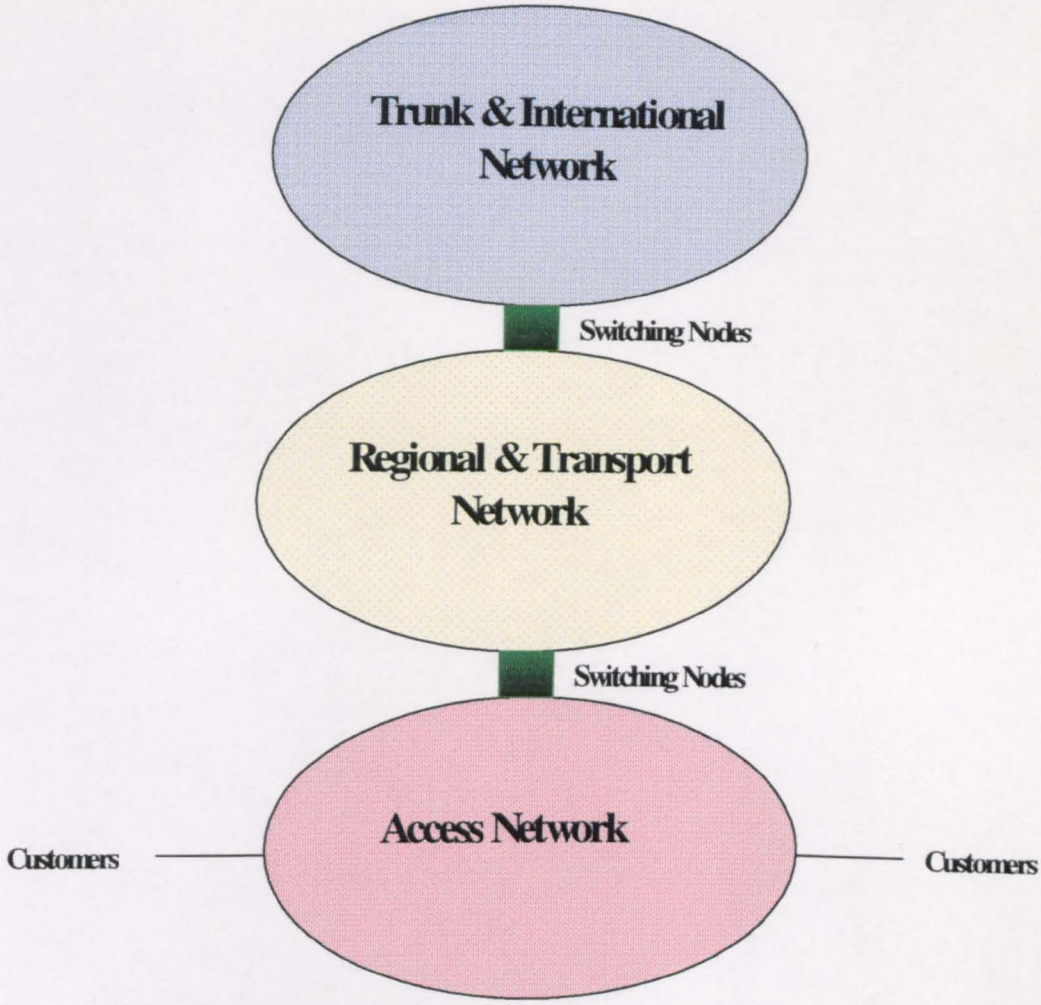

Figure 9 - Generic Wide Area Communications Network

To reduce the design complexity of such a Wide Area Remote Meter Reading Network it is proposed that the network should be designed as a series of sub-networks or layers, with each higher level sub-network being built upon a lower level subnetwork or preceding layer. The set of layers and the protocols associated with them is what will actually determine the effectiveness of the network architecture of a Remote Meter Reading communications network. The interfaces of the Network Elements which physically compose the sub-networks and the systems architecture need not necessarily be the same, provided that each element

can correctly interpret and use any relevant protocols. Although the electricity distribution network is primarily intended to distribute electricity it can be seen from Figure 10 that its interconnection principle is analogous to many other wide area communication networks, including that shown in Figure 9.

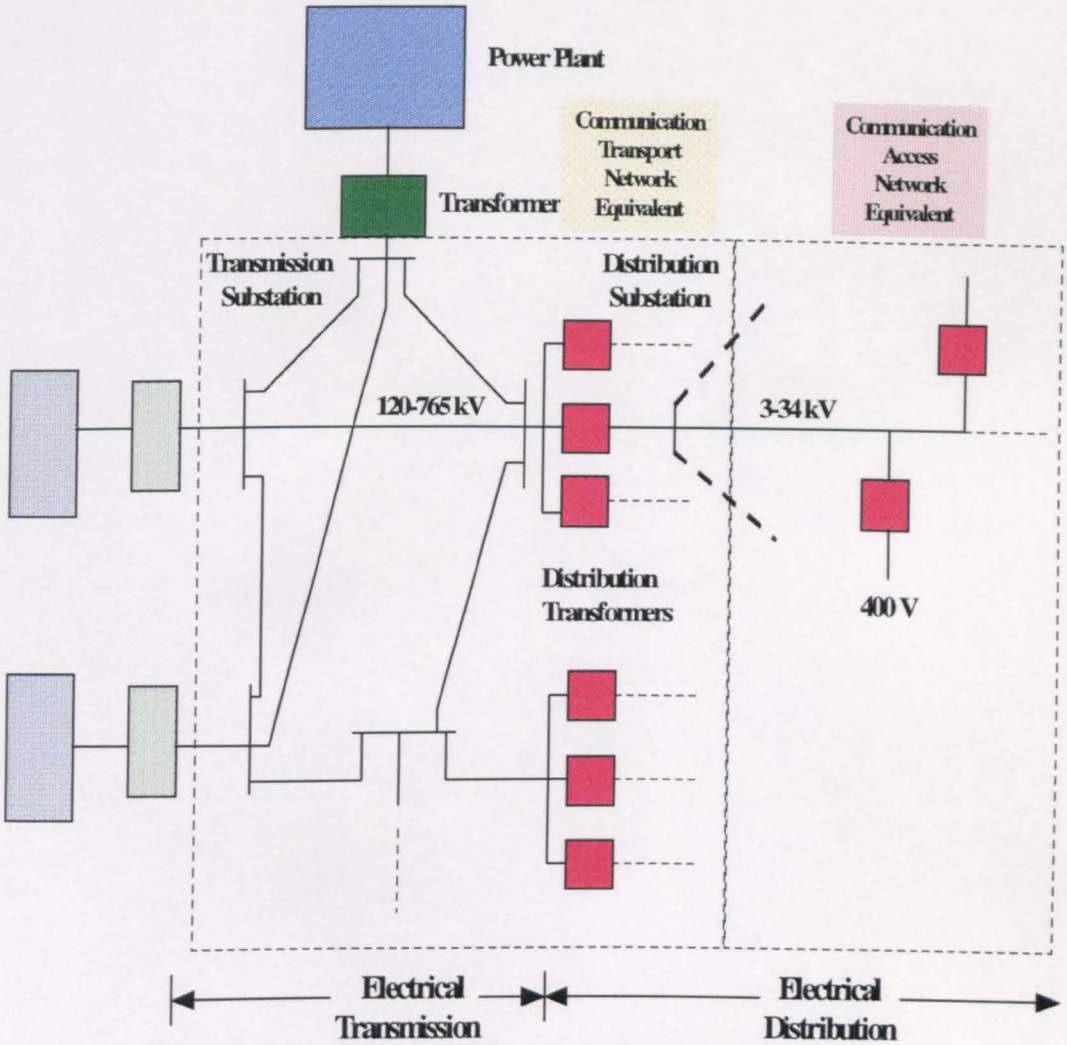

Figure 10 - Generic Electrical Distribution Network

Generation
Generation is the conversion of primary energy sources into electricity

Transmission
Dependent on the country involved, electricity is normally generated at levels of between 175 kV to 765 kV (275 kV to 400 kV in the United Kingdom). Transmission is the bulk transportation of electrical energy from power stations to

the companies who are responsible for distributing it. In England and Wales electricity is transmitted round a National Grid system.

Distribution

Distribution is the transportation of electricity from the transmission network to the customer. The Public Electricity Companies or Local Suppliers convert the voltages of 275 kV to 400 kV to lower levels before connecting to a Customer's Premises. In the United Kingdom, as shown in Figure 11, these voltages are reduced via the intermediate steps of 132kV/33kV to 230 Volts for domestic customers, and 415V or 11kV for industrial customers.

In order to provide a Remote Meter Reading system, any communications or protocol architecture associated with that system, which proposes to use the electrical distribution network shown in Figure 11, should be developed, in compliance with the principles laid down in the Open Systems Interconnect (OSI) 7 layer model.

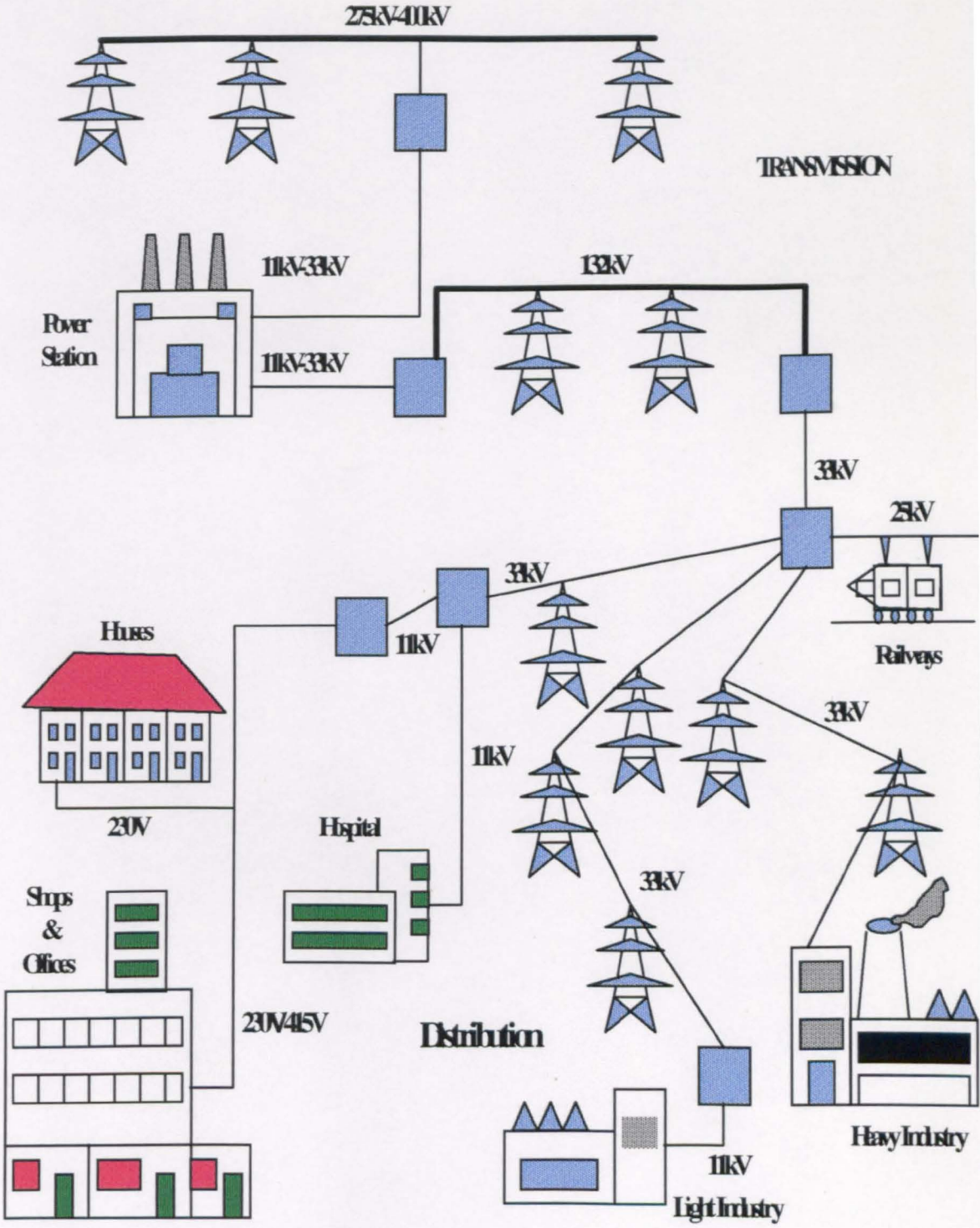

Figure 11 - United Kingdom Electricity Supply Industry

CENELEC TC205 through European Standard, prEN 50090-2-1, Home and Building Electronic System, HBES Part 2-1: System Overview Architecture [32], already supports a seven layer model, shown in Figure 12, which is compatible with the OSI 7 layer model. The model of the Home and Building Electronic System, shown in Figure 12, is explained in more detail in Section 2.3.

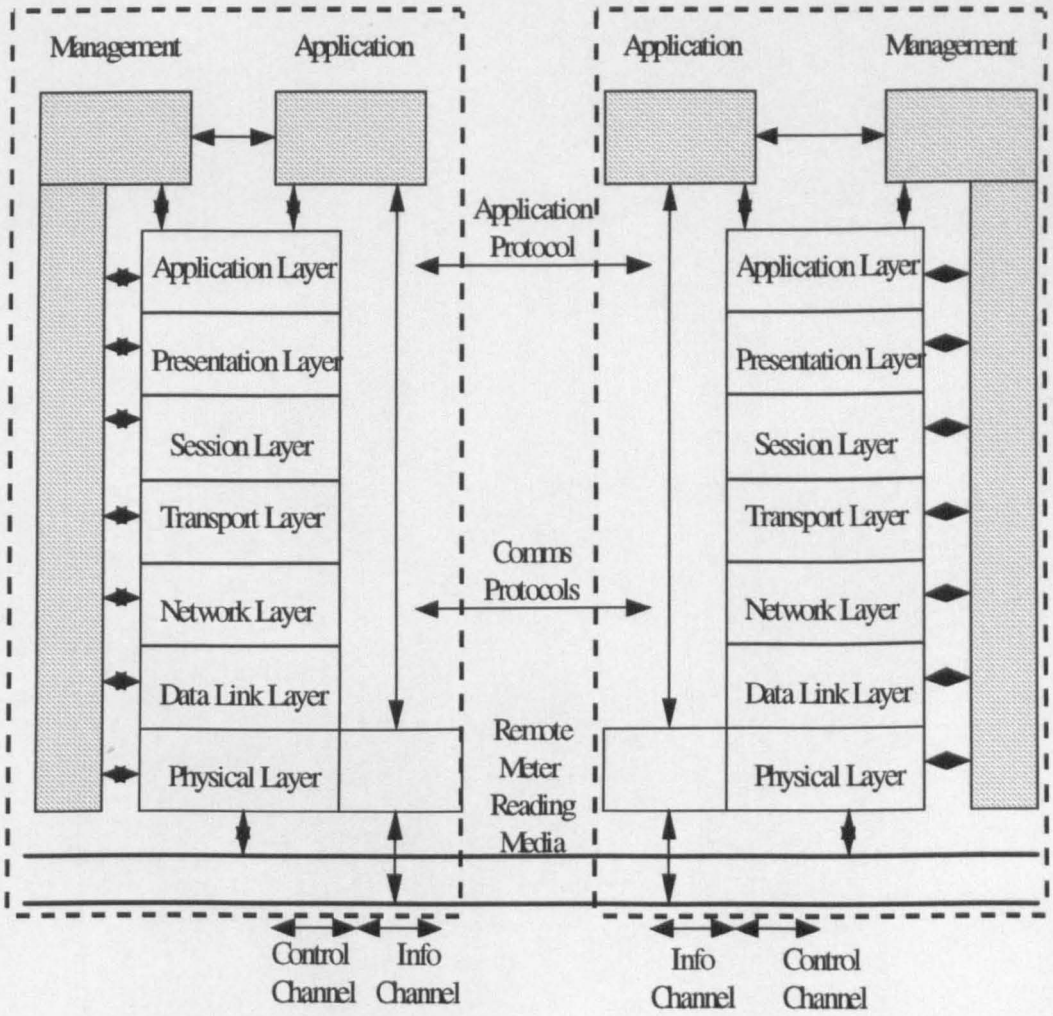

Figure 12 - European Standard, prEN 50090-2-1, Home and Building Electronic System, HBES Part 2-1: 7 Layer Model

2.2 A Practical Realisation of a Remote Meter Reading Protocol Architecture

The European Committee for Standardisation (CEN) is working on a number of aspects of protocols for Remote Meter Reading systems. In particular CENELEC SC205A WG2 is working on the definition of the protocol stack of Low Voltage Distribution Networks for automatic remote meter reading. The layered model

chosen for this purpose is the 3 layer model [127] which is derived from the OSI 7 layer model discussed in section 2.1. The three layers of the model are detailed in Figure 13.

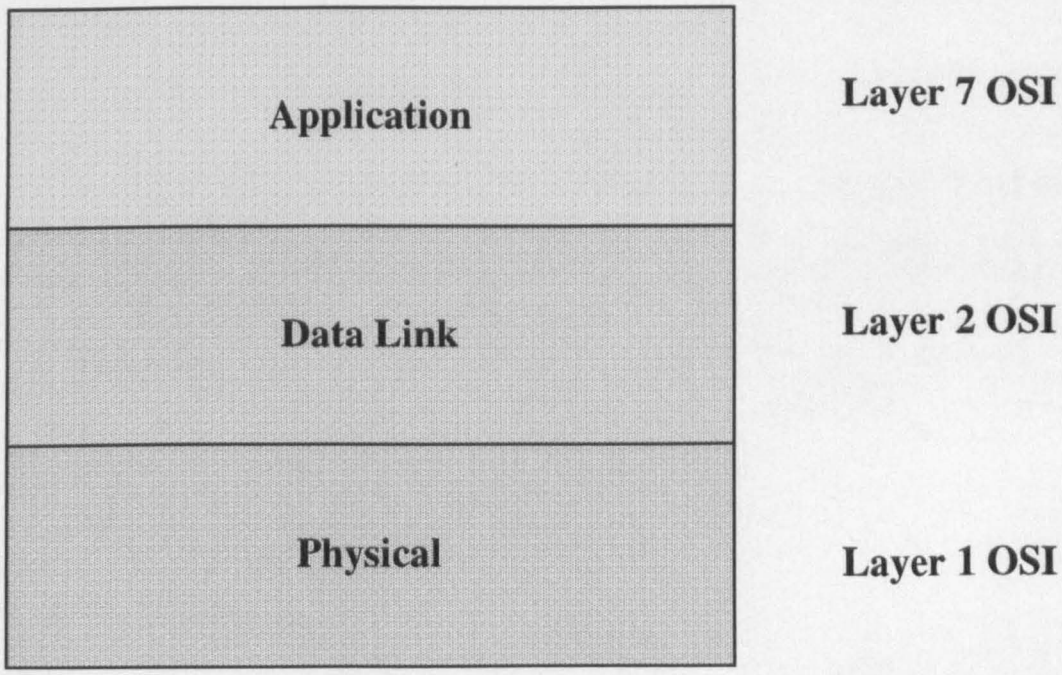

Figure 13: - 3-Layer model

WG2 has chosen an application layer in the 3 layer model that is independent of any communication media, that could be used, in order to have a unique view of all possible meter configurations. Layers 1 and 2 however are dependent on the communications media used. The protocol architecture [127] chosen by WG2 is shown in Figure 14. The application layer shown in Figure 14 is divided into two parts, the Distribution Line Message Specification (DLMS) [128], and the Logical Link Access Control (LLAC). DLMS was initially developed by Electricite de France (EDF) for Power Line Carrier and is derived from the Manufacturer

Messaging System (MMS) which is defined as an International Standard by IEC TC 57 (IEC 1334-4-41).

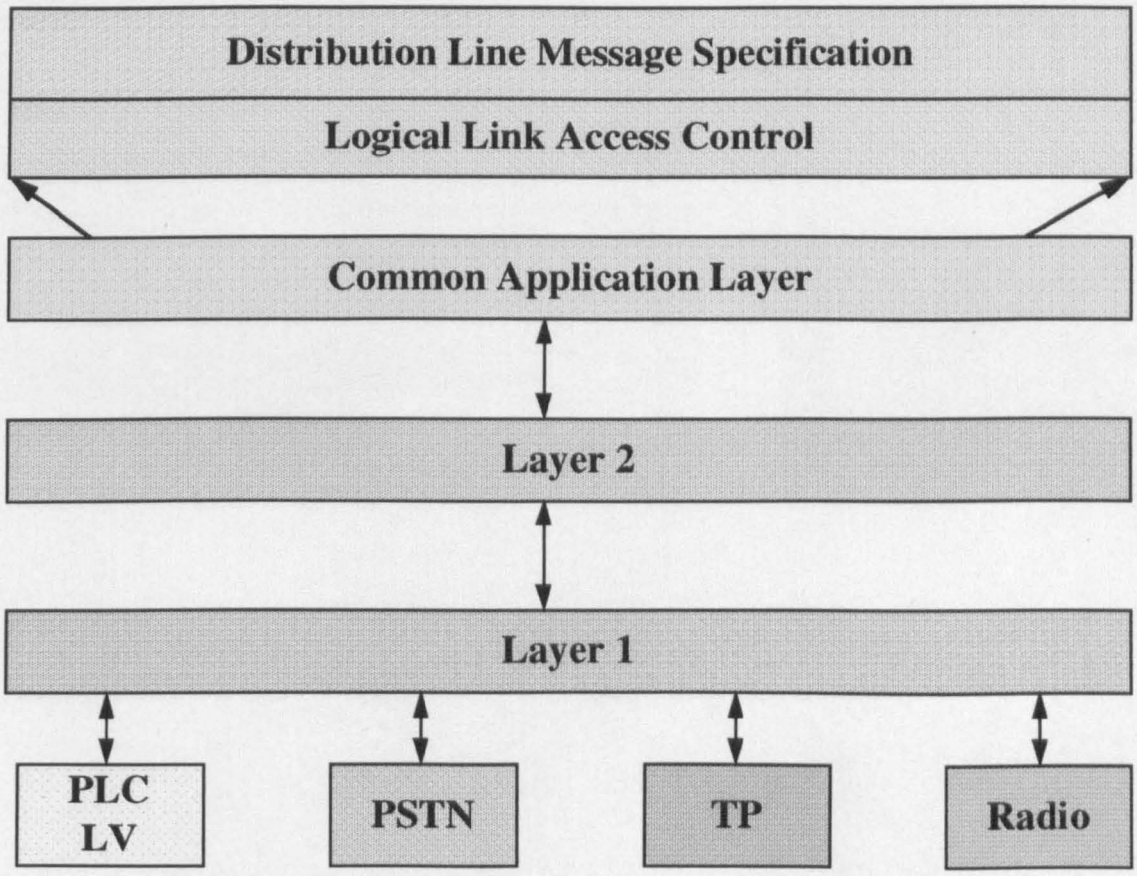

Figure 14:- IEC Protocol Architecture

In order to fully adapt DLMS to metering applications a Companion Standard (CST) has also been defined by SC205A WG2, and is detailed in document N40E Rev.4 [129, 130]. This Companion Standard should be common to all types of meters and can be seen as an additional set of rules which gives compatibility with the semantics and syntax of the DLMS kernel.

An additional document known as the Companion Specification (CSP) also allows the description of the functionalities of a meter in terms of the objects contained within it, for example, the meter ID or any communications entities. WG2 gives

specific examples of CSP in documents N42E, N47E, N48E, N51E, N52E, N53E and N57E [129, 130]. The CSP can be specific for the individual meters produced by various manufacturers and should reflect all of the potential capabilities of those meters. The CSP is not by itself an Application Layer Companion Specification but permits the meter to be presented as a transparent, independent representation in a communication network. The development of such a Companion Specification is detailed in Figure 15.

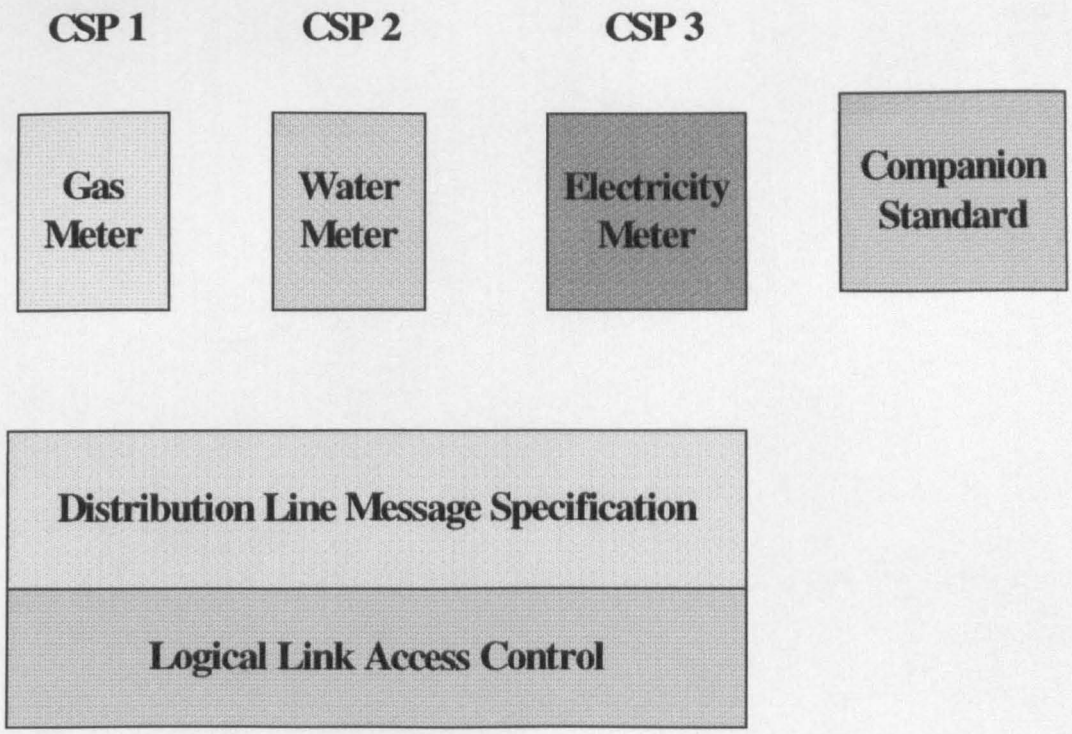

Figure 15: -: A Companion Specification

WG2 has defined common objects for a meter including ID, encryption key, address of customer, and billing. However every manufacturer still has within the terms of the standard the possibility to further develop the capabilities of his particular meter and adapt these capabilities to a particular Utilities requirements.

Definition of objects is a major part of the Companion Specification of any meter since it is these objects which ultimately define the behaviour of the meter as seen from the perspective of any communication links. A Companion Specification shall represent physical devices, like a meter or the Metering Interface Unit discussed in sections 1.4.6 and 1.4.7, as an individual or multiple Virtual Distribution Equipments (VDEs), with each VDE representing one function of the device. In the Metering Interface Unit (MIU) for example, a dedicated VDE shall be assigned for the purpose of representing the information actually pertaining to the physical device itself. This VDE shall normally be termed the Management VDE. In the simplest of Remote Meter Reading configurations an MIU may contain only a Management VDE whilst the meter or meters may contain both a Metering VDE and a Management VDE. Other more complex Remote Meter Reading systems could contain not only Management and Metering VDEs but also Supervision and special application VDEs.

The remote meter reading schemes proposed in this thesis shall be based on models, as shown in Figures 16 - 20, which are compatible with both the OSI, CENELEC SC 205A WG2 and HBES models. Where amendments to these models have been made, such amendments generally deal with the practical implementation of a Remote Meter Reading system.

2.3 Development of a Protocol Architecture Suitable for a Second Tier Supply and Wide Area Network Remote Meter Reading Systems

In conjunction with the standards and principles defined in CEN TC 294 WG2, the OSI 7 Layer Model and European Standard, prEN 50090-2-1, Home and Building Electronic System, HBES Part 2-1, 7 Layer Models a Remote Meter Reading system communications architecture could have four separate 'protocol'

and possibly utilise a number of different protocols for each interface. Figure 16 shows these possible interfaces.

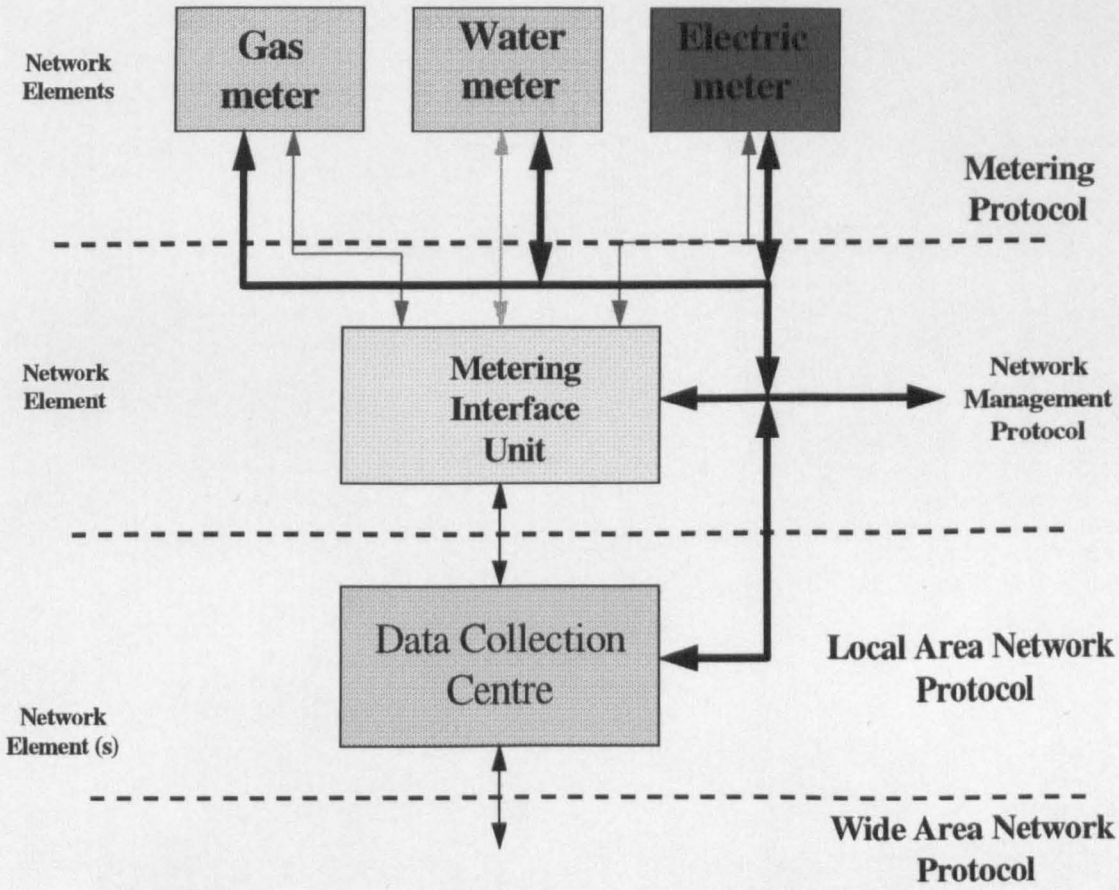

Figure 16 - Proposed Protocol Architecture for Remote Meter Reading System

The protocols shown in Figure 16 suggest an architecture where one protocol is used for metering communications, the second for local and the third for wide area communications, and the fourth for Network or Equipment management. In Figure 16 the metering protocol could be realised separately, possibly in compliance with European Standard, PrENV 50065-3 November 1994 [42], whilst the local area network could be based on standard LAN protocols as defined in the DLMS or IEEE 802.3 standards.TCP/IP could be used for the wide area network protocol whilst SNMP/IP is used for the Network Management protocol.

Figures 17, 18 and 19 shows how the proposed protocol architecture of Figure 16 and the same standards and principles, of the CENELEC TC 205A WG2, the OSI 7 Layer Model and European Standard, prEN 50090-2-1, and the Home and Building Electronic System, HBES Part 2-1, 7 Layer Models, could be used to define a Remote Meter Reading System from the Application, Layer 7, through to the Physical medium, Layer 1, in a second tier supply system where metering data needs to be transmitted over both a local and wide area network.

The proposed Network Managment protocol, as shown in Figure 16, and a method of implementation for a Management Communications Channel and Network which could be used to transmit control, and receive monitoring and performance information from a meter or communications elements will be discussed in sections 2.3.1 and 3.19.1.

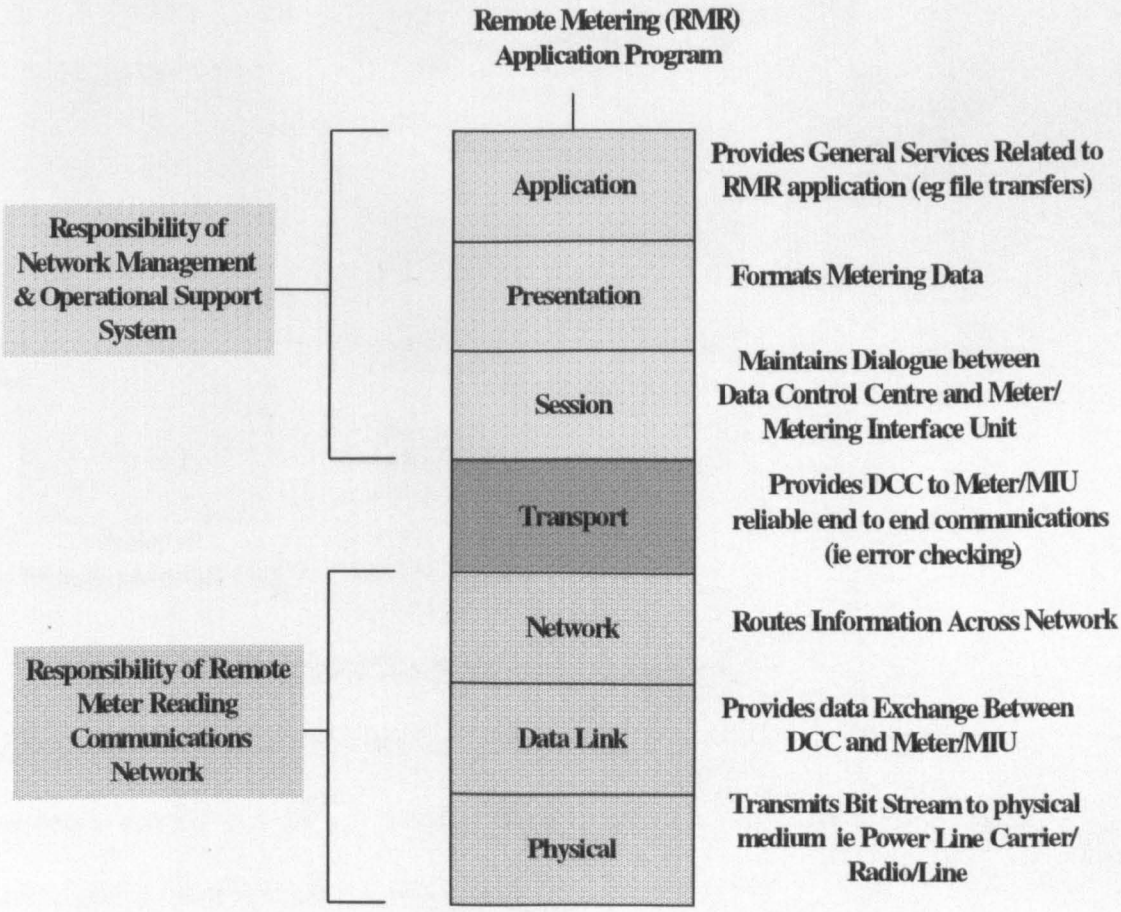

Figure 17 - Identification of Remote Meter Reading OSI layers

The model shown in Figure 17 is itself not a network architecture since it does not specify the exact services and protocols to be used in each layer of a Remote Meter Reading system. The model only proposes what each layer in a Remote Meter Reading system should do in terms of functionality. Figure 18 expands on the model shown in Figure 17 and does suggest a network architecture using a Metering Interface Unit and Data Collection Centre.

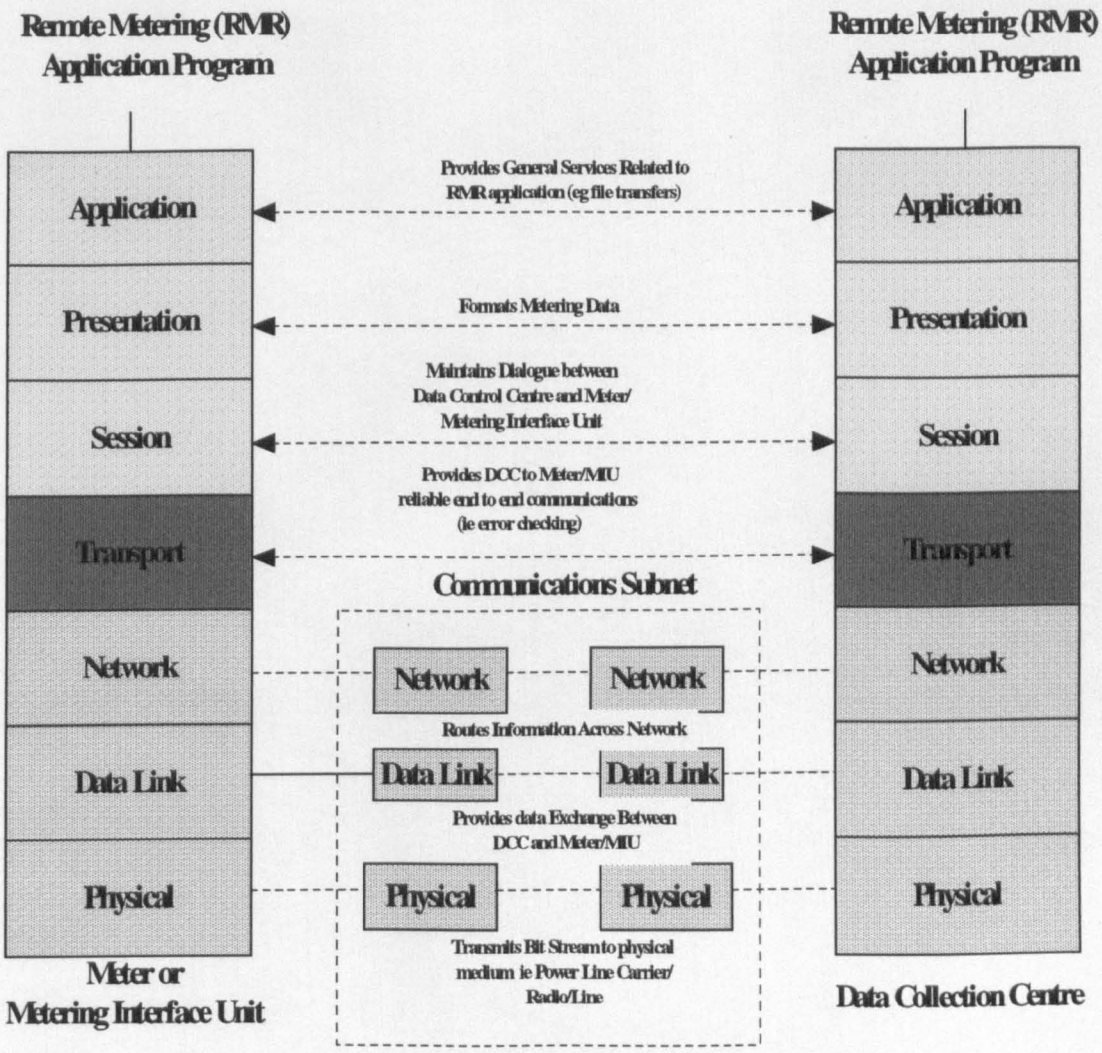

Figure 18 - Proposed Remote Meter Reading Network Architecture

Figure 19 shows how the network architecture, of Figure 18, could be expanded to cover a second tier supply system where metering data needs to be transmitted over both a local and wide area network.

The possible functions of the layers, within the models shown in Figures 17, 18 and 19, are discussed, in terms of the Application Layer through to Physical Layer, for Remote Meter Reading applications.

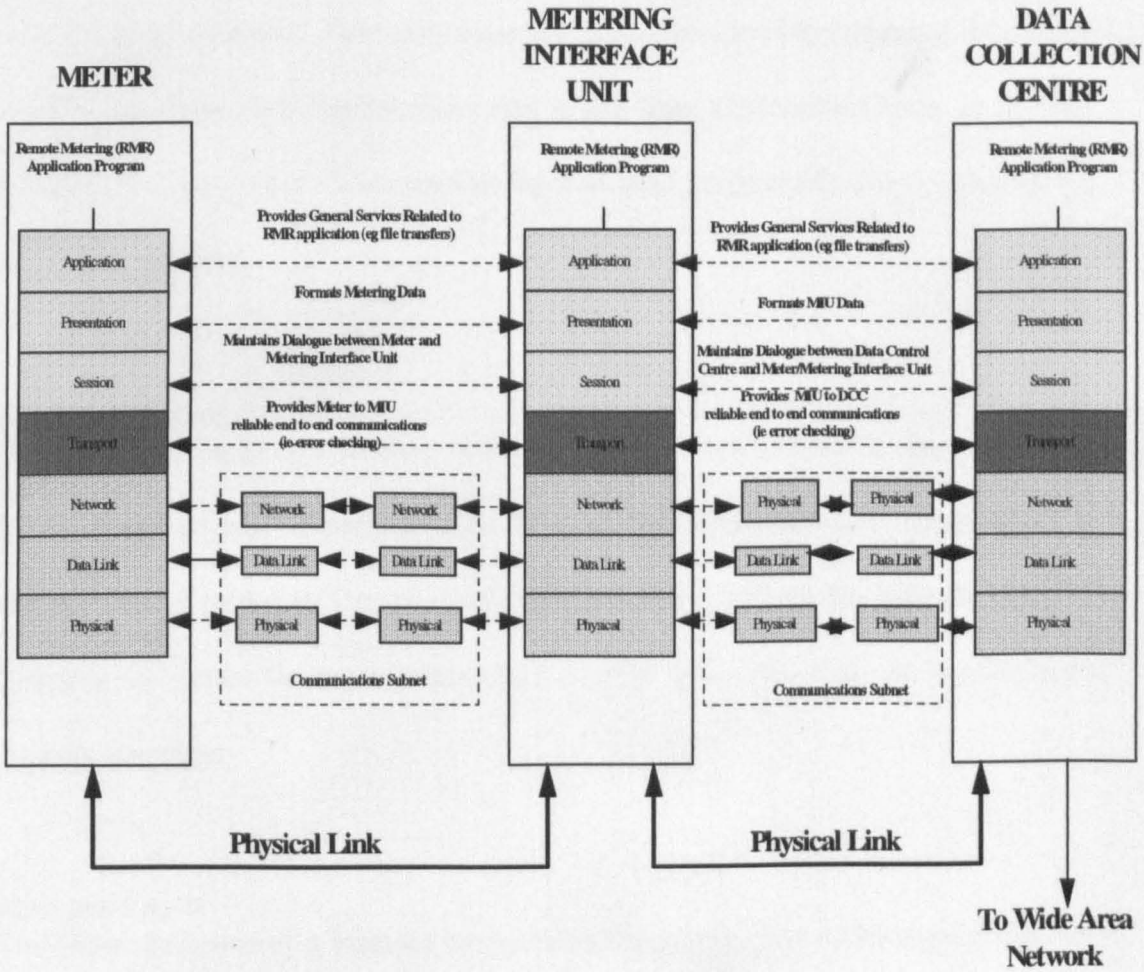

Figure 19 - Relationship Between Protocols in a Wide Area Remote Meter Reading System

Application Layer

The Application Layer in any Remote Meter Reading service should provide general services to Remote Meter Reading including such applications as the transfer of complete files containing metering data.

Presentation Layer

The Presentation Layer of a Remote Meter Reading system should be capable of converting the metering data from the Application layer into a suitable format for accessing communication resources. A typical example of this could be the encoding of metering data into a standard format.

Session Layer
The Session Layer of a Remote Meter Reading system should maintain and control the dialogue between a Meter/Metering Interface Unit and for example a Data Collection Centre. This may mean for example allowing metering data to go in both directions, full duplex, from and to the Data Collection Centre or in only one direction at a time. The session layer is also responsible for synchronising meter data transfer.

Transport Layer
The Transport Layer of a Remote Meter Reading system should be responsible for ensuring end to end communication between the Meter/Metering Interface Unit and the Data Collection Centre. One basic function shall be the packetisation of metering data from the session layer into smaller data units that can be passed to the network layer.

Network Layer
The Network Layer of a Remote Meter Reading system should be responsible for routing information across the network and control of the communications subnet shown in Figures 18 and 19. The network layer would also be responsible for ensuring congestion is controlled in the flow of metering data from a Metering Interface Unit to a Data Collection Centre.

Data Link Layer
The Data Link Layer of a Remote Meter Reading system should be responsible for providing a data exchange between the Meter/Metering Interface Unit and a Data Collection Centre. The main task is to break up the metering data into frames, transmit the frames sequentially, and process any acknowledgement frames sent

by the Data Collection Centre. The Data Link Layer in a Remote Meter Reading System shall also be responsible for flow control.

Physical Layer

The Physical Layer of a Remote Meter Reading system should transmit the metering data bit stream to the physical medium which shall include but not be limited to Power Line, Radio, and Cable including optical, coaxial, and twisted pair.

There are several key design issues that occur in Figures 8 to 19 relating to the possible Protocols that could be used in Remote Meter Reading communications and these need to be discussed in conjunction with four proposals. Two of these proposals have already been discussed in Chapter 1, sections 1.4.6 and 1.4.7 but are repeated here for completeness.

1) It was suggested in sections 1.4.6 and 1.4.7 that to reduce the potential cost impact of implementing a remote metering installation that any communications software should be installed in a Metering Interface Unit (MIU) and not the meter itself.

2) It was also proposed in Chapter 1, that the communications architecture for remote meter reading should consist of a Power Line Carrier system.

3) The third proposal is that in conjunction with 1) and 2) an ATM/SDH Broadband ISDN medium is used for a Remote Meter Reading Communications Transport Network. Detailed research to justify this choice is also explained in Chapter 6.

4) The fourth proposal is that Radio or Telephone systems are used as an alternative solution predominantly in the Customer Access network where power lines are not available or suitable for use, or in the Transport Network if needed.

These proposals are made for a number of reasons. In the development of a Remote Meter Reading system, with a potential customer base of 23 million, the actual reading and processing of pure metering data is only one small task, albeit a very important one. In order to provide a comprehensive, controllable and effective Remote Meter Reading System, in a second tier supply system, and possibly over one or a number of geographically dispersed areas, a Totally Managed Remote Meter Communications Network (TMRMCN) is required.

2.3.1 A Totally Managed Remote Meter Communications Network (TMRMCN)

A remote meter reading system could involve a very simple connection from the Computer Operating System, of one REC, to a single piece of metering equipment, where both the equipment and the connection are located within the REC's own area boundary, or, a remote metering system could involve a more complex second tier supply system as shown in Figure 8, where a communications network could be required to interconnect the Computer Operating Systems, metering and communicating equipment of a Primary Supplier, Local REC/Second Tier Agent, and perhaps the Pooling System Administrator.

In such a second tier supply system a Totally Managed Remote Meter Communications Network (TMRMCN), as suggested in section 2.3 Figure 16, is required. A TMRMCN should provide management functions, and offer communications, between the, possibly, different Computer Operating Systems

and the various metering and communications elements of the Remote Metering systems of the Primary Supplier, Local REC/Second Tier Agent, and perhaps the Pooling System Administrator.

In a remote meter reading system based on Power Line Carrier and ATM/SDH, for example, there will be many types of communication elements such as ATM Hubs, SDH Gateways, Power Line Carrier Modulation Systems, Routers, and Metering Interface Units, all of which provide functions for enabling the flow of metering information between a Customer's Premises the Local REC/Second Tier Agent, and the Primary Supplier. When managed such equipment could be generically referred to, using the terminology defined in ITU-T M.3010, as Network Elements.

To implement a Totally Managed Remote Meter Communications Network (TMRMCN) a Management Communications Channel or Network is required which should be conceptually a separate network from the communications network, used to transmit or receive metering data, although it may use parts of that communications network to send and receive information from, and control the operation of, the Network Elements. The main objective of such a Management Communications Channel or Network should be to provide a framework for the total management of a remote meter reading system. The principle behind keeping the Management Communications Channel or Network logically distinct from the communications network, used to transmit or receive metering data, provides a means of distributing management functionality in either a centralised or decentralised Remote Meter Reading management system, to the metering and associated communications equipment to be managed.

A Management Communications Channel or Network can be used to support the planning, installation, operations, administration, maintenance and provisioning of Electricity Supplies in conjunction with Remote Meter Reading and any associated communications network.

To enable this management to take place the Network Element software in a Remote Meter Reading system should also include software packages that are applied during normal operation and include such functions, as enabling communication with other internal or external network elements, of the Remote Meter Reading system and a Network Management system, to ensure a Remote Meter Reading Network Element operates as one unit with regard to functionality.

It is also proposed that a set of Remote Meter Reading Network Elements is required that permits flexible configuration thus enabling the system to be easily and readily adapted to specific communications architectures or technologies. Any Network Management System software or protocols, used in a Remote Meter Reading system must also be capable of controlling and monitoring, via the Management Communications Channel or Network, any Network Element, including meters, metering interfaces or any other communications element. The Network Management System software or protocols must also enable communication between the Network Element and a Network Management System which is characterised by the utmost flexibility with respect to application and configuration and which for example could improve or influence the processing of metering data.

In compliance with Figure 4/ITU M.3010 therefore it is also proposed that an additional protocol, relating to Network Management, should be incorporated in a

Remote Meter Reading system. This Network Management Protocol would incorporate a Message Communication Function (MCF). The MCF shall be used to convert Management Applications Functional data structures into structures that can be transmitted, via the Management Communications Channel or Network, to the Network Elements including the meters themselves.

The realisation of the MCF should have a common OSI stack where only Layers 1 (Physical Layer) and Layer 2 (data link layer) are employed, since these layers have to meet different requirements for each type of communications interface available.

A Remote Meter Reading Network Management System could use a protocol such as the Simple Network Management Protocol (SNMP)/Internet Protocol (IP) to communicate management and metering information, through the Management Communications Channel or Network, from a main Network Management Centre over a Wide Area Network as shown in Figure 20. In section 3.19.1, further research shall show how the Message Communication Function of such a Totally Managed Remote Meter Communications Network (TMRMCN), using the Low Voltage Distribution Network, could be implemented using an embedded or data control channel (DCC) to provide the Management Communications Channel or Network, which although physically integrated in the Mains Signalling Band, defined by prEN 50065-1 as 3 kHz to 148.5 kHz, is logically separate from the communications channel used to transmit and receive metering information.

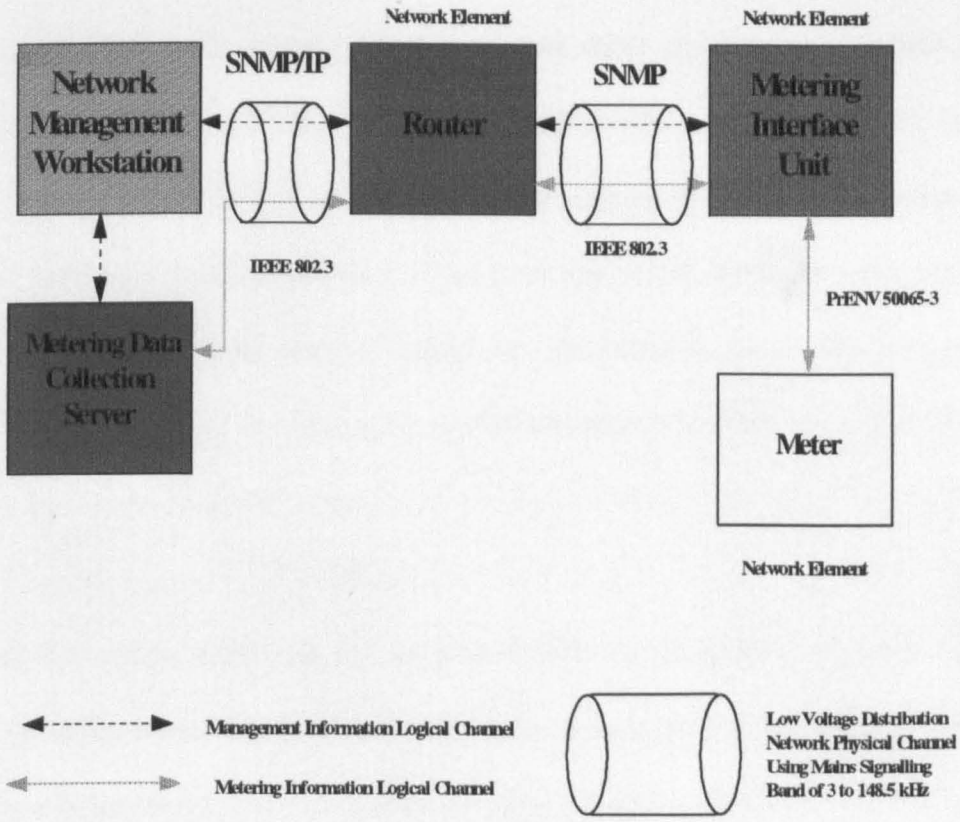

Figure 20 - Managing Network Elements in a Remote Meter Reading System

In section 1.4.6 it was proposed to not communicate with the meters directly but through a Metering Interface Unit (MIU). In the case of managing, controlling and possibly manipulating metering data it is suggested that a different protocol mechanism, possibly SNMP/IP, as shown in Figure 20, is used for managing the Metering Interface Unit and other Wide Area Network communication devices, through a Management Communications Channel or Network. There is additional reasoning behind this approach. Meters are normally designed to function in isolation, in that they only collect and store metering and associated data, and only transmit that data, in this case through a MIU, automatically on a time schedule or when requested by a Network management or control system. For communication with the Metering Interface Unit most meters could therefore have any necessary simple communications software already resident.

Metering interface units on the other hand and other communication devices, which could be used in a Remote Meter Reading communications network, may have to operate in a variety of network types and such devices should be designed with a minimum of resident software. That is to say, some of the software layers for these communication devices could be downloaded from the Network management system, via the Management Communications Channel or Network, on an 'as and when required' basis.

Designing the meter itself with the additional software capabilities to work on a number of different type of communications networks would most likely reflect in an increase in the meter's cost and to do so purely to allow it to be integrated into a particular Communications or Network Management system may not be cost effective. This in many ways strengthens the case for using a Metering Interface Unit for communications instead of communicating directly with the meter. Communications software relevant to other networks could also be downloaded to the Metering Interface Unit, via the Management Communications Channel or Network, as well as any of the other communication devices in a network.

Since a meter is designed to function normally in isolation, the resident software should not include communication protocols which are complex, network specific and can require large areas of memory. During the equipment manufacture of many communications units, a meter is termed a communications unit in this instance, employed in Local or Wide Area Communications, a unique data link layer address is assigned that can identify that unit to a network provider. In some cases these addresses are specific to different equipment vendors, and proprietary data link protocols are employed. To support network addressing and other

software downloading across any communications network, then the Meter communications stack, to provide communication, on a universal basis, and still be compliant with the OSI 7 layer model, would also need to include protocols, such as the Internet Protocol addressing scheme or the OSI Network Services Access Point, or communication across many Local and National Networks could not be achieved.

It therefore follows that in a remote meter reading system where communication to the Primary Supplier, Local REC/Second Tier Agent, and perhaps the Pooling System Administrator, could be required, it is more logical to reduce the complexity and cost of the meters themselves, and employ Metering Interface Units, where the Metering Interface Unit Communications stack memory could be sized, for example, to accommodate the User Datagram Protocol (UDP) at the transport layer.

Since UDP and IP already form the basis for supporting standard protocols, such as SNMP and CMIP, the protocol stack necessary for making Metering Interface Units, and correspondingly remote metering, conform to existing management and communication standards is already readily available and therefore negates the use of any specialised protocols, and proposes a Total Network Management solution to Remote Meter Reading. Further more since the operating and initialisation software could be stored in an erasable memory the software for the MIU can thus be replaced, via the Management Communications Channel or Network, with the latest software version containing any new metering features, without physically visiting the Customer's premises.

2.4 Other Protocol Options for Remote Meter Reading Local Communications Networks

One of the main intentions in providing a Remote Meter Reading system is to make it as economic as possible, and the probability is that in developing such a system, equipment from several different vendors shall be used, and the use of protocols, like the DLMS suggested in section 2.2, may have a significant cost impact. A second problem with using protocols for communication systems is that they can be difficult to transport across boundaries when interfacing Local Communications Networks to Wide Area Networks. Apart from the Distribution Line Message Specification (DLMS), and the Logical Link Access Control (LLAC) protocol architecture shown in Figure 14, a number of communication protocols, that could be used in Remote Meter Reading Systems have been surveyed by the Institute of Electrical and Electronic Engineers (IEEE) [134].

In conjuction with the IEEE survey it is suggested that any protocol chosen for Remote Meter Reading systems should be fully transferable, in order to work with devices, provided by several different manufacturers. In order not to incur research and development costs the protocol should utilise practical and easily implemented technology and be completely validated in terms of software and hardware. The protocol should be media independent, in that, it should not matter whether the transmission mechanism is Power Line Carrier, Radio, Copper pair or fibre optic cable. This independence will allow the service provider to use a Remote Meter Reading facility for a large number of different user access situations, in a wide range of geographic locations.

Since a Remote Meter Reading system may use Network Elements supplied by different vendors then to minimise cost the remote meter reading management system which shall actually implement and control the reading of meters is also

suggested as using standard protocols, examples of which are the OSI's Common Management Information Protocol (CMIP) or the Internet's Simple Network Management protocol (SNMP).

The IEEE survey [134] suggests a number of LAN based protocols in the IEEE 802.x series. Since a power distribution system [15,23,32,65,71], and specifically the Low Voltage Distribution Network, generally follows a Tree and Branch or Bus architecture, a Low Voltage Distribution Network can be thought of as analogous to the physical medium of many Local Area Networks (LAN). If only from the physical point of view it would seem logical to assume that the Power Line Carrier element in a remote meter reading system, could also employ a LAN protocol. LANs are generally restricted to a small area such as a building, an office or the site of a small organisation, but they can be interconnected, by such means as bridges/routers into Wide Area Networks (WANs). With a LAN system users could share access to the Low Voltage Distribution Network on an equal basis without suffering long delays.

Shared access would suit a Remote Meter Reading System, using the Low Voltage Distribution Network, since the efficiency of such systems, as will be shown in section 7.10.1, could meet the transmission needs of the Primary Supplier, Local REC/Second Tier Agent, or the Pooling System Administrator, assuming that access to the metering data is not normally required on a continuous, ie 24 hours a day, basis.

2.5 Medium Access for a Remote Meter Reading Based LAN System

Most LANs work by allowing all users to complete fairly for access to the common network. This can be done by contention, by offering access to the

network in turn to each station, or by pre-allocating bandwidth to some users. Contention can be very efficient if the network is lightly loaded, as stations will quickly gain access to the network. However when working near the capacity of the network, the inherent possibility of collisions, and therefore of retransmissions increases, and the time to access the network could increase considerably on the Low Voltage Distribution Network where there could be many potential users. This area of research is discussed in more detail, in section 7.10.1, with reference to the 'system throughput' of a Power Line Carrier Communication and Broadband ATM/SDH Transport Network used in Remote Meter Reading.

2.6 A Carrier Sense Multiple Access/ Collision Detection Contention Scheme for Remote Meter Reading LANs

The simplest contention scheme for a remote meter reading system over Power Lines would be for the Meter or a suitable "Metering Interface Unit" to transmit a data frame whenever it has metering data ready to send. Since it has been proposed for reasons explained in section 1.4.6 to use a Metering Interface Unit rather than directly communicating with each Utility Company's individual meters then the Metering Interface Unit or MIU shall be referred to for communications purposes and not the meter itself. Early packet radio systems were based on this principle, called the Aloha system, where a single radio channel was used for many "slave" stations to a central site which was the master controlling station. When collisions occurred on this system outstations waited a random time period and then retransmitted.

The Aloha system was originally based on variable sized frames but since the type of metering information available will be very well defined it is possible to double the efficiency by dividing the time available into slots and insisting each frame is transmitted within a "slot". Such a scheme is known as slotted Aloha. It would be

possible to improve on the above system if the Metering Interface Unit, instead of arbitrarily sending data when ready, first checked to ensure that no other unit was already sending data. This technique is known as Carrier Sense. A number of protocols which use Carrier Sense techniques exist.

The **1-persistent** protocol listens to a channel to ascertain if it is busy or not. If the channel is busy the Metering Interface Unit continuously senses the channel until it is 'free' again, ie as soon as another Metering Interface Unit has completed its transmission, then sends a frame. If a collision of data occurs on the channel, the Metering Interface Unit waits a random amount of time then transmits the frame again. The protocol is so called because the Metering Interface Unit transmits with a probability of 1 whenever it finds the channel free.

A second CSMA protocol is known as **non-persistent.** Before transmitting a data frame the Metering Interface Unit listens to a channel to ascertain if it is busy or not. If no other Metering Interface Unit is transmitting data the 'listening' Metering Interface Unit sends the data frame.

Unlike the **1-persistent** protocol the **non-persistent** protocol does not continuously sense the channel for the purpose of transmitting its data, as soon as another Metering Interface Unit has completed its transmission, but waits a random period of time before returning to the channel.

A third CSMA protocol is known as **p-persistent**. This system is normally used with slotted Aloha type systems. When a Metering Interface Unit becomes ready to send a data frame it senses the channel. If the channel is 'free' it transmits its data with a probability p . If the channel is busy it waits until the next 'slot' is free

and transmits its data with probability $q = 1 - p$. If this subsequent slot is busied out the Metering Interface Unit repeats the process until it succesfully transmits the data frame or waits again with probability p and q

In a Carrier Sense system once the frame has been sent the Metering Interface Unit checks the channel directly for collisions. This technique is known as Collision Detection. Once a collision is detected the Metering Interface Unit could abort the transmission at the earliest opportunity, a brief "jam" signal is sent to clear to the network, and after a random interval the Metering Interface Unit retransmits the data.

2.7 Suitable Protocols for a Remote Meter Reading System Based on a Local Area Network Power Line Carrier Customer Access Network

There are many protocols which could be adapted to a Low Voltage Distribution Network LAN. The suitability of the IEEE 802.3 standard using a Carrier Sense Multiple Access/ Collision Detection (CSMA/CD) **1-persistent** protocol, which is already deployed on many LANs, is examined in the following example, however, other similar LAN type protocols could be used, depending on the individual transmission requirements of the Primary Supplier, Local REC/Second Tier Agent, or the Pooling System Administrator. The IEEE 802.3 standard adapted for Power Line Carrier is suggested not only because the majority of LANs installed in the computer world are based on this standard which can support speeds ranging from 1 Mbit/s to 20 Mbit/s but because equipment to interface such systems to other communications technologies, including radio and optical fibre, is also readily available. In a Remote Meter Reading system with a second tier supply system this is an important feature in the possible development of a Wide Area Network infrastructure.

2.8 Addressing the Metering Interface Unit and Individual Meters

The IEEE 802.3 standard [43 and 44] uses a 48-bit address format which is shown in Figure 21. It is proposed to implement this format in a version that could be used in a remote metering system.

I/G	U/L	46 - Bit Address

I/G = 0 = Individual Address

I/G = 1 = Group Address

U/L = 0 = Globally Administered Address

U/L = 1 = Locally Administered Address

Figure 21 - Conventional 48-bit IEEE 802.3 Address

The proposed implementation is shown in Figure 22 where the first bit of the addressing format denotes either the address of an individual Metering Interface Unit or a group address. Group addresses in this instance could indicate that the frame transmitted from a Local Collection Centre and which contains metering data is destined for all the Meters of businesses consuming more than 100 Kilowatt, but not for residential customers, for example for the purpose of changing tariffing rates.

I/G	U/L	43 - bit MIU Address	3 - bit Individual Meter Address

Gas Meter = Address 001
Water Meter = Address 002
Electric Meter = Address 110
Broadcast = Address 111

Figure 22 - Proposed Version of IEEE 802.3 Addressing for Use in Power Line Carrier Data Communication

A special case of the Group address could be where all the destination bits are set to 1 indicating that the frame is to be sent to all Metering Interface Units on the network, domestic and residential.

The remote metering IEEE 802.3 address could include three specifically designated bits in order that the three individual meters of the largest Utilities, Gas, Water and Electricity, can be addressed if need be. Even with the reduction this would cause to the addressing bits, 48 to 43 2E10 [43] individual Metering Interface Units, a total of 8,796,093,022,208, could be addressed. The information fields of the proposed IEEE 802.3 frame would contain metering data, source and destination addresses but be restricted to 48 bytes. The purpose behind this is that once the data has reached the Local Data Collection Centre it would have all supplementary information bits 'removed' and be reconstituted to contain only metering data, and source and destination addresses which could then be retransmitted as a 48 byte ATM frame over a PTO or private Synchronous Digital Hierarchy Transport Network which is perceived as the Wide Area or National Network. This topic shall be discussed in more detail, in Chapter 6 and section 7.10

One of the advantages of using LAN protocols on a Low Voltage Distribution Network and specifically those protocols compliant with IEEE 802.x is that they are all based on a shared media packet broadcast type network, but instead of computer or workstations sharing the medium, as is normal, Metering Interface Units are suggested instead. By providing a remote meter reading Low Voltage Distribution Network LAN using the IEEE 802.3 standard, Logical Link Control, as defined in the second layer of the OSI 7 layer model, shall be based on a set of

link control services common to many communication network node technologies which in conjunction with the simple connection service offered by the same standard means metering data could be routed in frames, on a point to point, multicast or broadcast basis.

2.9 Advantages of SNMP/CMIP and IEEE 802.3 Approach for a Remote Meter Reading System

Many protocols and communication standards could be used for remote meter reading on a Low Voltage Distribution Network. The main reasons that a combined SNMP/CMIP and IEEE 802.3 approach is suggested are:

- CSMA/CD technology and equipment is readily available.

- With the typical loads on a Low Voltage Distribution Network, this is discussed in more detail in section 7.2, meters/metering interface units shall get fast access to the network.

- SNMP/CMIP is a recognised standard and is implemented by the majority of equipment manufacturers

- Both IEEE 802.3 and SNMP/CMIP are compatible with OSI 7 Layer model thus being universally acceptable.

By implementing a standard management and communication protocol agent at a Metering Interface Unit, then where the metering interface unit is employed with other communication network elements, such as bridges, routers, radio multiplexers, SDH gateways, ATM Hubs to form a remote meter reading

communications network then these units would normally already have the necessary facilities to implement SNMP/CMIP protocols. The advantage to a REC of using the Open Standard SNMP protocol is that metering information, for example consumption, and the data required to manage any system elements, including communication network elements, can be readily integrated onto existing network management computer platforms, including that of most main National Public or Private Network Operators, thus cutting costs.

2.10 Metering Data Formats and Structures

In evaluating suitable protocols, software architectures or data rates an automated meter reading system, local or remote, must take into account not only the requirements to provide "purely physical" metering data, but also how to provide other facilities and information, associated with that data, which can prove useful to the Primary Supplier, Local REC/Second Tier Agent, or the Pooling System Administrator and the customer. A customer's perspective can be useful in ascertaining possible "supplementary data" requirements for remote meter reading systems. These supplementary data requirements could also be described as the local administration requirements of a Remote Meter Reading system, since they would normally involve such items as billing format, type and amount of display information, and security. For both requirements (Customer and Utility) it should be possible to determine a " system requirement to data ratio" and therefore the most efficient communications medium, in terms of message format, bandwidth, and reliability, for carrying that data.

For example, if the requirements of the Primary Supplier, Local REC/Second Tier Agent, the Pooling System Administrator and Customer are relatively simple, for example the basic measurement and display of energy consumption only, then a remote meter reading system could measure the quantity of electricity, gas or

water consumed, and then use this information for manual billing purposes. In this instance the "system requirement to data ratio" would be relatively small. Subsequently the metering data to be transported across a communications network, could use relatively simple modulation techniques, small bandwidths, and any one of a number of communications methods, for example power line carrier, telephone line or radio.

The small amount of transmitted data, typically 10 to 50 bits/s, required for such a remote meter reading facility, could be provided using a simple multiplexer equipment as the Metering Interface Unit, to combine the three services metering inputs, with connection established to the data collection centre via a dial up modem such as described in Figure 23.

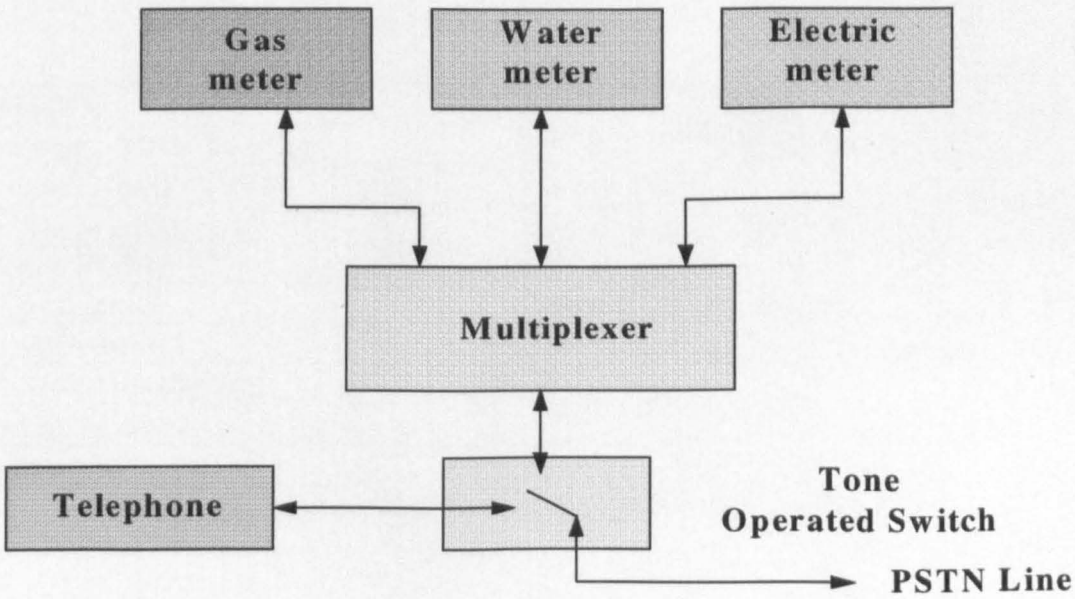

Figure 23 - Dial Up Modem Remote Meter Reading Service

The telephone line could be alternated from the telephone instrument to the remote meter reading system for example by a "tone controlled" switch. However where a REC wants to provide a more flexible remote meter reading system and additional facilities, such as the resetting of tariffs remotely from the data collection centre and security monitoring (against fraud through meter tampering), then the amount of customer data will increase in conjunction with these extra facilities and the type of system detailed in Figure 23 would be inappropriate. Table 3 suggests some of the possible requirements, of both Customer and the Primary Supplier or Local REC/Second Tier Agent, which could be required in a modern remote meter reading system. The Customer Access Network in this case will be required to handle greater volumes of data transmitted to and from each individual customer to a Local Data Collection Centre, which given the likely nature of this data, suitable error correction and protection mechanisms may also be needed.

UTILITY	USER
Automatic Meter Reading	Consumption in Relevant Currency
Dynamic Tariff Control	Current Unit Cost
Service Management	Next Bill Projection
Service Profile	Competitive Purchase
Credit Control	Uniform Price Increases
Fraud Detection	User Friendly
Network Management	
Remote Disconnection	
Connection	

Table 3 - Requirements for a Remote Meter Reading System

The resultant metering data would then be transported from a number of such Local Data Collection Centres to a Main Data Collection Centre. In conjunction with this somewhat simplified approach, Mak & Radford [14] present a more detailed analysis of three generic communications infrastructures and develop

expressions for the system response times and message throughput of those infrastructures in the context of a Remote Meter Reading system. For example, it is suggested [14] that assuming a typical residential electricity meter has six or less dials, and a minimum resolution of tenths of kilowatts, a monthly total consumption meter reading could be transmitted in three bytes of data. Table 4, shown below, takes this suggestion a stage further and proposes the breakdown of metering data into a number of simple bit allocations where each 'bit grouping' represents specific information, relative not only to energy consumption, but other features that could be relevant to a remote meter reading system.

No of Bits	Utility Use	User	Comment
40	Automatic Meter Reading		Automatic Meter Reading - Based on binary scheme. 40 bits is estimated sufficient to carry information on capacity of supply up to a maximum of 1000 Megawatts.
4	Dynamic Tariff Control		Dynamic Tariff Control - Based on sixteen levels of tariffs
3	Credit Control		
1	Fraud Detection		Based on simple Flag system.
1	Remote Disconnection/ Reconnection		Set On / Set Off
	Service Management		Number of bits required for this depends on level of service to be provided
	Service Profile Recording		Number of bits required for this depends on amount of profile data to be stored/recorded
	Network Management		Number of bits required for this depends on level/depth of network management facilities to be provided
24		Consumption in relevant currency	
24		Current Unit Cost	

Table 4 - Data Requirements in Bits for a Remote Meter Reading System

The 'bit groupings', shown in Table 4, could represent the following information.

Automatic Meter Reading

40 digits or bits are allocated to carrying meter data. Even using a simple binary scheme this would allow the transmission of information on energy usage up to a total capacity of 1000 Megawatt, or 2^{40}

Dynamic Tariff Control.

It is suggested 4 bits are allocated to this and the number of tariff levels would then be $2^4 = 16$, or Tariff 0001 = 1 pence per unit in summer, Tariff 0010 = 50 pence per unit in winter.

Credit Control

These three bits of data could be allocated on the basis of eight levels of credit, possibly related to automatic payment of bills by credit card, bank debit, or, 111, Excellent Credit, Pays by direct Debit, 000, Poor Credit, Two Bills Outstanding.

Fraud Detection

In the event of tampering with either the metering device, or the associated communications network this Flag should be raised. As explained in Chapter three this action may also cause an amendment to the Frequency Hopping sequence in a Frequency Hopping Power Line Carrier system.

Remote Connection/Disconnection

This bit could be set by the Network Management system operator, manually, in the event of a need for disconnection of the service to a particular client, for example for non payment of bills.

Service Management, Service Profile Recording, Network Management

The number of bits allocated to these features could vary dependant on the scope required, for example service profile might include data on how long the client had been with a utility, what his payment record was like.

Consumption in Relevant Currency

It is suggested 24 bits are allocated for this purpose. The data calculated here should be related to the Automatic Meter Reading discussed earlier. Four bits would be allocated to each monetary digit, ie 0000.00. The Consumption in relevant currency would be a direct multiplication of the Current Unit Cost x Automatic Meter reading.

Current Unit Cost

This should be presettable by the REC.

2.11 Encoding, Transmitting and Decoding Metering Data Formats and Structures

Not only is the format and structure of metering data relevant but the entire problem of encoding, packetisation, transmitting and decoding (transfer syntax) of those data structures for transportation across networks whilst providing equipment-independent communication is also important. The Message Transfer system of the application layer of a protocol stack is concerned with encoding, packetisation, transmitting and decoding (transfer syntax) those data structures for transportation across networks including relaying the values of different types of data structure, where the types may never be pre-defined, from the originator to the recipient. To ensure that communication can take place across a network, independent of the equipment supplied, both an abstract syntax and a transfer syntax are required. An abstract syntax is a method which allows the logical and unambiguous description of messages using a set of predefined rules or types. A transfer syntax is a set of encoding rules which determines the series of bits to be transported based on the abstraction representation of the message and its true application value.

When a message comes into the Message Transfer system the syntax is checked for validity, and if found invalid, is sent back with an explanation. If it is a valid message then normally a message identifier and time stamp are affixed. Possible message types can include text such as American Standard Code for Information Interchange (ASCII) and if the recipient cannot directly accept the message type an attempt must be made to convert it to the requisite type before delivery.

The European Committee for Standardisation (CEN) produced a document, CEN/TC/294/WG2 N.59E, November 1995 [131], which compares the relative performances of different encoding rules used by application layers based on the Distribution Line Message Specification (DLMS) shown in Figure 14. Both the Distribution Line Message Specification (DLMS) protocol definition, and the IEEE 802.3 using Carrier Sense Multiple Access/ Collision Detection (CSMA/CD) protocol, described in section 2.7, use the only presently available International Standardised abstract syntax, ASN.1 (Abstract Syntax Number 1). ASN.1 is described in International Standard 8824 whilst the rules for encoding data structures are given in International Standard 8825.

Remote meter reading applications shall involve the exchange of a data structures between many possible infrastructures including meters, Metering Interface Units, Local data Collection Centres, and possibly National Data Collection Centres. The structure used to transfer metering data may contain Automatic Meter Reading, Dynamic Tariff Control, Credit Control, Fraud Detection, Remote Connection and Disconnection, Service Management, Service Profile Recording, Network Management, Consumption in Relevant Currency, and Current Unit Cost Data, as shown in section 2.10, in addition to other information such as addressing. These data structures are generally shown as being represented by frames, or packets as

shown in Figures 21 and 22. In a Remote Meter Reading system for example a *Call Request* Packet could be regarded as a data structure with fields for the packet type, Metering Interface Unit and Data Collection Centre addresses, and other meter parameters. Such data structures can be transmitted as Application Protocol Data Units (APDUs).

The fields of these APDUs could be complex and be of a more complicated type, for example boolean or integer, than the simple binary scheme suggested in section 2.7, and a more formal method is required to describe their data structures. The idea of using Abstract Syntax Number 1 is to define all possible metering data structure types and package them together in a module. As Figure 24 shows when a Remote Meter Reading application wants to transmsit a metering data structure (ie an APDU), it can pass the metering data structure to the presentation layer, along with the ASN.1 name of the data structure. Using the ASN.1 definition as a guide the presentation layer then knows what the types and sizes of the fields in the data structure are and therefore knows how the decoding should be carried out. At the receiving end, the Metering Interface Unit, the presentation layer looks at the ASN.1 identity of the metering data structure (encoded in the first byte) and knows how many bytes belong to the first field, the other fields and their types. With this information the presentation layer of the Metering Interface Unit protocol stack can convert any external format used on the external connection to its own internal format. For example if the agreed upon format for transferring metering information is two's complement and the Metering Interface Unit uses one's complement, the presentation layer of the MIU protocol stack can convert all the metering information to one's complement before passing the APDU to the user.

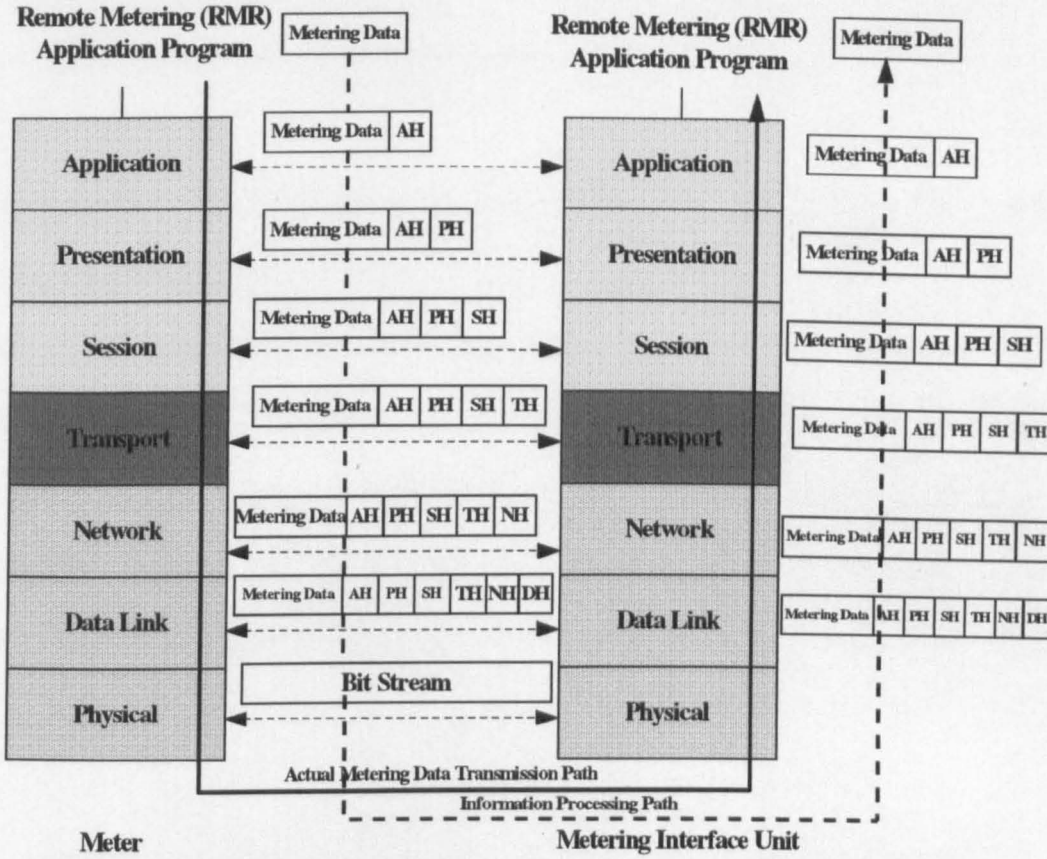

Figure 24- Data Transmission in A Remote Meter Reading System

Figure 24 shows an example of how metering data could be transmitted using the models shown in Figures 17, 18 and 19. The meter in Figure 24 has some data to send to the Metering Interface Unit. It 'passes' this metering data to the application layer which then attaches an application header (AH) to the front of the 'raw' data and passes the resultant frame to the presentation layer. The presentation layer could transform the applied data into a requisite data structure suitable for communication between the Meter and Metering Interface Unit, and add a header (PH) to the front before passing the result to the session layer. It is important to note that although in Figure 24 the data from the application layer to the presentation layer is shown as two separate data entities in fact the presentation layer is not aware of which portion of the data passed to it is true

metering data. The process is continued until the physical layer where the resultant is actually transmitted to the Metering Interface Unit.

The principle behind the model shown in Figure 24 is that although the actual transmission of metering data is a vertical process, each layer is programmed in effect as if it were horizontal. When the sending session layer gets a message from the presentation layer it attaches a session header to it and sends it to the receiving session layer for example. The transmission between the meter and Metering Interface Unit shown in Figure 24 could equally have been applied to transmision between the MIU and Data Control Centre or between the DCC and a Wide Area Network.

As opposed to the abstract syntax the choice of transfer syntax must be made at the application profile level. Where a Utility wishes to use the Distribution Line Message Specification (DLMS) CEN/TC/294/WG2 N.59E assists in the choice of transfer syntax by providing theoretical comparisons of different encodings, based on a representative sample of ASN.1 structures. The general principle behind these encodings is that each value transmitted consists of four fields:

a. An identifier

b. The length of the data field , in bytes.

c. The data field.

d. The end of contents flag, if the data length is unknown.

The first three bytes are always present. The last field is optional.

The identifier field identifies the item that follows. The identifier field has itself three subfields, the Tag (2 bits), Primitive/Constructed field (1 bit), and the

Number field. The TAG field can consist of the following bit groups which are each used to identify a specific type of data.

00 UNIVERSAL

01 APPLICATION

10 Context-Specific

11 PRIVATE

The Primitive/Constructed field is set to 0 for primitive type and 1 if the syntax is constructed.

The Number field contains five (5) bits which are used to encode the value of the Tag if it is in the range 0 to 30. If the tag is greater than 30, ie 31, the number field contains the value 11111, with the true value of the Tag in the next byte(s).

Following the Number field of the Identifier comes a field telling how many bytes the data occupies. For data lengths of less than 128 bytes encoding takes place of these data lengths directly into this byte. For longer data lengths multiple bytes are used.

In some instances data may be passed from the Application Layer to the Presentation Layer in smaller units, particularly where the presentation layer has only limited buffer space. To indicate this special situation the length of the data field is set to all ones to indicate the data field is of variable length. In this instance the data field would then be terminated by an end-of-contents flag. The encoding of metering data depends on how that data is represented. Integers are normally encoded as twos complement, Booleans are encoded with FALSE as 0

and TRUE as any other value, Bit strings are directly encoded on a one for one basis, Octet strings are transmsitted with the most significant digit first.

It has been shown in this chapter that there are a number of protocol options, such as DLMS and the IEEE 802.3 standard, available to any Utility who wishes to implement a Power Line Carrier based Remote Metering system on the Low Voltage Distribution Network. In conjunction with the choice of protocol, and the subsequent transmission and reception of metering data, further research in Chapter 3 suggests the modulation schemes that could be used to transport this data on a Low Voltage Distribution Network using Power Line Carrier.

Chapter 3 - Modulation Systems for Low Voltage Communications

3.1 Introduction

A Power Line is designed to carry mains power distribution and its characteristics are optimised to allow it to do so. The same characteristics that are useful for mains power distribution do not make Power Lines ideal for communications signalling. Previous research [11,12,15,16,17, 25 and 26] into the suitability of power lines as a possible communications medium, for Remote Meter Reading, had indicated that the loaded line impedance, voltage and noise values [11,12,15,16,17, and 25], present at the higher levels of the National Grid Transmission network, 275kV and 133 kV, could make this network unsuitable for transmitting and receiving metering data.

The Low Voltage distribution network of the RECs, 33kV, 11kV, 415V and 230V, although not suffering the same levels of impedance, voltage and noise [2,5,10, and 11], as the National Grid transmission network, is still a hostile medium in comparison to a telephone line for example. The Low Voltage Distribution Network could offer a more suitable medium for transmitting and receiving data [2,5,10,11, and 21], in a Remote Meter Reading system, but the choice of modulation system used, in conjunction with the transportation of such data, is of prime importance.

In choosing a modulation system for communicating Remote Metering data, on the Low Voltage Distribution network, the possible effects of such a signalling system on the network, and the network on the signalling system, cannot be evaluated in an isolated manner. The operation of such a Low Voltage Signalling

System (LVSS) must also be considered in a 'shared' environment since it is likely that Remote Metering may not be the only 'user' of Power Line for communications purposes. The effects of a particular Low Voltage Signalling System used for Remote Meter Reading, on other communications systems, also needs to be analysed.

There have been previous investigations into the use of Low Voltage Modulation systems [2, 5,10,11,15,16,25 and 42]. In many instances these investigations have concentrated on a particular modulation scheme relevant to the communication system under investigation and predominantly concern Frequency Shift Keying and Amplitude Shift Keying, although Spread Spectrum techniques have also been covered. It is proposed that what is needed is a universal model for evaluating modulation systems for use in Low Voltage Signalling. Such a model needs to incorporate both the individual characteristics of a Remote Meter Reading modulation system, the characteristics of any other Low Voltage Distribution Network signalling system, and a combination of these two characteristics in a shared environment, the desired Remote Meter Reading signal and other possible interfering Low Voltage Distribution Network signals, including all their relevant mechanisms, such as receiver selectivity, power line propagation and attenuation characteristics. The ideal Low Voltage Distribution Network analytical signalling model is one in which all of the possible characteristics of the modulation systems, and a Power Line, are combined in order that the effects between the transmitter and receiver can be ascertained.

3.2 Signalling Characteristics Of Power Line

The signalling characteristics of a Power Line in use in the United Kingdom and Europe can be summarised as follows:

3.2.1 Bandwidth

A practical bandwidth of 3 kHz to 148.5 kHz is defined by EN 50065-1 for Low Voltage Signalling applications. (In the USA the band 40 kHz to 450 kHz has been allocated for this purpose).

3.2.2 Voltage Levels

It has been shown, by British Telecom [109], that 95% of the 10 minute mean RMS value of the voltage characteristic of electricity supplied by public Low Voltage Distribution Networks in the United Kingdom can suffer both transient, and large harmonic overvoltages, for short periods but that under normal operating conditions can be related to a nominal voltage, Un.

(i) Un ± 10%. Where Un = nominal voltage.

It is expected that the nominal voltage, Un, for public Low Voltage Distribution Networks in the United Kingdom should have the following standard values. These standard values are expected to be mandatory by the year 2003.

(i) Un = 230 V between phases for three wire three phase systems

(ii) Un = 230 V between phase and neutral

(iii) Un = 400 V between phases for four wire three phase systems.

Until the year 2003 the nominal voltages can differ from the standard values.

3.2.3 Power Frequency

Under normal operating conditions the average value of the fundamental frequency of the same supply voltage in the United Kingdom in a corresponding study by British Telecom [109] should be 50 Hz, when interconnected to a loaded Low Voltage Distribution Network, and should be within the range:

(i) 50 Hz ± 1% during 99% of year

(ii) 50 Hz ± 6% during 1% of year

when measured over a period of ten (10) seconds.

For the same fundamental frequency, where the distribution system was interconnected to an unloaded Low Voltage Distribution Network the values were found to be:

(i) 50 Hz ± 2% during 95% of year

(ii) 50 Hz ± 15% during 5% of year

3.2.4 Harmonics of the Supply Voltage

Harmonics of the supply voltage [109], during each period of the week, for 95% of the 10 minute RMS voltages value shall not exceed the values given in Table 5:

ODD Harmonics					EVEN Harmonics	
Not Multiples of 3		Multiples of 3				
Order	Rel. Volts %	Order	Rel. Volts %		Order	Rel.Voltage %
5	6	3	5		2	2
7	5	9	1.5		4	1
11	3.5	>9	0.5		>4	0.5
13	3	Measurements were not taken at the following values because there effect at the harmonic frequency concerned was judged not to effect the fundamental frequency				
17	2					
19	1.5					
23	1.5					

Table 5 - Values of Individual Harmonic Voltages at Low Voltage Supply Terminals

The values given are a percentage of the nominal voltage Un. It is possible that certain resonances may cause higher voltages for an individual harmonic but in any case the total harmonic distortion of the supply voltage should not exceed 8%.

3.3 Attenuation on the Low Voltage Distribution Network

The attenuation on a Low Voltage Distribution Network [10,16,17,25,26,67,68], as shown in figures 25 and 26, can vary dependant on, the type of building, frequency of operation, and the time of day, when the measurements where taken, from a few dB/km, on unloaded cable, to tens of dB/km in conjunction with rising user demands on the network. The attenuation also tends to increase at the higher frequency ranges, above 125 kHz.

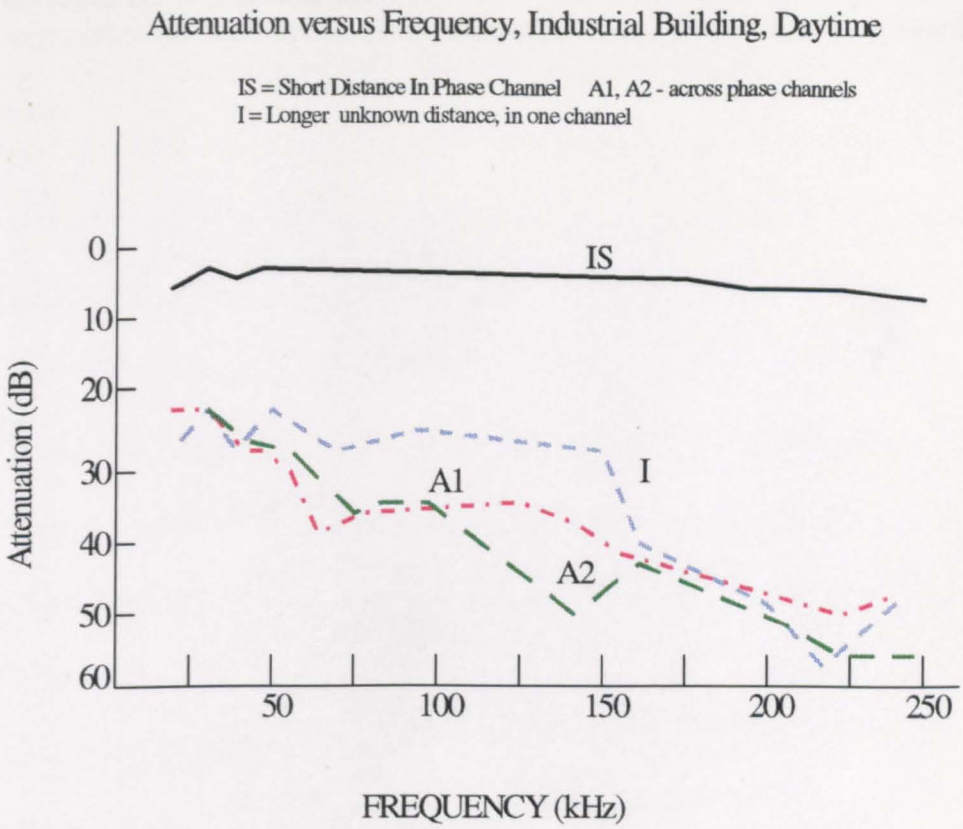

Figure 25 - Attenuation versus Frequency, Industrial Building, Daytime

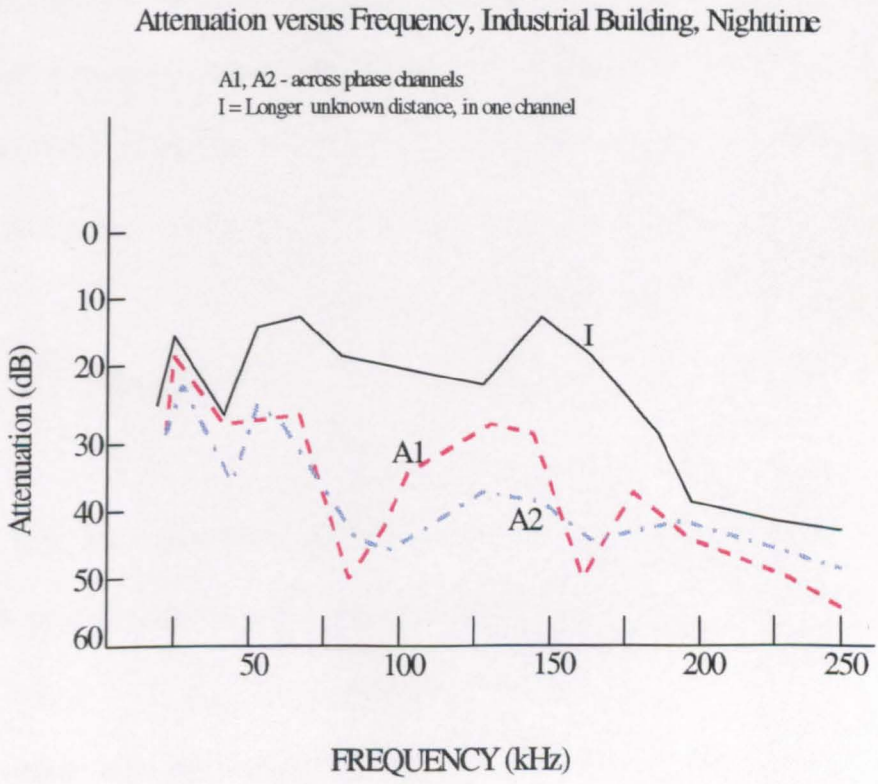

Figure 26 - Attenuation versus Frequency, Industrial Building, Night-time

3.4 Loaded Line Impedance

The characteristic impedance of an *unloaded* transmission line is given by the equation:

$$Zo = \sqrt{R + j\omega L / G + j\omega C} \qquad (1)$$

where:

R, Resistance in ohms per unit length

G, leakance in siemens per unit length

C, capacitance in farads per unit length

L, inductance in henries per unit length

Attenuation also increases [65,68,75,89,109,116] as the square root of the frequency in a transmission line. At the frequencies of Low Voltage Signalling, 3 kHz to 148.5 kHz, the ideal transmission line can be approximated by the shortened version of this formula since $\omega C >> G$ and $\omega L >> R$ and therefore:

$$Zo = \sqrt{L/C} \qquad (2)$$

Where L is the inductance per unit length and C is the capacitance. Thus the characteristic impedance is purely resistive and can be independent of frequency.

The problem with the analysis in equations (1) and (2) is that power lines have multiple tributary connections to other overhead and underground lines, and every time an electrical device is added to the network the characteristics, of a loaded power line, compared to an unloaded transmission line, can change. Previous

practical measurements [17, 25, 26 and 120] had shown that a *uniform* High Voltage Distribution Network, with no connections to other overhead or underground lines, may have a typical value of 450 ohms, whilst values [10, 16, 72, 120], of 1 - 20 ohms for loaded 230 volt lines, and 5-150 ohms, for a Low Voltage Distribution Network, were typical.

Recent measurements, reported by CENELEC SC105A WG4, for prEN50065-4, highlights the problem. A limited programme of network impedance measurement were carried out in three European countries, France, Germany and Italy. These results are considered to be representative of similar Low Voltage Distribution Networks in other EEC member nations, and show that the static distribution of impedance values in the frequency range, 3 to 148.5kHz, specified by prEN 50065-1 for Mains Signalling, have the following characteristics:

- The Low Voltage Distribution Network impedance is very rarely greater than 20Ω.

- 90% of the values of the Low Voltage Distribution Network impedance lie in the range 0.5Ω to 10Ω

- The most frequent Low Voltage Distribution Network impedance values are around 5Ω.

- The impedance value depends on where the measurement was taken on the Low Voltage Distribution Network.

The reason for these varying impedance characteristics was that, although in general the Low Voltage Distribution Network has a complex 'tree or branch' structure of phase and neutral conductors, and earth lines, with the power supply point situated on the 'root' of the tree, and the consumer loads distributed on the branch ends, the actual physical layout, of Low Voltage networks, could vary for different consumer loads. The consumer loads are normal household (cookers, fridges) and other professional electric equipment (HIFI, Radio) which have a very low impedance in the range 0.1Ω to 10Ω, mainly due to the radio interference suppression filters fitted in them. In taking these consumer loads into consideration the impedance of any cables or lines in the Low Voltage Distribution Network is not negligible by comparison.

3.5 Delay Distortion on the Low Voltage Distribution Network

Draskovic, Simic and Nicoara [25,26] suggest it is possible to model the delay distortion of a signalling system, on the Low Voltage Distribution Network, by using a linear filter to simulate the Low Voltage Distribution Network characteristics. A signal passed through such a filter incurs amplitude delay distortion which can be shown [25,26] to be derived from the phase/frequency characteristics of the filter model. Low Voltage Signalling systems also have bandwidth limitations [4, 7, 8, 9, 20, 21, 23, 49] which can lead to a non-linear phase response and envelope delay distortion in Amplitude Modulated Low Voltage Signalling systems.

3.6 Noise and Interference Sources on the Low Voltage Distribution Network

The sources of noise and interference [16,17,25,26,30,69,72] on a Low Voltage Distribution Network can be broadly categorised as follows:

Harmonic Noise: Introduced mainly by AC motors

Household Noise: From household equipment, cookers, vacuum cleaners .

Industrial Noise: From machinery or generators and usually of a bursty nature.

Interference Noise: From other communication systems sharing the Low Voltage Distribution Network

3.7 Characteristics of a Low Voltage Signalling System

It is proposed that the modulation system for a Low Voltage Distribution Network should meet the following criteria, if it is to operate with the varying impedance, voltage and noise values detailed in sections 3.1 to 3.6.

a. **Frequency Conversion**

A baseband signal containing metering data should be able to modulate a Power Line Carrier frequency and be "translated" to a higher frequency within the Mains Signalling Band, 3 to 148.5 Khz, defined by prEN50065-1, where there may be less probability of interference from sources, such as a TV Line signal of 15 kHz, detailed in section 3.6.

b. **Signal/Noise Ratio**

The choice of modulation system should improve signal to noise ratio by optimising the available channel bandwidth of 3 to 148.5 kHz, or subdivisions of, for Low Voltage Signalling systems.

c. **Resilience**

The modulation scheme used for low voltage signalling systems must be able to maintain a specified error probability for a given metering data rate even with the high levels of attenuation, noise and interference present on power lines as discussed in sections 3.1 to 3.6.

d. **Power Efficiency**

In achieving a given specified error performance a Remote Meter Reading system must make efficient use of transmitted power. Link budget calculations with adequate safety margins against errors must be achievable

e. **Low Carrier to Cochannel Interference Power Ratio (CCI)**

The modulation system chosen for a a Remote Meter Reading system must allow the available bandwidth of 3 to 148.5kHz to be shared with other users without causing interference.

f. **Low Out of Band Radiation**

Harmonic voltages produced by the Low Voltage signalling system must be of such a level that they do not cause interference with other communications systems outside the 3 to 148.5kHz frequency band.

g. **Constant or Near Constant Envelope**

A constant or near constant low voltage signalling pulse shape is required to avoid waveform transition at any change of data state which can cause baseband spectrum spreading outside any allocated channel within the 3 to 148.5kHz frequency band.

3.8 Low Voltage Signalling Modulation Methods

Modulation on a Low Voltage Signalling system is performed by causing a variation to the Low Voltage sinusoidal carrier by one, or a combination of, the

amplitude, frequency, or phase characteristics, of the baseband signal. A Low Voltage sinusoidal carrier is given by the equation [30]:

$$V_C = A \cos(\omega\tau + \phi) \qquad (3)$$

and the three modulation methods are Amplitude Modulation (AM), Frequency Modulation, and Phase Modulation, since the parameters involved in equation (3) are amplitude A, frequency $\omega/2\pi$, and phase ϕ.

3.8.1 Amplitude Modulated Low Voltage Signalling

Amplitude Modulated Low Voltage Signalling (AMLVS) is one form of modulation used on Power Lines. The envelope of an Amplitude Modulated Low Voltage Signalling carrier wave follows the waveform of the modulating signal, and is shown in Figure 27.

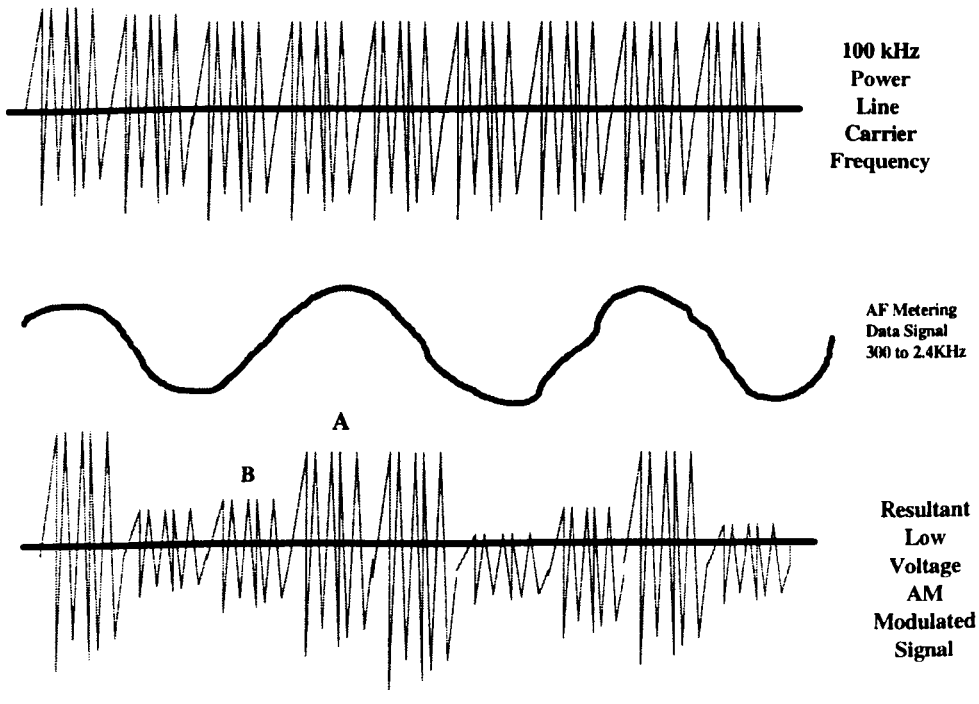

Figure 27 - Amplitude Modulated Low Voltage Signal

The Low Voltage Signalling demodulator recovers this waveform from the envelope at the receiver. For a Low Voltage sinusoidal carrier signal, V_c = Vc cos ωct , modulated to a depth m , (where m is the modulation depth of an AM waveform given by the ratio of the maximum amplitude (A) minus the minimum amplitude (B) shown in Figure 27, of the modulated signal divided by A + B, m = A-B/A+B), by a sinusoidal modulating signal, V_m = Vm cos ωmt, the resultant Amplitude Modulated Low Voltage Signal is

$$V = (1 + m \cos \omega mt)\, V_c \qquad (4)$$

which equals:

$$V = (1 + m \cos \omega mt)\, \mathrm{Vc} \cos \omega ct \qquad (5)$$

$$= \mathrm{Vc}[\cos \omega ct + 1/2\, m \cos(\omega c + \omega m)t + 1/2\, m \cos(\omega c - \omega m)t \qquad (6)$$

The Amplitude Modulating signal, of Figure 27, contains several modulating frequencies, ranging from f_1 300 Hz, to f_2 2.4 KHz, and the resultant Amplitude Modulated Low Voltage Signal shall contain a number of other frequencies in addition to the carrier fc, for example fc + f_1, fc - f_1, fc + f_2, and fc - f_2. The Amplitude Modulated Low Voltage Signal is said to consist of two *sidebands* occupying the same bandwidth as the baseband signal. In the *upper sideband,* the highest frequency equates to the highest frequency in the baseband signal and in the *lower sideband* the lowest frequency equates to the lowest frequency in the baseband.

Amplitude Modulated Low Voltage Signalling makes very inefficient use of transmitted power, as the information content is transmitted only in the sidebands, but the majority of the power is contained in the carrier, normally two-thirds of the

transmit power is contained in the carrier whilst only one sixth is contained in either sideband. Amplitude Modulated Low Voltage Signalling systems do however use very simple equipment and can therefore be very cost effective.

3.8.2 Frequency and Phase Modulated Low Voltage Signalling

The instantaneous angular frequency of an alternating Low Voltage Signal is given by:

$$\omega = d\phi / dt \text{ radians/s} \qquad (7)$$

The relationship between the frequency and phase of an alternating Low Voltage Signal shown in equation (7) categorises both forms of modulation as *Angle Modulated Low Voltage Signalling.*

An alternating Low Voltage Signalling system sinusoidal carrier modulated by a sinusoidal baseband signal can be represented by:

$$v_c = \mathrm{Vc} \cos [\omega_c t + \beta \sin \omega_m t] \qquad (8)$$

where β = *modulation index*

The maximum frequency deviation is given by $\Delta F = \pm\beta f_m$ and the maximum phase deviation by $\Delta\phi = \pm\beta$ since:

$$d\phi / dt = \omega_m \beta \cos \omega_m t \qquad (9)$$

In Frequency Modulated Low Voltage Signalling (FMLVS) the deviation of the Low Voltage Signalling carrier frequency is normally proportional to the modulating voltage and therefore the frequency deviation is technically independent of the modulating frequency whereas β (the modulation index) is inversely proportional to it. For Frequency Modulated Low Voltage Signalling systems the modulation index is therefore defined as β = maximum frequency deviation of the carrier/ maximum baseband frequency.

For Phase Modulated Low Voltage Signalling (PMLVS) the phase deviation of the Low Voltage Signalling carrier frequency is also proportional to the modulating voltage but β (the modulation index) is independent of the modulating frequency. In Phase Modulated Low Voltage Signalling systems the information is conveyed by the instantaneous phase of the signal and subsequently any phase distortion in the link can cause distortion of the received signal. Any differential delay in the Low Voltage Distribution Network communications link, as shown in section 3.5, must therefore be balanced against the bandwidth available to convey the signal.

The frequency spectrum of a Frequency Modulated Low Voltage Signalling (FMLVS) signal also contains higher order sideband components [30] at frequencies related to the carrier by the equation

$$fc = \pm nfm \text{ (where n = 1,2,3,4,.....)} \qquad (10)$$

and the bandwidth is normally greater than that of Amplitude Modulated Low Voltage Signalling (AMLVS) systems but there is little energy contained in an

Frequency Modulated Low Voltage Signal (FMLVS) signal outside of the band $(1 + \beta)\, fc$ and an approximation can be made using Carson's rule of the bandwidth W, where:

$$W = 2Fm\,(1 + \beta) \qquad (11)$$

and therefore for Frequency Modulated Low Voltage Signalling (FMLVS):

$$W = 2(Fm + \Delta F) \qquad (12)$$

where ΔF is the maximum deviation.

In Frequency Modulated Low Voltage Signalling (FMLVS) systems the amplitude of the signal contains no information, and unlike Amplitude Modulated Low Voltage Signalling (AMLVS) systems, amplitude variations due to noise, attenuation and fading, such as discussed in sections 3.1 to 3.6, have no effect as long as the signal/noise ratio is approximately 12 dB. However noise can effect the phase of a signal and therefore its corresponding instantaneous frequency. Frequency Modulated Low Voltage Signalling (FMLVS) systems do however have an improvement in signal/noise ratio compared to Amplitude Modulated Low Voltage Signalling (AMLVS) systems for the same carrier power and same noise density at the receiver. This improvement is given by [30] as:

$$\text{output } S/N_{FM} / \text{output } S/N_{AM} = 3\beta^2 \qquad (13)$$

where S/N_{FM} and S/N_{AM} are the Signal/Noise ratios of Frequency Modulated Low Voltage Signalling (FMLVS) and Amplitude Modulated Low Voltage Signalling (AMLVS) respectively

In Phase Modulated Low Voltage Signalling (PMLVS) the frequency deviation β *fm* is proportional to the amplitude as well as its phase and therefore for analogue signals, for example, a major proportion of the energy is at the lower end of the baseband, and Phase Modulated Low Voltage Signalling (PMLVS) is inefficient compared to Frequency Modulated Low Voltage Signalling (FMLVS) in terms of bandwidth. Therefore Frequency Modulated Low Voltage Signalling (FMLVS) systems tend to be used more for analogue transmission in Low Voltage Signalling. Phase Modulated Low Voltage Signalling (PMLVS) is however very efficient for digital transmission on Power Lines and this subject is discussed in more detail in section 3.9 where the relevance of phase modulated and other digital systems in Low Voltage Signalling systems is discussed.

3.9 Digital Modulation Types Suitable for Low Voltage Signalling

In a digital Low Voltage Signalling system a modulator will map a sequence of metering data, in the form of binary digits, which shall result in a change in a corresponding set of discrete carrier amplitudes, carrier phases or frequency deviations of the Low Voltage Signalling carrier frequency. The digital modulation methods generally used on Low Voltage Signalling Systems are:

a. Amplitude Shift Keying (ASK)

b. Frequency Shift Keying (FSK)

c. Phase Shift Keying (PSK)

d. Spread Spectrum Techniques.

Frequency Shift Keying and Amplitude Shift Keying modulation systems have tended to be used on Low Voltage Signalling systems [4,5,10,11,15], mainly because they are reasonable cost effective and simple to implement. However Spread Spectrum techniques, in their various forms (Frequency Hopping, Direct Sequence) are gaining in prominence [9,10,24,101,113,114]. ASK, FSK, PSK and Spread Spectrum techniques are the main modulation techniques detailed in the analysis but multi-level modulation schemes shall also be discussed.

3.10 Low Voltage Signalling Detection Methods

3.10.1 Synchronous Detection

Apart from the specific characteristics of the individual Low Voltage Signalling modulation systems the methods for detecting the modulated signals also need to be considered. There are two primary types of detection methods used in any Low Voltage Signalling modulation system. The first is coherent or synchronous Low Voltage Signalling detection, where it is assumed that at the demodulator, the received Low Voltage carrier signal and a locally generated signal, used in the demodulation process, have some form of fixed relationship. Such a relationship tends to add to the complexity of the Low Voltage Signalling receiver system used.

3.10.2 Non Coherent Detection

The second type of detection is non coherent Low Voltage Signalling demodulation, sometimes called "envelope" detection. This type of detection is the one normally used in existing Low Voltage Signalling modulation methods, for example ASK.

3.11 Optimum Channel Bandwidth and Data Rate of a Low Voltage Signalling System

It is proposed that the nominal data rate for Remote Meter Reading using Low Voltage Signalling based should be 1200 bits/s. A data rate of 1200 bits/s can be transmitted within a frequency bandwidth of approximately 2.4 kHz. Since a Remote Meter Reading communication systems must be flexible, and capable of being communicated by other means this data rate permits metering information to be transmitted on a standard telephone [65] voice or radio channel [37,38] which also have a bandwidth of 2.4 kHz. Gas and Water metering data could also be transmitted or received using radio or telephone line, if a Low Voltage Distribution network were not connected to a particular Customer's premises.

If the nominal bandwidth for metering data is set at 2.4 kHz, it is not unfeasible, given the proper modulation mechanism, and advances in digital processing, that this bandwidth could also be used in the future to provide voice circuits, or one of the Value Added Services, suggested in section 1.1.7, on the Low Voltage Distribution network. Table 6 lists the proposed types and designations of digital modulation schemes presently used and which could be used in Low Voltage Signalling. The following sections analyse the characteristics of these modulation systems and evaluate their potential suitability for Remote Meter Reading using Low Voltage Signalling.

Modulation Type	M Levels	Modulation Scheme	Carrier/Noise in dB (Typical)	Typical Use
Amplitude Modulation	Two	Coherent ASK	14.0	Power Line Carrier Radio and Slow Speed Data Systems
	Two	Noncoherent ASK	15.0	Power Line Carrier Radio and Slow Speed Data Systems
	Four or Sixteen	Quadrature Amplitude Modulation	14.0	Power Line Carrier Radio and Medium Speed Data Systems
Frequency Modulation	Two	Coherent Binary FSK	13.0	Power Line Carrier Radio and Slow Speed Data Systems, SCADA
	Two	Noncoherent Binary FSK	14.0	Power Line Carrier Radio and Slow Speed Data Systems, SCADA
	Four	4-CFSK	14.0	Power Line Carrier Radio and Medium Speed Data Systems
	Four	4-NCFSK	15.0	Power Line Carrier Radio and Slow Speed Data Systems, SCADA
	Four	MSK Coherent Detection	11.0	Power Line Carrier Radio and Slow Speed Data Systems, SCADA
	Four	MSK Differential Detection	11.0	Power Line Carrier Radio and Slow Speed Data Systems, SCADA
Phase Modulation	Two	Coherent Binary PSK	11.0	Power Line Carrier Radio and Slow Speed Data Systems, SCADA
	Two	Differentially Encoded BPSK	11.0	Power Line Carrier Radio and Slow Speed Data Systems,
	Two	Differential PSK	11.0	Power Line Carrier Radio and Slow Speed Data Systems, SCADA
	Four	4-DPSK	16.0	Power Line Carrier Radio and Slow Speed Data Systems, SCADA
	Four	QPSK	14.0	Power Line Carrier Radio and Slow Speed Data Systems, SCADA
	Four	Offset QPSK	13.0	Power Line Carrier Radio and Slow Speed Data Systems, SCADA

Table 6 - Typical Low Voltage Signalling Modulation Schemes

3.12 Low Voltage Frequency Shift Keyed (LVFSK) Signalling

In Low Voltage Frequency Shift Keying Signalling a Binary 1 corresponds to one frequency, and a binary 0 to a second frequency. There are many forms of Low Voltage Frequency Shift Keying (LVFSK). Figure 28 for example shows waveforms of both Low Voltage Continuous Phase Frequency Shift Keying (LVCPFSK) and Low Voltage Non Continuous Phase Frequency Shift Keying (LVNCPFSK) over one bit interval.

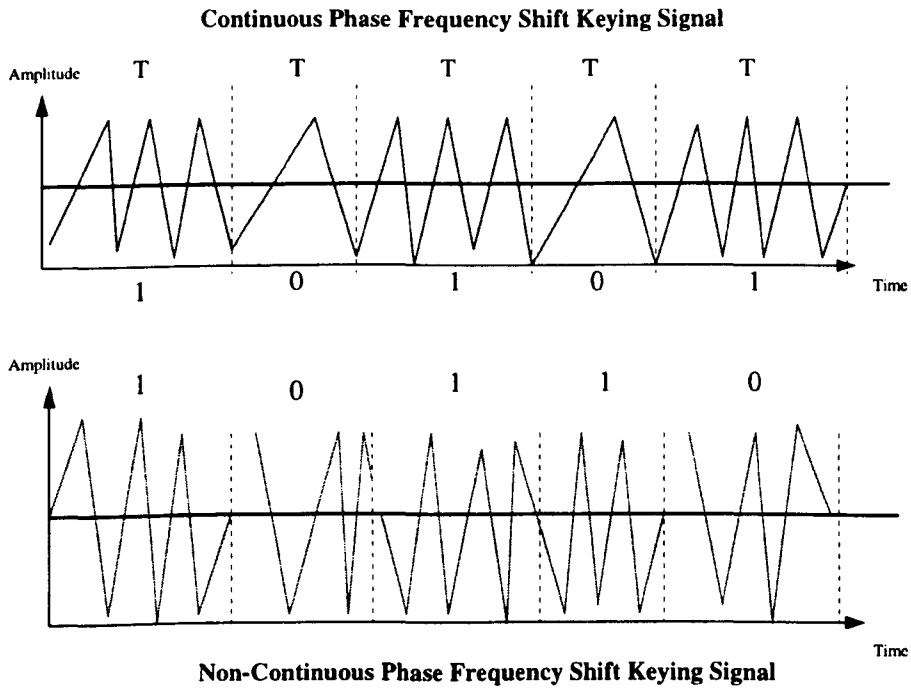

Figure 28 - Low Voltage CPSK and non continuous CPSK Signals

If the two frequencies used to represent a Binary 1 and Binary 0 are are f_1 and f_2 respectively, then

$$f_1 = f_c - \Delta f \text{ and } f_2 = f_c - \Delta f \qquad (14)$$

where Δf is the frequency deviation which f_1 and f_2 shift around f_c

and

$$f_c(t) = A\cos(\omega c + \Delta\omega)t \qquad (15)$$

From equation 14 the two frequencies, f_1 and f_2, differ by $2\Delta f$ hertz and the bandwidth of a Low Voltage Frequency Shift Keying (LVFSK) signal can be given by:

$$W = 2\Delta f + 2B \qquad (16)$$

where B = Bandwidth of the Baseband Metering data

The relationship between the deviation Δf, and B, the bandwidth of the Baseband Metering data was given in section 3.8.2 as β, where, β = maximum frequency deviation of the carrier/ maximum baseband frequency. In section 3.11 the nominal baseband bandwidth for metering data was proposed as 2.4 kHz. If β had a value of 1 then Δf would also equal 2.4 Khz and the maximum bandwidth of the Low Voltage Frequency Shift Keying (LVFSK) signal, from equation 16, would be 9.6 kHz. If however β had a value of 10, where Δf = 24 kHz, then the total bandwidth of the Low Voltage Frequency Shift Keying (LVFSK) signal would be 52.8 kHz. Given that the total allocated bandwidth for Low Voltage Signalling is 145.5 kHz, 3 to 148.5 kHz, the frequency deviation and baseband bandwidth, and subsequently the bandwidth of a Low Voltage Frequency Shift Keying (LVFSK) signal must be controlled or interference to other users of the Low Voltage Distribution Network could result. A limitation in baseband bandwidth would affect the data rate at which metering data could be transmitted and also the flexibility to provide alternative routing, by radio or telephone, suggested in section 3.11. The transmission of higher speed (>600 bits/s) binary data on a Low Voltage

Distribution Network using a binary Low Voltage Frequency Shift Keyed system is therefore difficult to achieve. In the case where β has a value of 1 and the Low Voltage Frequency Shift Keyed system is narrowband, such systems are very susceptible to single interference "hits". Interfering signals of this type, at a single frequency, occur quite regularly on Power Line systems as discussed in sections 3.1 to 3.6 and this makes Low Voltage Frequency Shift Keyed signalling systems on Power Lines especially vulnerable to data corruption.

3.13 Low Voltage Amplitude Shift Keyed (LVASK) Signalling

Low Voltage Amplitude Shift Keying systems tend to be much less complex than Low Voltage Frequency Shift Keying ones. Figure 29 shows the process of Amplitude Shift Keying a Low Voltage frequency carrier with a binary signal.

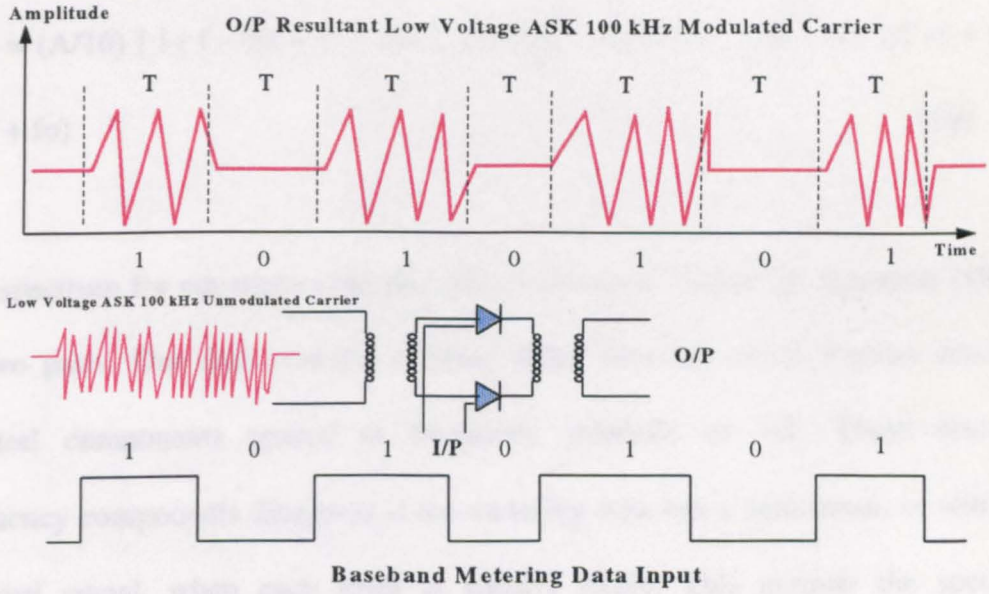

Figure 29 - Low Voltage ASK Modulated Signal

If the baseband metering data in Figure 29 has "M" states, or levels, and each of these levels is present for a period T, the Low Voltage Amplitude Shift Keyed waveform corresponding to the ith state Si(t), is equal to:

$$Si(t) = Di(t)\, A \cos\omega_o t \qquad (17)$$

where Di(t) is the ith level of a multilevel waveform with a level duration of T. If it is assumed that, as shown in Figure 29, the number of levels is restricted to two, as for a binary digital signal, and that the Low Voltage carrier frequency is related to the rectangular binary waveform bit duration T by:

$$\omega_o = 2\pi/T \qquad (18)$$

then the power spectral density (psd) is given by:

$$PSD = (A/16)\ [\ \int (f - fo) + (f + fo) + \sin \pi T(f - fo)/\ \pi T(f - fo) + \sin \pi T\ (f + fo)/\ \pi T(f + fo) \qquad (19)$$

The spectrum for equations (18) and (19) is shown in Figure 30. Equation (19) is in two parts. One part contains a Dirac delay function which implies discrete spectral components spaced at frequency intervals of 1/T. These discrete frequency components disappear if the metering data has a zero mean, or with an M-level signal, when each level is equally likely. This permits the spectral characteristics of the digitally modulated Low Voltage Amplitude Shift Keyed signal to be controlled during the system design by proper selection of the metering data to be transmitted. The second term is a continuous spectrum whose shape depends only on the spectral characteristic of the signal pulse. For the simple case of binary metering data, as shown in Figure 29, the impulse of the

discrete spectral component exists only at the carrier frequency due to the presence of the spectral nulls spaced at frequency intervals of 1/T.

The spectrum shown in Figure 30 contains 95% of its power in a bandwidth of 3/T with 67% of this being contained in the carrier, and 33% in the sidebands, a factor which makes ASK sytems very inefficent in power terms.

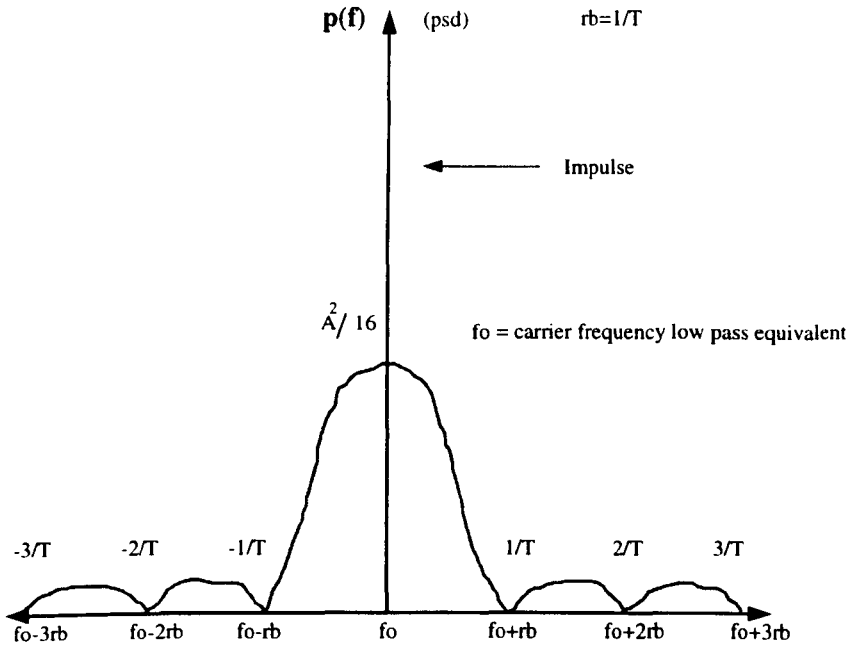

Figure 30 - Power Spectral Density of Low Voltage ASK

Low Voltage ASK systems are generally more susceptible to noise, and interference than Low Voltage FSK systems. The metering data is carried in the signal amplitude, which can have the noise and interference superimposed on it thus making detection difficult.

3.14 Low Voltage Phase Shift Keyed (LVPSK) Signalling

Figure 31 shows a Low Voltage Phase Shift Keyed modulated carrier. There are many basic similarities between Low Voltage Phase Shift Keyed and Low Voltage Amplitude and Frequency Shift Keyed systems.

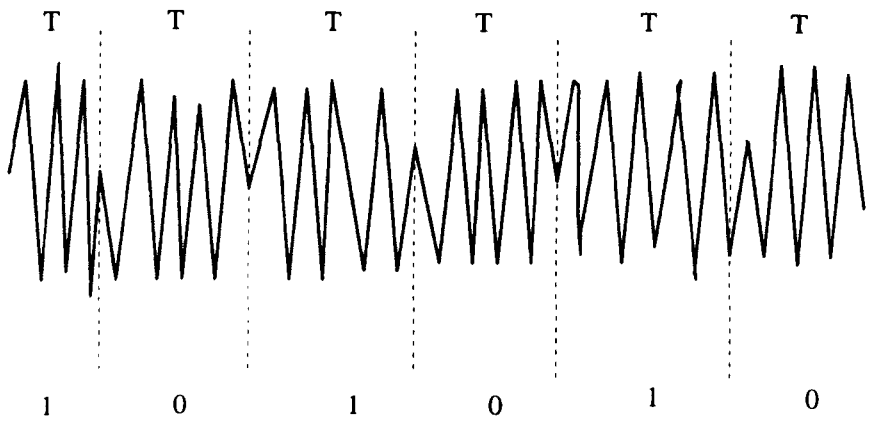

Phase Shift Keyed Signal

Figure 31 - Low Voltage PSK Signal

In binary Low Voltage PSK, the two signalling waveforms representing a "1" and "0" are given by [13]:

$$Si\ (t) = A\ COS\ \omega ot \qquad (20)$$

$$So\ (t) = -\ A\ COS\ \omega ot = A\ COS\ (\omega ot + \pi) \qquad (21)$$

Where Si (t) represents the binary 1, and So(t) the binary 0. In Low Voltage PSK systems the carrier amplitude remains virtually constant, but is switched between the +A and -A amplitude states. The -A state may alternatively be considered as a phase change of 180 degrees. The bandwidth requirements for Low Voltage ASK and Low Voltage PSK are virtually the same.

3.15 Multi-Level (M-ary) Low Voltage Phase Shift Keyed (MLVPSK) Signalling

Multi-Level (M-ary) Low Voltage Phase Shift Keying (MLVPSK) Signalling systems are used where higher data rates over smaller bandwidths are required. As in Pulse Amplitude Modulating baseband systems, a M-ary Low Voltage signalling system is used to transmit M separate digital signals over a single band-limited Low Voltage channel, for example by changing the phase of the Low Voltage frequency carrier in M discrete steps. The advantage of modulating the carrier of a Low Voltage transmitter with M separate digital signals, coming from M separate lower bit rate sources, is that the original Low Voltage signalling bandwidth is conserved. For example it is possible using Low Voltage Quadrature Phase Shift Keyed signalling systems to transmit a data rate of 9.6 Kbits/s in a band limited channel of 2.4 kHz, as suggested in section 3.11. A typical constellation and vector diagram for a Low Voltage QPSK signal is shown in Figure 32.

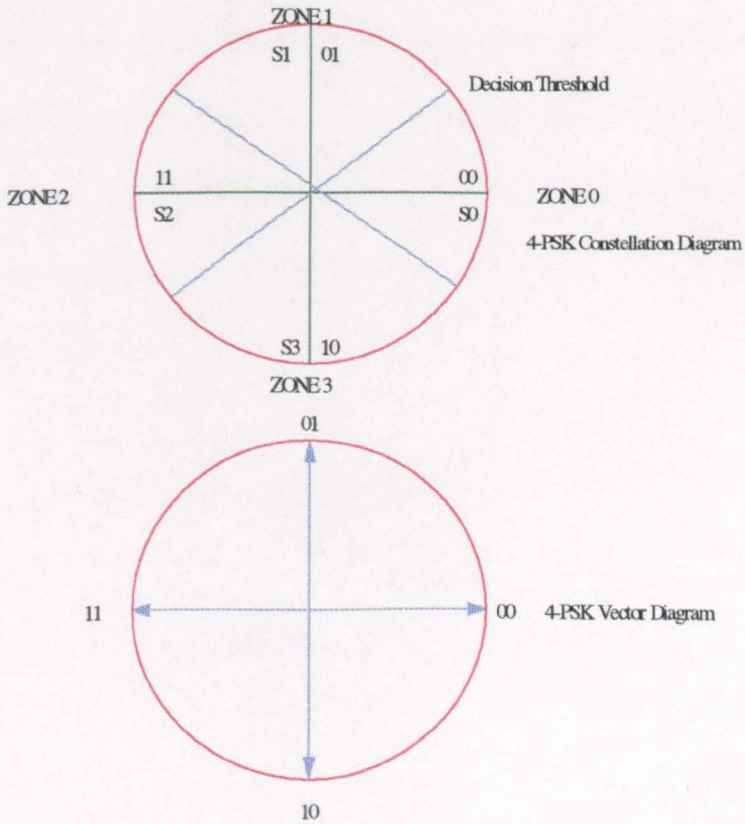

Figure 32 - Low Voltage PSK Constellation and Vector Diagrams

3.16 Spread Spectrum Signalling Systems

The basis of spread spectrum theory [27,28,29,31] is found in an expression derived by C.E.Shannon. This expression states that the channel capacity of a system is given by the equation:

$$C = W \log_2 (1+S/N) \qquad (22)$$

C = capacity in bits/sec

W = Nyquist bandwidth in hertz

N = Noise power

S = Signal power

Equation (22) shows that the maximum error free capacity (in data terms) that can be transmitted across any communications channel is directly related to the Nyquist bandwidth [13], and the signal to noise ratio in the channel concerned. This ability of a channel to transfer error-free information, compared with the signal to noise ratio existing in the channel, and the bandwidth used to transmit the information, can be applied in the above formula to obtain a new relationship. Let C be the desired system information rate and changing the logarithmic base obtains the expression:

$$C/W = 1.44 \log_e (1+S/N) \qquad (23)$$

For small Signal to Noise Ratios this can be amended by binomial expansion of equation (23)

$$\log_e(1+S/N) = S/N - 1/2(S/N)^2 + 1/3(S/N)^3 \ldots (-1<S/N<1) \qquad (24)$$

to give

$$C/W = 1.44\ S/N \qquad (25)$$

From equation (25) it is shown that by making N/S the subject of the equation, that:

$$N/S = 1.44W/C = W/C \qquad (26)$$

and for W

$$W = NC/S \qquad (27)$$

In real Low Voltage communications systems there is a restriction on the physical bandwidth, 3 to 148.5 kHz, that can be realised and a Low Voltage receiver needs a minimum signal level in the presence of noise to be able to successfully decode the signal. In Low Voltage Spread Spectrum systems, to obtain error free transmission in the presence of these restrictions, two criteria must generally be met:

- The transmitted Low Voltage bandwidth must be greater than the bandwidth or rate of the information being sent.

- Another function, other than the information being sent, is used to determine the resulting modulated Low Voltage bandwidth.

3.17 Low Voltage Spread Spectrum Signalling (LVSSS) Systems

The use of Low Voltage Spread Spectrum Signalling (LVSSS) Systems has become very popular. One reason for this popularity, is their apparent immunity to interference and noise [109,114]. Low Voltage Spread Spectrum Signalling (LVSSS) Systems can also provide some security against jamming, and deliberate tampering [27,28,29], which is important where billing or tariffing information is being transmitted. A Low Voltage Spread Spectrum Signalling (LVSSS) system is one in which the transmitted Low Voltage signal is spread over a wide frequency band, much wider than the minimum bandwidth required to transmit the information. Low Voltage Spread Spectrum Signalling (LVSSS) Systems tend to take a baseband signal of a few kilohertz wide, and "distribute", or spread it, over a bandwidth which may be many kilohertz wide. For example, using Low Voltage Amplitude Modulated Systems, as shown in section 3.8.1, the bandwidth of a normal channel would be twice the highest modulating frequency, or twice the bandwidth of the information itself. This type of signal is much narrower than, the theoretical bandwidth, of a Spread Spectrum system.

The signal distribution, in a Low Voltage Spread Spectrum Signalling (LVSSS) Systems, is achieved, by encoding the information with a pseudo-random code sequence, sometimes known as pseudo-noise, which is independent of the information itself. Performance measurements in a Low Voltage Spread Spectrum Signalling (LVSSS) System also differ from conventionally modulated systems, and are usually expressed in two terms, the Process Gain and Jamming Margin:

3.17.1 Process Gain

Theoretically Process Gain can be defined [28] as the "improvement gained by the systems process", or the improvement of performance of a Low Voltage Spread Spectrum Signalling (LVSSS) System which is obtained by bandwidth spreading

over a conventionally modulated, Low Voltage ASK, FSK, or PSK Signalling system. At the receiver, the Process Gain can be further defined as, the ratio between the signal-to-noise at the receiver output, where the signal has been "despread", to the Signal to Noise Ratio at the receiver input, where the Low Voltage Spread Spectrum signal appears. Process Gain is given by the following expression:

Process Gain = SNR at the receiver output/SNR at the receiver input. (28)

In practical Low Voltage Spread Spectrum Signalling (LVSSS) Systems however, a more efficient method of expressing Process Gain is given by the ratio of the spread bandwidth to the information rate of the system:

Process Gain = Gp = BW/Rinfo (29)

This definition for a Low Voltage Spread Spectrum Signalling (LVSSS) System should not be taken as implying that any Low Voltage Spread Spectrum system can operate, unrestrictedly, in the presence of high enough levels of interference, or deliberate jamming signals, whose energy levels and frequencies, are compatible with those of the received Low Voltage Spread Spectrum signal at the input to the receiver.

3.17.2 Jamming Margin

Jamming Margin (J) is used [28,29] in a Low Voltage Spread Spectrum Signalling (LVSSS) System as a "figure of merit" to describe the ability of the system to operate in the presence of interference/jamming. The Jamming Margin is given by:

$$\text{Jamming Margin} = J = Gp - SNRminimum \quad (30)$$

where SNRminimum is the minimum acceptable signal-to-noise ratio acceptable at the receiver input under normal working conditions.

3.18 Types of Low Voltage Spread Spectrum Signalling (LVSSS) System

There are two types of Low Voltage Spread Spectrum Signalling (LVSSS) System [27,28,29] normally used in Power Line Carrier communications networks. These are Frequency Hopping Low Voltage Spread Spectrum Signalling (FHLVSSS) Systems and Direct Sequence Low Voltage Spread Spectrum Signalling (DSLVSSS) Systems. It is proposed that, Frequency Hopping Low Voltage Spread Spectrum Signalling (FHLVSSS) Systems, offer more potential for use in Low Voltage signalling applications [9,31,101] than either Direct Sequence Low Voltage Spread Spectrum Signalling (DSLVSSS) Systems or conventional Low Voltage modulation systems, due to their ability to operate, virtually unrestrictedly, in the presence of the high levels of interference [105], present on Power Lines. A third Spread Spectrum system, known as pulsed or "chirp" modulation, is normally used in military or in Real Time Channel Evaluation (RTCE) systems for finding 'clear' frequency slots and although mentioned for completenesss is not covered in any detail in this thesis.

3.19 Frequency Hopping Low Voltage Spread Spectrum Signalling (FHLVSSS) Systems

Frequency Hopping Low Voltage Spread Spectrum Signalling (FHLVSSS) Systems could be more accurately termed, Low Voltage multiple frequency, code selected, frequency shift keying systems. The term is apt since, in a Frequency Hopping Low Voltage Spread Spectrum Signalling (FHLVSSS) System, the carrier frequency is shifted in a number of discrete steps or channels, by a code

sequence. Frequency Shift Keying, in its simplest form, normally consists of only two frequencies, one frequency representing a mark ("1"), and the other a zero ("0"). Unlike these simple FSK systems however, Frequency Hopping systems often have hundreds or thousands of frequencies to choose from. The number of frequencies, and the rate of change of frequency, is governed by the application in which the Frequency Hopping system is being used.

The most basic type of Frequency Hopping Low Voltage Spread Spectrum Signalling (FHLVSSS) System consists of, a code generator, and a frequency synthesiser, which, depending on the input of the code generator, can change frequency very quickly. Figure 33 shows an "ideal" Low Voltage Spread Spectrum Signal such a system should produce. The ideal Low Voltage Spread Spectrum Signal should, over a period of time, be perfectly rectangular, with the transmitted signals evenly distributed in every available frequency slot. The ideal Low Voltage Spread Spectrum transmitter would also transmit identical power outputs in every channel. At the receive end the Low Voltage Spread Spectrum Signal is mixed with a locally generated signal which is identical to the transmitted Low Voltage Spread Spectrum signal (it is produced by controlling the receive synthesiser with an identical code generator to that in the transmitter). The mixing process produces a constant difference, intermediate frequency signal. One of the most important tasks in Frequency Hopping Low Voltage Spread Spectrum Signalling (FHLVSSS) Systems therefore is the synchronisation of the receiver with the transmitted signal. The synchronisation is usually achieved by a "Master Control" station transmitting both a "Word of Day" and a "Time of Day" synchronisation sequence which allows the receiving stations to train to incoming signals.

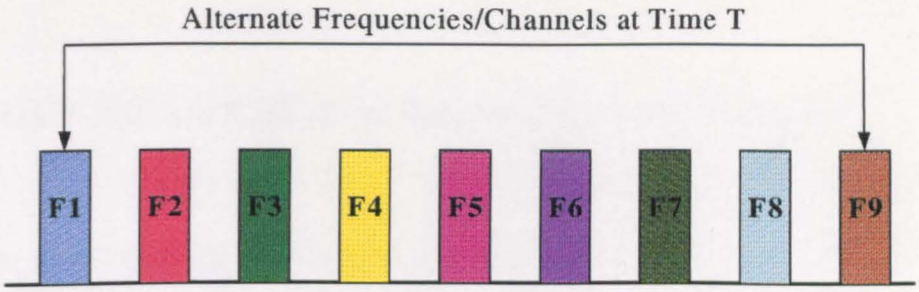

Figure 33 - Ideal Low Voltage Spread Spectrum Signal

This synchronisation process and its relevance to security is explained in more detail in chapter 7.8. Any received signal that is not a replica of the transmitted Frequency Hopping Low Voltage Spread Spectrum signal is spread by this multiplication/mixing process, with the locally generated signal.

The IF band pass filter immediately following the receiver mixer has only a fraction of the bandwidth of the locally generated signal. Any uncorrelated received signal will therefore have its power spectrum almost totally rejected by the Band Pass Filter, whereas a wanted Frequency Hopping Low Voltage Spread Spectrum signal would have its signal power enhanced through correlation with the locally produced reference.

A Frequency Hopping Low Voltage Spread Spectrum Signalling (FHLVSSS) System will be therefore greatly reliant on the pseudo-random code used to generate the frequency hopping sequence. For example the frequency range

presently used for mains signalling systems is shown in Figure 34. The frequency allocations within this bandwidth are:

a. 3 kHz to 95 kHz Low Voltage Signalling Band for use by the Utilities

b.95 kHz to 125 kHz Customer Communications Band unregulated

c. 125 kHz to 140 kHz. Customer Communications Band regulated with access protection of 132.5 kHz

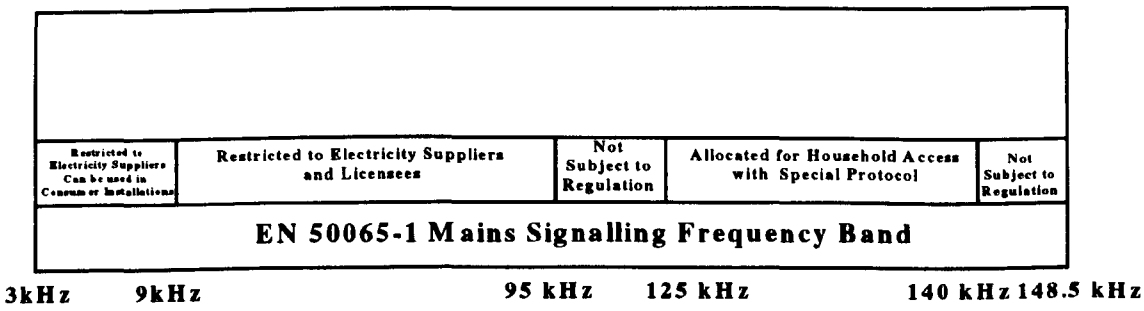

Figure 34: - EN 50065-1 Mains Signalling Frequency Band

By using the 3 kHz to 95 kHz Low Voltage Signalling Band allocated to the Utilities, the efficiency of a Remote Meter Reading, Frequency Hopping Low Voltage Spread Spectrum Signalling (FHLVSSS) System, could be maximised by a 5-stage sequence code which could provide 2^4-1 =15 discrete frequencies. The total bandwidth required for such a system can be given by the following expression:

total No of frequencies x frequency deviation of the modulating process (31)

Assuming theoretical channel rates of 1200 bits/s in a 2.4 kHz bandwidth, as suggested in section 3.11, then a 15 channel full duplex Frequency Hopping Low Voltage Spread Spectrum Signalling (FHLVSSS) system would require a Transmit Band of 36 kHz, and a Receive Band of 36 kHz. Such a Frequency Hopping Low Voltage Spread Spectrum Signalling (FHLVSSS) System could be operated in the available bandwidth of 92 kHz.

3.19.1 Frequency Hopping Low Voltage Spread Spectrum Signalling (FHLVSSS) System Channel Plan

The method described in section 3.19 could provide a Frequency Hopping Low Voltage Spread Spectrum Signalling (FHLVSSS) System Channel Plan with the following frequency allocations:

Customer Premises Equipment Frequency Hopping Txmit Bandwidth=56 to 92 kHz

Customer Premises Equipment Frequency Hopping Receive Bandwidth =10 to 46 kHz

Local Control Centre Frequency Hopping Receive Bandwidth =56 to 92 kHz

Local Control Centre Frequency Hopping Transmit Bandwidth =10 to 46 kHz

The allocation of this band to take into account a Frequency Hopping Low Voltage Spread Spectrum Signalling (FHLVSSS) System to be used in Remote Meter Reading is shown in Figure 35.

Figure 35 suggests a number of other frequency allocations. For example the band 42 to 56 KHz could be allocated to Engineering Order Wire (EOW), where EOW is an voice or data channel used for internal communication, for example between an engineer at a Substation site and another at a large customer site, or for the provision of a digitised Value Added Service telephone channel, as proposed in section 1.1.7, and the band 140.5 to 147.7 Khz could be allocated as Embedded or Data Control Channels.

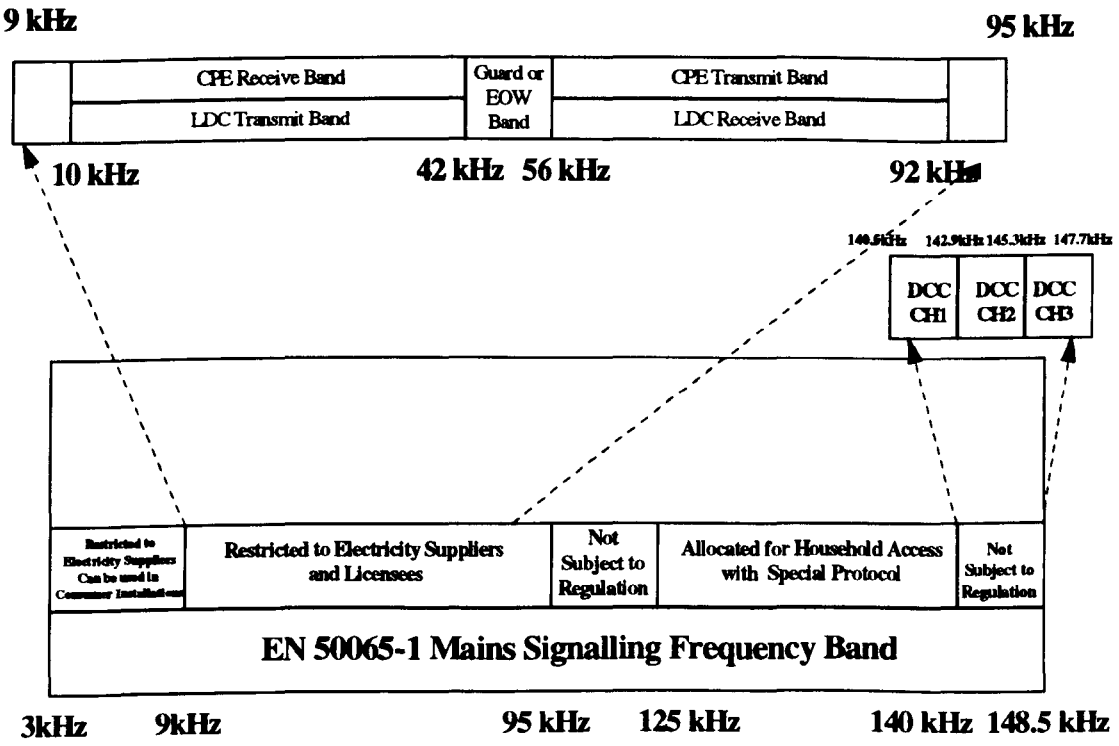

Figure 35: - EN 50065-1 Showing Frequency Hopping Low Voltage Spread Spectrum Signalling (FHLVSSS) System and Other Proposed Frequency Allocations

In conjunction with Network Management, to be discussed in Chapter 7, and the Protocols already discussed in Chapter 2, these three channels could be used to provide an embedded control channel facility for implementing a Totally Managed Remote Meter Communications Network (TMRMCN) which would control not only metering facilities but also other Remote Metering System communications elements. All network management data within a Network Element (meter or communications element) could be distributed via these Data Control Channels. The Metering Interface Unit (MIU), for example, receives a Frequency Hopping Low Voltage Spread Spectrum Signal containing metering data and the DCC. The MIU 'reads' out all the management data contained in the DCC and processes it.

All network elements connected via the DCC interface would effectively form a point-to-point network where the elements along such a route are interconnected via the Low Voltage Distribution Network or some other such communications medium. The information contained in the DCC therefore not only regulates the transmission and reception of data via lower level protocols but also controls the hardware used to establish the actual connection between communication partners.

The operation of such a system could also be realised by using a 6 stage sequence code to provide a 63 channel, semi duplex Remote Meter Reading, Frequency Hopping Low Voltage Spread Spectrum Signalling system. In general, the larger the sequence code, the smaller frequency steps such a system would produce.

3.20 Direct Sequence Low Voltage Spread Spectrum Signalling (DSLVSSS) Systems

Direct Sequence Low Voltage Spread Spectrum Signalling (DSLVSSS) Systems [27,28,29] are probably the most popular and widely used. A main reason for this popularity is that, unlike the Frequency Hopping Low Voltage Spread Spectrum

Signalling systems described above, they do not require the use of high speed frequency synthesisers. Direct Sequence Low Voltage Spread Spectrum modulation is a process whereby the Low Voltage carrier frequency is directly modulated by a code sequence. The modulation format may be LVAM (pulse), LVFM, or any derived amplitude or frequency modulated system. Generally, however, biphase Low Voltage Shift Keying (LVBPSK) is the modulation format used.

The carrier frequency in a Direct Sequence Low Voltage Spread Spectrum BPSK system is transmitted as one phase when the code sequence is "1", (one), and as a 180 ° phase shift from the original phase, when the code sequence is "0" (zero). This type of balanced modulation process is used, in Direct Sequence Low Voltage Spread Spectrum Signalling Systems, because the resultant Low Voltage carrier level is well below the noise threshold level produced by the code modulation which makes the signal difficult to jam or detect. More power is also available for sending useful information because the transmitter power is used to send only the code-produced signal. The signal has a constant envelope level so that transmitted power is maximised for the bandwidth used.

3.21 Frequency Hopping Low Voltage Spread Spectrum Signalling Using Digital Synthesis (DS)

One of the main difficulties in implementing Frequency Hopping Low Voltage Spread Spectrum Signalling systems has been that the faster the hop rate, the faster the switching speed required from the frequency synthesiser, and therefore the more complex the equipment design. There are three common methods of frequency synthesis used in Frequency Hopping Low Voltage Spread Spectrum Signalling. These methods are:

a. Direct Synthesis.

b. Indirect Synthesis.

c. Digital Synthesis.

One method for producing Frequency Hopping Low Voltage Spread Spectrum communications uses Digital Synthesis which, because it is relatively simple to achieve, will make the cost of Frequency Hopping Low Voltage Spread Spectrum equipment more economically viable for use in Remote Meter Reading systems. The basic building blocks of such a digital synthesiser are detailed in Figure 36.

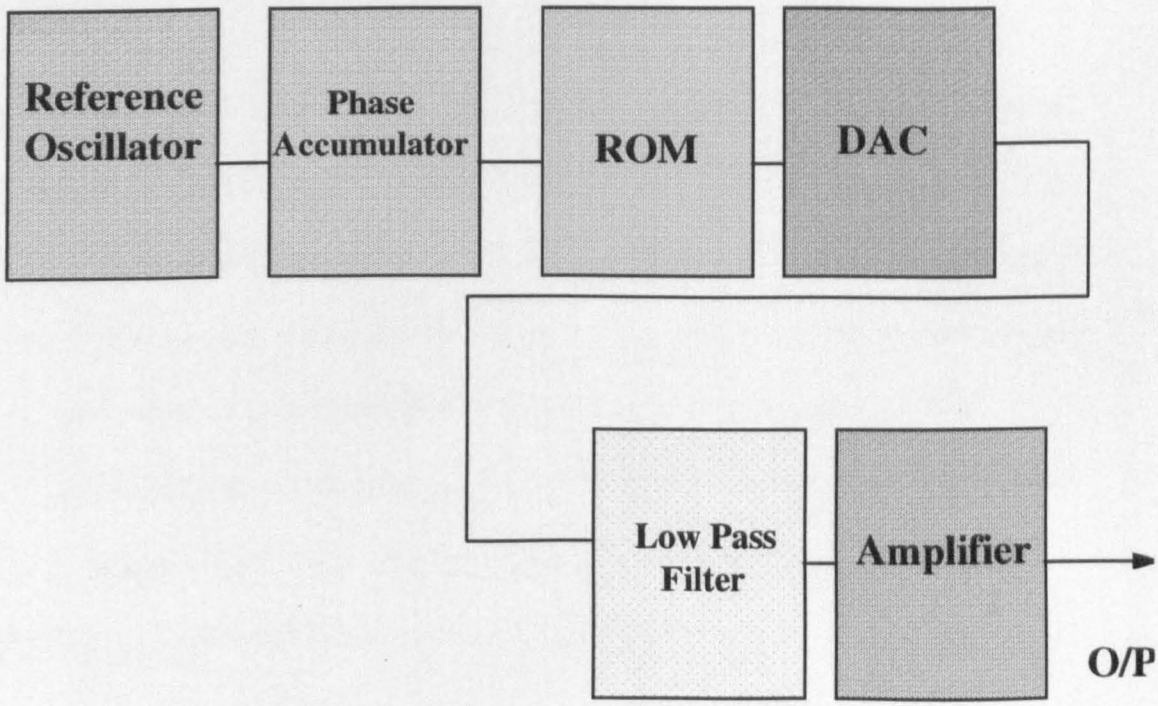

Figure 36 - Frequency Hopping Low Voltage Spread Spectrum Direct Digital Synthesiser

The main functional blocks of the synthesiser are:

a. A Phase Accumulator.

b. Read Only Memory(ROM)

c. A Digital to Analogue Converter(DAC)

d. Low Pass Filter.

e. Microprocessor Controller.

f. Clocking System.

The frequency of operation is entered as a binary number to the phase accumulator, from where it is shifted serially to the Read Only Memory (ROM). The ROM contains stored values of sinusoidal signals previously entered as part of the design process. From the ROM the signals pass to a Digital to Analogue Converter which is usually a "flash converter" device. The DAC chosen should normally be capable of matching a relatively wide band of frequencies, at its output, into a typical load impedance of 50 or 75 ohms. This capability of handling such load impedance's makes the design of the Low Pass Filter, which interpolates the signalling points simpler.

For Frequency Hopping Low Voltage Spread Spectrum use the cost of such a Digital Synthesiser, Printed Circuit Board mounted, is approximately £125.

3.22 Analysing Modulation Systems for Low Voltage Signalling

As well as the ability to operate in the presence of other communication systems, on a shared Low Voltage Distribution Network, another property to be assessed in the evaluation of a Low Voltage Signalling modulation system is the bandwidth efficiency.(Given the relatively narrow band available for communications). For a data system the spectral efficiency can be given by:

$$\text{Spectral efficiency} = rb/2B \text{ or} \tag{32}$$

$$\text{Spectral efficiency} = rb/W \tag{33}$$

where rb = bit rate

$$2B = 2 \times \text{Nyquist Sampling rate.} \tag{34}$$

W = Information bandwidth

The relevance of spectral efficiency in the evaluation of Low Voltage Signalling systems is included in an analysis method for comparing Low Voltage Signalling systems shown in section 3.23.

3.23 Analytical Method for Comparing Performance of Modulation Systems Used in Low Voltage Signalling

Indulkar [16] suggests that to establish the requirements of a Low Voltage Signalling System the overall communications network has to be analysed in order to achieve a quality of carrier that will meet both technical and economic objectives. Wilde and Wassenhove [10] actually trialled, a Low Voltage Signalling system using a frequency of 80 kHz and a simple FSK modulation technique, at bit rates of 200 bit/s, over distances of 300 and 500 meters. As a

result of these trials Wilde and Wassenhove [10] conclude that the operating frequency is a trade off between high noise and increasing attenuation at the higher end of the Low Voltage Signalling band, 3 to 148.5 Khz, and that the varying impedance as a function of time and place makes it useless to treat Low Voltage Lines as a transmission line.

In section 3.7 it was suggested that the processing, modulation, of any Low Voltage signal to make it suitable for transmitting over a Low Voltage Distribution Network is very important and should provide the following functionality.

- Frequency Conversion
- Signal/Noise Ratio
- Resilience
- Power Efficiency
- Low Carrier to Cochannel Interference Power Ratio (CCI)
- Low Out of Band Radiation
- Constant or Near Constant Envelope

The theoretical analysis method proposed is based on the criteria suggested by Indulkar, and the practical tests carried out by Wilde and Wassenhove for evaluating the performance of any modulation system, including frequency hopping systems, in terms of the functionality proposed in section 3.7.

Frequency hopping systems are one of a number of systems detailed in CCIR Report 652 [33] and although the report refers specifically to frequency hopping

radio systems its findings can also be related to Frequency Hopping Low Voltage Spread Spectrum Systems.

Like a radio signal, as a Low Voltage Signal propagates through a power line it loses energy, by several processes, including attenuation as shown in section 3.3, interference from other communications systems sharing the same Low Voltage Distribution Network and other equipment, for example HVDC converters (63), as shown in section 3.6.

The ideal analytical model must therefore consist of both desired and interfering propagation path losses of the wanted and interfering Low Voltage Signals, and the attenuation, other systems losses, gains and receiver selectivity. Figure 37 suggests how this analytical model could be physically realised in assessing the effects of one Low Voltage Signalling System on another system sharing the same power line.

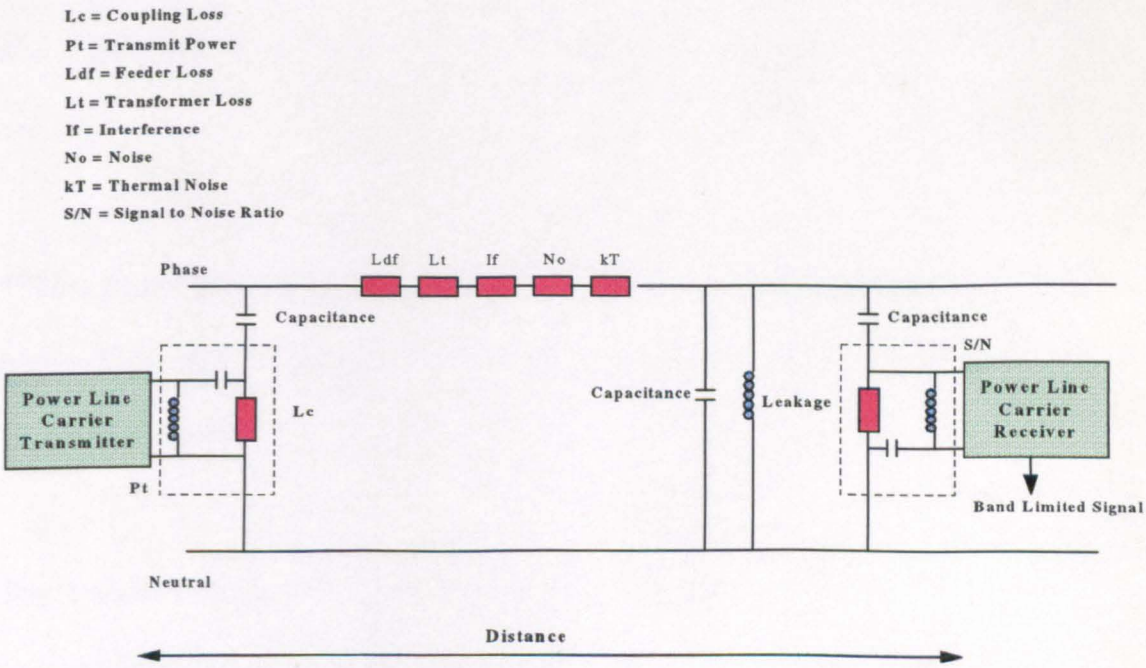

Figure 37 - Low Voltage Signalling System Analytical Model

For a conventional Single Channel Low Voltage Signalling Receiver, the received available signal power is given by the expression:

$$Pr = Pt - P_L \qquad (35)$$

and the Signal to Noise Ratio S/N is given by:

$$S/N = Pr - \kappa T + B + \Gamma \infty \qquad (36)$$

Where

Pr = Received Signal Power

κT = Thermal Noise Power Density (-204 dBW)(k = Boltzmanns constant)

B = Receiver Intermediate Frequency(IF) Bandwidth

P_L = Losses in Path from transmitter to receiver

$\Gamma \infty$ = Effective Noise Factor on High Voltage Lines Taken as 67.7 - 27.7 log Fm **

**This figure is actually taken from CCIR [34] as the Rural Noise Level on a Radio Link and is comparable to the levels found by De Wilde and Van Wassenhove [10]

The effective Signal to Noise power level per unit bandwidth for a wanted conventional Low Voltage signal is therefore equal to:

$$S/No = (Pt - 20 \log B - P_L) + (-204 - 67 + 27.7 \log Fm) - -FDR(df) \qquad (37)$$

If it is assumed that the conventional Low Voltage Signalling system is sharing the power line with a Frequency Hopping Low Voltage Spread Spectrum system as described in section 3.19, the bandwidth of the Frequency Hopping Low Voltage Spread Spectrum can be given by:

$$BWrf = N \times Bwch \tag{38}$$

where BWrf = Emitted bandwidth of the transmitted signal

BWch = Channel Bandwidth

N = Number of Channels

Depending on the "hopping rate" of the Frequency Hopping Low Voltage Spread Spectrum system concerned, a channel only dwells on any one allocated frequency for a fixed period of time. For example, if a frequency hopping signal has 10 frequencies in its "hop set", then its maximum Dwell Time (DT), given the probability of equal occurrence of each frequency, shall be:

$$Dtmax = 1/\text{Number of frequencies} \tag{39}$$

$$= 1/10$$

$$= 0.1 \text{ seconds}$$

and equation (37) for a conventional Low Voltage Signalling system must be modified for the equivalent Frequency Hopping Low Voltage Spread Spectrum

system, to take into account the Dwell Time (DT). The modified equation becomes

$$S/No = (Pt - 20 \log B - P_L) + (-204 - 67 + 27.7 \log Fm) - 20 \log DT \qquad (40)$$

If the Frequency Hopping Low Voltage Spread Spectrum signal is assumed to be the interfering signal then the level of the interference this signal shall cause at the Low Voltage conventional signalling receiver is also a function of the gains and losses the "interference signal" experiences on a Power Line between the Frequency Hopping Low Voltage Spread Spectrum transmitter and the Low Voltage signalling system conventional receiver and can be given by:

$$I_f/No = (Pt - 20 \log B - P_L) + (-204 - 67 + 27.7 \log Fm) - 20 \log DT - FDR(df) \qquad (41)$$

Equation 41 assumes that any individual frequency only occurs once in any hopset. If the mean rate of occurrence, R_b, is more than one in any particular hop set then equation 41 is amended to take this into account. Equation 42 shows the amended equation

$$I_f/No = (Pt - 20 \log B - P_L) + (-204 - 67 + 27.7 \log Fm) - 20 \log DT - FDR(df) + 20 \log R_b \qquad (42)$$

Equations 37 and 41 contain another important factor in the analysis of modulation systems suitable for Low Voltage Signalling systems, the Frequency Dependant Rejection (FDR). The FDR is a measure of the ability of a Low Voltage Signalling system receiver to reject an unwanted emission spectrum from

the transmitter of another Low Voltage Signalling system sharing the same power line. The FDR can be broken down into two terms [125]:

On Frequency Rejection (OFR): This a measure of the rejection when the interfering signal and the operating frequency of the Low Voltage Signalling receiver are identical.

Off-Tune Rejection (OTR): This is a measure of the rejection when the interfering signal and the operating frequency of the Low Voltage Signalling receiver are separated by some distance (in frequency terms this means the Low Voltage wanted signal could be 80 kHz whilst the interfering signal could be 85 kHz).

Since the worst case or maximum interference shall occur when wanted Low Voltage signal and unwanted Low Voltage signal are on the same frequency this is the case considered in the analysis method:

The OFR is given by [125] as:

$$\mathrm{OFR} = 10 \log \int_0^\infty P(f)\, df \Big/ \int_0^\infty P(f)\, d\,H(f)\, df \qquad (43)$$

where P (f) = Transmitted Emission Spectral Density Normalised to unity maximum power spectral density (w/hz)

H (f) = Receiver selectivity

Equation (43) can be approximated by:

$$OFR \cong \kappa \log (Bt/Br) \qquad (44)$$

where Br = Low Voltage Signalling System 3 dB bandwidth

Bt = Interfering transmitter 3dB bandwidth

k = constant

= 20 for frequency hopping signals

= 10 for conventional signals

The above analysis has revealed two important equations that can be used in the evaluation of Low Voltage Signalling systems. Equation 37 details what the received Signal to Noise Ratio at the input of a conventional single channel Low Voltage Signalling system receiver should be:

$$S/No = (Pt - 20 \log B - P_L) + (-204 - 67 + 27.7 \log Fm)\text{-}FDR(df) \qquad (37)$$

whilst equation (41) reveals what the same characteristic should be for a Frequency Hopping Low Voltage Spread Spectrum signal:

$$I_f/No = (Pt - 20 \log B - P_L) + (-204 - 67 + 27.7 \log Fm) - 20 \log DT \text{-}FDR(df) \qquad (41)$$

Equations (37) and (41) permit the analysis of Signal/Noise Ratio, Resilience, Power Efficiency, Low Carrier to Cochannel Interference Power Ratio (CCI), and Low Out of Band Radiation in a Low Voltage Signalling system by the following method.

CCIR Report 525[35] details Protection Ratios for the various combinations of unwanted and desired modulations in a shared frequency environment in order to achieve a certain level of performance. A Protection Ratio in a Low Voltage Signalling environment can be defined as follows:

"the minimum value of wanted to unwanted Low Voltage signal ratio, usually expressed in decibels, at the Low Voltage Signalling system receiver input, determined under specified conditions so that a desired quality of performance is realised at the receiver output"

Some of the Protection Ratios relevant to Low Voltage Signalling are shown in Table 7:

Interfering Signal / Wanted Signal	**Class of Emission**		**500HA1B**	**1K10F1B**	**Frequency Hopping**
			100 Baud Pulse Width = 100 mSecs	**50 Baud Pulse Width = 10 mSecs**	**15 hops/sec Dwell Time = 66.7 mSecs**
Class of Emission	**IF Bandwidth**	**Perfrmance Level**			
500HA1B	**500 Hz for S/N of 18 dB**	**PE 10 E - 2** **PE 10 E - 4** **PE 10 E - 6**	**11** **12** **13**	**12** **13** **14**	
1K10F1B	**1050Hz for S/N of 18 dB**	**PE 10 E - 2** **PE 10 E - 4** **PE 10 E - 6**	**0** **0** **1**	**6** **7** **8**	**9** **13** **15**

Table 7 - Protection Ratios for Typical Low Voltage Signalling Systems

Using the Protection Ratios in Table 7 and equations (37) and (41) it is possible to calculate and analyse an equivalent parameter for each type of Low Voltage signal shown in Table 7, in this case:

500HA1B: 100 Baud ASK Low Voltage Signalling System

1K101B: 50 Baud FSK Low Voltage Signalling System

and a 15 hop/sec Frequency Hopping Low Voltage Signalling system

This equivalent parameter is known as the Propagation Loss and can be defined as

"*the minimum value which a Low Voltage signal must attain in order to ensure a degradation in performance that will affect the minimum levels of quality of the received signal of another Low Voltage signalling system sharing the same Low Voltage Distribution Network*"

The minimum Propagation Loss P_{loss} is given by [34] as:

$$P_{loss} = (I/No) - (S/N) + (S/I)t \qquad (45)$$

Where

I/No = Interference/Noise ratio for conventional and frequency hopping Low Voltage signals as detailed in equations (37) and (41).

S/N = Signal/Noise Ratio within the Low Voltage Signalling System Receiver

(S/I)t = Appropriate Protection Ratio as defined in Table 7 for a given level of performance

A simplification that can be made in the analysis model is that the Low Voltage Signalling transmitter can produce both frequency hopping and conventionally modulated signals. This enables the comparison of performance of both systems to be made on the basis of equivalent characteristics, for example identical signal

power output levels. When this simplification is used the only difference is the modulation type used in either system.

3.23.1 Calculating the Propagation Loss for a Frequency Hopping Low Voltage Interfering Signal on a Shared Low Voltage Distribution Network

Consider the evaluation and performance of a Low Voltage 50 baud FSK Signal trying to share the same power line with a Frequency Hopping Low Voltage Spread Spectrum signal. The systems parameters used in the analysis model to evaluate the Propagation Losses for the two modulation systems could be as follows:

Transmit Power Pt = 116 dBμV (Cenelec SC105A)

$$OFR \cong \kappa \log (Bt/Br) \qquad (44)$$

For both Low Voltage Signalling systems

Low Voltage Carrier Receive Frequency for Conventional System = 60 kHz

Frequency Hopping Low Voltage Spread Spectrum Txmit Bandwidth=56 to 92 kHz

Hop 10 of 15 frequency Hop Set = 60 kHz

Conventional Low Voltage Receiver IF Bandwidth = 1050 Hz

Frequency Hopping Low Voltage Spread Spectrum Instantaneous Transmit Bandwidth = 2400 Hz

P_L = Losses in Path from transmitter to receiver for 300 metre length of power line

where

P_L = Mains Filter Loss(Lm) + Distribution Feeder Loss (Phase A)(Ldf) + Transformer Loss (Lt) + Medium Voltage Feeder Loss (Lvf) (46)

where Lm $\cong$ 3 dB

Ldf $\cong$ 10 dB (Typical)

Lt $\cong$ 50 dB (Typical)

Lvf $\cong$ 30 dB (Typical)

Assume in initial calculation that

$P_L \cong 93$ dB

B = 1050 Hz for 50 baud FSK system

$\Gamma\infty$ = 67 + 27.7 log Fm (Taken from CCIRR as rural noise level)

Fm = highest modulating frequency (Power Line Carrier = 92 kHz)

From Table 7 extract the Protection Ratio necessary for a given level of performance for a 50 baud FSK Low Voltage Signalling system in the case of sharing a power line with a Frequency Hopping Low Voltage Spread Spectrum system. In this case to ensure the following error performance of the FSK Low Voltage Signalling system in the presence of a Frequency Hopping Low Voltage Spread Spectrum signal the following Protection Ratios are needed:

Low Voltage FSK System Performance Parameters

Probability of Error = 1.10E-2 (1 error in 100 bits) Protection Ratio (S/I)t= 9dB

Probability of Error = 1.10E-4 (1 error in 10000 bits) Protection Ratio (S/I)t = 13dB

Probability of Error= 1.10E-6 (1 error in 1000000 bits) Protection Ratio (S/I)t = 15dB

The FDR is given by $= k \log Bt/Br$ (44)

$= 20 \log 2400/1050$

$= 7.18$ dB

Calculate the Interference Level of the Low Voltage Frequency Hopping Frequency Transmitted Signal at the Conventional Receivers Input from equation 41 is given by:

$I_t/No = (Pt - 20 \log B - P_L) + (-204 - 67 + 27.7 \log Fm) - 20 \log DT - FDR(df)$ (41)

$= (116 - 20 \log 1050 - 93) + (-204 - 67 + 27.7 \log 2.4.10+3) - 20\log 0.067 - 7.18$

$= (116 - 60.42 - 93) + (-204 - 67 + 93.63) - 30.65$

$= -37.42 - 177.37 - 30.65$

$= - 245.44$ dBμV

Calculate the Propagation Loss from equation (45)

$P_{Loss} = (I/No) - (S/N) + (S/I)t$ (45)

where:

$I/No = -245.44$ dBμV

S/N = 18 dB (from Table 7)

Probability of Error = 1.10E-2 (1 error in 100 bits) Protection Ratio (S/I)t= 9dB

Probability of Error = 1.10E-4 (1 error in 10000 bits) Protection Ratio (S/I)t = 13dB

Probability of Error= 1.10E-6 (1 error in 1000000 bits) Protection Ratio (S/I)t = 15dB

Therefore Propagation Loss =

254.44 dB for Probability of Error = 1.10E-2 (1 error in 100 bits)

250.44 dB for Probability of Error = 1.10E-4 (1 error in 10000 bits)

248.44 dB for Probability of Error = 1.10E-6 (1 error in 1000000 bits)

It is useful to compare these results against those of a 100 Baud Low Voltage ASK Signalling System against the same 50 Baud Low Voltage FSK Signalling System sharing the same power line. From equation (37) and using the same systems parameters for a Low Voltage ASK Signal:

$$S/No = (Pt - 20 \log B - P_L) + (-204 - 67 + 27.7 \log Fm)-FDR(df) \qquad (37)$$

$$= (116 - 60.42-93) + (-204-67 + 27.7 \log 500) +6.44$$

$$= -37.42 -196.2+6.44$$

$$= -227.18dB$$

In the case of Low Voltage Signalling FSK and ASK systems sharing the same power line the following protection ratios are required:

Probability of Error = 1.10E-2 (1 error in 100 bits) Protection Ratio (S/I)t= 0dB

Probability of Error = 1.10E-4 (1 error in 10000 bits) Protection Ratio (S/I)t = 0dB

Probability of Error = 1.10E-6 (1 error in 1000000 bits) Protection Ratio (S/I)t = 1dB

Therefore Propagation Loss =

$$P_{Loss} = (I/No) - (S/N) + (S/I)t \qquad (45)$$

where:

I/No = -227.18 dBμV

S/N = 18 dB (from Table 7)

245.18 dB for Probability of Error = 1.10E-2 (1 error in 100 bits)

245.18 dB for Probability of Error = 1.10E-4 (1 error in 10000 bits)

244.18 dB for Probability of Error = 1.10E-6 (1 error in 1000000 bits)

Table 8 summarises the results of the analysis for each of the Low Voltage modulation systems of Table 7:

Interfering Signal / Wanted Signal	**Class of Emission**		**500HA1B**	**1K10F1B**	**Frequency Hopping**
			100 Baud Pulse Width = 100 mSecs	**50 Baud Pulse Width = 10 mSecs**	**15 hops/sec Dwell Time = 66.7 mSecs**
Class of Emission	**IF Bandwidth**	**Perfrmance Level**			
500HA1B	**500 Hz for S/N of 18 dB**	PE 10 E - 2 PE 10 E - 4 PE 10 E - 6		**227.54** **226.54** **225.54**	**245.18** **245.18** **244.18**
1K10F1B	**1050Hz for S/N of 18 dB**	PE 10 E - 2 PE 10 E - 4 PE 10 E - 6	**245.18** **245.18** **244.18**		**254.44** **250.44** **248.44**

Table 8 - Minimum Propagation Losses Low Voltage Signalling Systems

3.24 Type of Spread Spectrum System Best Suited to Low Voltage Signalling

Following this analysis of modulation systems suitable for Low Voltage signalling it is proposed that Frequency Hopping Low Voltage Spread Spectrum signalling is the optimum system for Power Line Carrier use.

Of the types of Spread Spectrum system that have been discussed, both Direct Sequence Low Voltage Spread Spectrum and Frequency Hopping Low Voltage Spread Spectrum signalling have their relative advantages and disadvantages but most of the criticism of the Spread Spectrum Systems presently used in Low Voltage Signalling systems [93] is more relevant to Direct Sequence Low Voltage Spread Spectrum Systems.

Direct Sequence Low Voltage Spread Spectrum Systems are simple to implement, because the direct modulation process only requires multiplication of the signal by the spreading code. However due to its relatively small energy levels and bandwidth spreading properties, the same properties which also make Direct Sequence Low Voltage Spread Spectrum systems difficult to detect and intercept, can also cause a problem where very strong unwanted signals, for example, at the input of a receiver causes blocking of weaker signals. Since Direct Sequence Low Voltage Spread Spectrum signals are "spread" around the carrier in a continuous spectrum, and at very low power levels, single frequency interference directly affects Direct Sequence Low Voltage Spread Spectrum transmissions more than Frequency Hopping Low Voltage Spread Spectrum signals.

Frequency Hopping Low Voltage Spread Spectrum systems tend to use the greatest bandwidth but, unlike the continuous spectrums of Direct Sequence Low Voltage Spread Spectrum systems, Frequency Hopping Low Voltage Spread

Spectrum systems can be designed to operate in a non continuous spectrum. Other transmissions in the same part of the spectrum can therefore be accommodated, and in the eventuality that one particular frequency in a Frequency Hopping Low Voltage Spread Spectrum system hop set causes interference, is itself subject to interference, or is subject to attenuation, then that particular frequency can be "omitted" from the hop set. The main difficulty in implementing Frequency Hopping Low Voltage Spread Spectrum systems has been that the faster the hop rate, the faster the switching speed required of frequency synthesisers. However the use of digital synthesisers (DS) makes Frequency Hopping Low Voltage Spread Spectrum signalling systems feasible, since switching speeds of well below 1 μS are economically possible.

One way of thinking about this concept of digital synthesis, is to examine a sine wave. A sine wave, even if examined over only one or two cycles, consists of a number of points along that cycle(s). At any point of the cycle it is possible to ascertain the value (amplitude versus time (frequency)) of the sine wave. Using modern technology it is possible using one or two integrated circuits to process a number of these points in a relatively short time frame. By sampling and storing the amplitude of a number of such points, along a sine wave's progress, it is possible, using a low pass filter, to recreate the original sine wave by interpolating between these different points. This is similar to the method of recovering an analogue signal in the digital to analogue conversion process, where, as long as a signal is sampled at the Nyquist rate prior to the quantisation and encoding process, the original analogue signal can be recovered at the receiver, after the complimentary decoding and "dequantisation" processes, by passing it through a low pass filter.

If instead of storing samples of the sine wave on a time basis, samples are stored of the amplitude level on a phase basis, e.g. every 10 degrees, then these samples could be stored in a Read Only Memory. By programming in only one cycle of a sine wave, and using the phase accumulator's storage register to store a number which represents fractions of 360 degrees, the full range of a sine wave, then any frequency required, can be entered into the phase accumulator as a binary number.

3.24.1 Clocking in a Frequency Hopping Low Voltage Spread Spectrum System

In the digital synthesiser of a Frequency Hopping Low Voltage Spread Spectrum system some form of clocking device is required to control the "flow of numbers" into the phase accumulator. The maximum throughput of the synthesiser will be determined by the clocking devices frequency.

$$\text{Maximum Frequency Out} < \text{Frequency of clock}/2.2 \qquad (47)$$

The dividing factor of 2.2 is used in order to take into account any sharpness in the cut -off of the low-pass filter. For the maximum frequency of 92 kHz, as suggested in section 3.19.1, for a Frequency Hopping Low Voltage Spread Spectrum system, a clock frequency of 202.4 kHz is required. The clocking frequency also decides the size of the phase accumulator, in terms of the number of bits it can handle, and the size of potential frequency steps.

$$\text{Change in Frequency} = \text{Frequency of clock}/2^{N} \qquad (48)$$

where N is the number of bits in the phase accumulator.

Taking into account the same frequency band (10 to 92 kHz) a Frequency Hopping Low Voltage Spread Spectrum Signalling System, using a clock rate of 202.4 kHz, and a 6 bit phase accumulator, would produce frequency hopped steps of approximately 2.4 kHz with a "guard band" of 0.7625 kHz available either side of the signalling channels.

3.24.2 Transmitter and Receiver Filtering

Filtering will be required in the transmitter of a Frequency Hopping Low Voltage Spread Spectrum Signalling system if any sidebands and spurious emissions produced during the frequency synthesis operation are to be minimised. But at the receiver, a Frequency Hopping Low Voltage Spread Spectrum signal, due to its operation and nature, will not be as adversely affected by interference and impulse noise attributed to a wider IF filter bandwidth which can affect most conventionally modulated single channel Low Voltage Signalling systems.

3.25 Forward Error Correction (FEC) in Low Voltage Signalling Systems

Forward Error Correction (FEC) could be employed in Low Voltage Signalling systems to reduce the sensitivity of high level modulation schemes such as Quadrature Amplitude Modulation (QAM) to imperfections in a Low Voltage Distribution Network communications channel, caused by the characteristics, discussed in sections 3.1 to 3.6. However FEC systems normally require an overhead of at least 5% which in a Low Voltage Signalling system could create problems with bandwidth efficiency. The use of FEC in Low Voltage Signalling systems is further limited by the fact that coding and modulation are generally treated independently which can result in loss of information.

One alternative solution to the use of FEC could be Trellis Coded Modulation (TCM). TCM is attracting increasing interest as an alternative to the use of FEC as a very efficient way to combine coding and modulation. TCM has become standard practice in many high speed modems used for voiceband data transmission.

TCM is based on a code construction using Euclidian distance (ED) and soft-decision maximum likelihood sequence estimation (MLSE). Euclidean distance is based on the vector-space representation of signals and is based on choosing the signal 'closest to' the received signal. Euclidean distance is particular useful in probability of error calculations in power limited communication channels. A power-limited channel (or an energy-limited channel) is a channel where all the signal points lie within a sphere of radians $\sqrt{E}$, where E is the maximum energy (where E = PT and P is the maximum power allowed for transmission). It is apparent for example that in order to transmit at higher bit rates, where correspondingly larger numbers of signals are used, the signals become 'closer' together and thus the probability of error must increase. One method to overcome this problem is to go to higher multilevel modulation schemes, for example using three dimensional or orthogonal signals instead of two. In this case the signals are now 'further apart' and it would be expected the probability of error would decrease. Alternatively more signal points could be added by increasing the signal-to-noise ratio. Consider the case of a 64 QAM system for example with a minimum probability of error decision rule which assigns the decision to the signal 'closest' to the received signal point. This then defines a 'decision region' around each point. Euclidean distance in conjunction with MLSE can overcome information loss in a signal caused by other hard signal decision making coding

schemes and can therefore be used to optimise error control. Since TCM allows the the transition to higher level signal constellations high redundancy coding and subsequently coding gain without bandwidth expansion can be achieved, unlike FEC.

TCM operates with lower signal/noise ratios in smaller bandwidths for given error rates and probabilities than other modulation systems. To achieve this a redundant alphabet is used. In a TCM system k of the n bits of information to be transmitted, per 2D (two dimensional) symbol, enter a convolutional coder. In contrast to block codes the parity-check information in convolutional codes is distributed over a span of message symbols called the constraint span of the code. By this method long contiguous streams of message bits can be encoded continuously without the necessity of first grouping them into blocks. A convolutional encoder accomplishes this by using shift registers whose outputs are combined in a preset manner to give certain constraints within the encoded bit stream. A convolutional code of constraint span k can be generated by combining the outputs of k shift registers with v modulo-2 adders. At each clock time the outputs of the adders are sampled by a commutator and therefore n output symbols are generated for each input symbol giving a code rate of $1/n$.

For example if we have a convolutional coder with $k = 4$, and $v = 3$, and assume an input code sequence of 10110 (all shift registers must be set to zero initially), then the first message digit entering the encoder is a '1' and the output is '111'. The second digit is '0' and the corresponding output is '010'. Therefore the code generated by the encoder depends on previous message digits within the constraint span of the code.

At the decoder at each increment of the coded message there are eight (8) possible choices in the three bit coded example from above. The decoder examines these choices, in terms of the conditional probabilities between each choice and within the constraint span of the code, and makes decisions after each group of three input digits usually using a 'code tree'. Many decoding algorithms are used but normally the most popular for codes with short constraint spans is the Viterbi algorithm.

In TCM to send n bits of information in each signalling interval, a 2D constellation of 2^{n+1} points is used. Using a mapping procedure based on a partitioning concept this constellation is divided into a number of subsets in order to decrease the minimum free Euclidean distance. The resulting $k + 1$ coded bits specify which subset is to be used whilst the remaining $(n - k)$ information bits specify which subset is to be transmitted.

Since the redundancy of coding is in the time domain (the normal procedure in serial FEC coding) is replaced by a 'spatial redundancy' and there is no increase in the necessary bandwidth, although there is a corresponding increase in the modem complexity which can be overcome by state of the art technology. Figure 38 shows a typical 128 Trellis Coded Modulation scheme constellation.

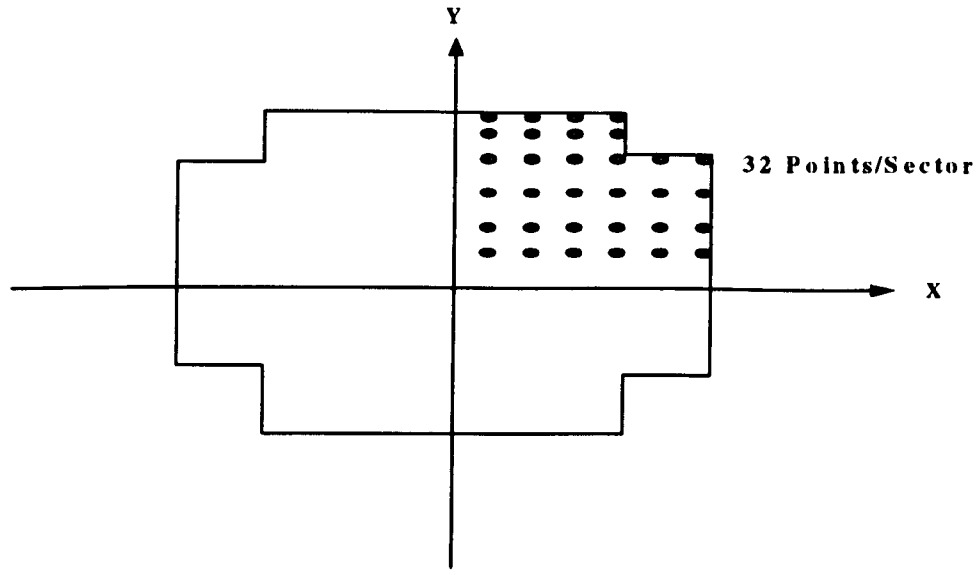

Figure 38 - 128 TCM Constellation

The possible use of error correcting codes is not restricted to conventional modulation systems and it may be that to provide improved error probabilities it is also one of the important issues that arises in the use of slow Frequency Hopping Low Voltage Spread Spectrum systems. It is suggested that advantages can be obtained from the use of a special form of cocatenated coding first suggested by Frank and Pursley [126] that may give superior performance, in terms of error protection, for Frequency Hopping Low Voltage Spread Spectrum systems over TCM ones. A method proposed by Frank and Pursley [126] suggests that because convolutional codes produce excellent performance on channels without memory and since interleaved Reed-Solomon codes provide excellent protection against block interference then a reasonable assumption might be to presume that a cocatenated version of these two schemes could provide very effective error control in voice and low data rate communication systems.

The application of such cocatenated coding schemes has not been considered previously in Frequency Hopping Low Voltage Spread Spectrum (or other) Low

Voltage Signalling schemes however the design and application of the encoding and decoding system is relatively simple and could be more cost effective than FEC or TCM schemes. Reed-Solomon decoding for example could be implemented in software and there are a number of integrated circuits available for convolutional decoding.

A cocatenated coding scheme for Frequency Hopping Low Voltage Spread Spectrum systems is shown in Figure 39 and its implementation is explained as follows.

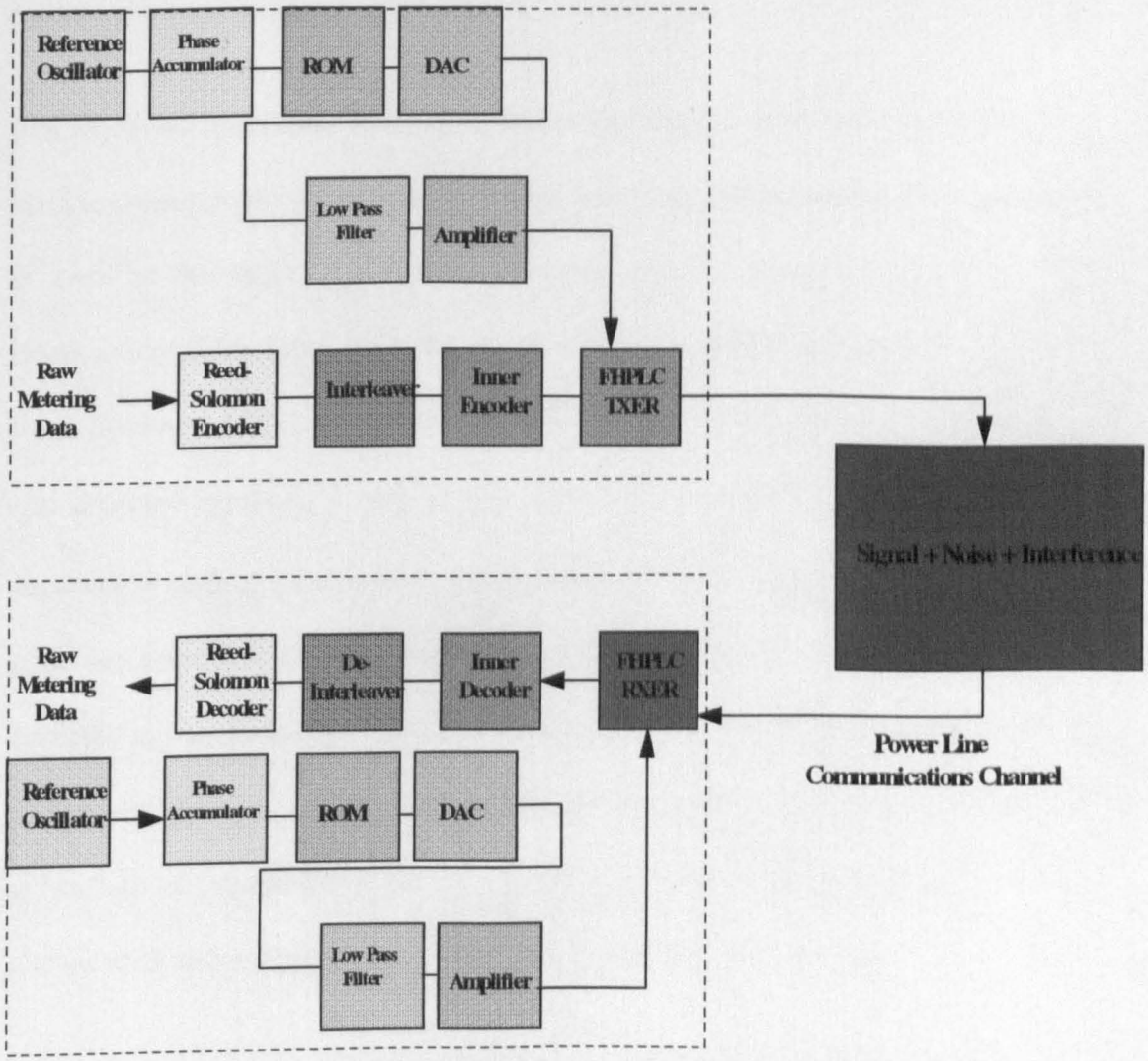

Figure 39: - Cocatenated Coding Scheme for Frequency Hopping Low Voltage Spread Spectrum Systems

Metering data would be initially coded using a Reed Solomon encoder. Where binary signalling is employed the coded symbols would consist of m consecutive digits which with a suggested coding scheme of (n,k) then $m = \log_2 n$.

Frank and Pursley [126] suggest the employment of an interleaver where the ordered pair (i, j) denotes the ith symbol of the jth Reed-Solomon codeword. Using this interleave method on a Frequency Hopping Low Voltage Signalling system means that coded symbols belonging to the same Reed- Solomon codeword can be transmitted in different Dwell Times. The advantage of this technique is that only one particular code symbol in any particular Dwell Time can corrupted by narrowband interference at any one time.

The Reed-Solomon code is further enhanced by the use of an 'inner code' which is used to correct intervals within the Dwell Time and reduces further the probability of error at the input to the Reed Solomon decoder shown in Figure 39. The interleaving of the Reed Solomon code symbols is shown in Figure 40. The (n,k) Reed-Solomon code has minimum distance $n - k + 1$ and therefore any errors, x, and accepted symbols, e, can be corrected if $2x + e \leq n - k$. The probability of decoding a code symbol incorrectly decreases if code symbols assumed to be in error are erased since a Reed-Solomon code can correct twice as many erased symbols as actual detected errors. Cocatenated codes could be usefully employed in Frequency Hopping Low Voltage Spread Spectrum systems and could provide several dB of improvement in coding gain over other coding systems where both narrowband and wideband interference is present on a Power Line.

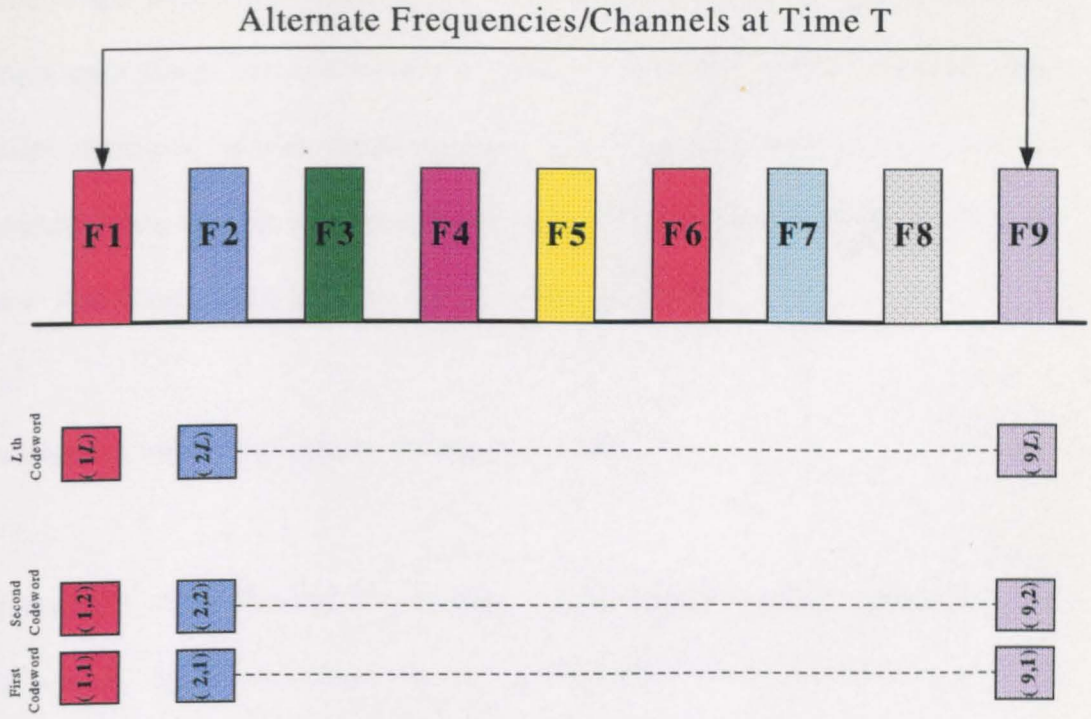

Figure 40: - Interleaving of Reed-Solomon Code Symbols

3.26 The Maximum Data Rate of a Power Line Carrier Communications Channel

Nyquist discovered that if an arbitrary signal is passed through a low-pass filter of Bandwidth, B, then this filtered signal can be completely reconstructed by making only 2B samples per second. Higher sampling rates than 2B are irrelevant because the higher frequency components that such sampling could recover have already been filtered out. If a signal consists of M discrete levels Nyquists theorem states:

$$\text{maximum data rate} = 2B \log_2 M \textit{ bits/sec} \qquad (49)$$

For example using a channel bandwidth of 2.4 kHz, as discussed in Section 3.11, the maximum binary data rate a noiseless Power Line Carrier Channel could transmit is 4800 bits/sec. Given the signal characteristics present on a typical power line, as shown in sections 3.1 to 3.6, this maximum theoretical rate would be almost impossible to achieve. If random noise is present on a power line for

example the situation considerably deterioriates. The amount of thermal noise present on a power line is normally measured by the signal power to noise ratio, usually described as the signal-to-noise ratio S/N. Shannon showed that the maximum data rate of a noise limited channel whose bandwith is W Hz, and whose maximum signal-to-noise ratio is S/N is given by:

$$\text{maximum number of bits/sec} = W \log_2 (1 + S/N) \qquad (50)$$

For example, a bandlimited Power Line Carrier Communication Channel of 2.4 kHz with a signal to noise ratio of 15 dB could never transmit more than approximately 24,000 bits/sec, no matter how many signal levels or what sampling rate is used. The Carrier to Noise ratios (C/N) given in Table 6, Chapter 3, for the various modulation system are the values for a system bandwidth which is the minimum required for successful transmission of the signal. This bandwidth in a digital system can also be termed the *minimum symbol rate* bandwidth or the *double -sided Nyquist* bandwidth and is equal to the system symbol rate expressed in hertz. The *minimum symbol rate* bandwidth can also be useful in evaluating bandwidth efficiency. For example if a 1 Mbit/s signal is to be transmitted on a Power Line, using 128 TCM, the symbol rate can be given by:

$$\text{Symbol rate} = \text{Data Rate}/ \log_2 \text{No of Symbols} \qquad (51)$$

which in the 128 TCM example given equals a Symbol Rate of:

$$\text{Symbol Rate} = 1.10^6/ \log_2 128 = 142.85 \text{ kbit/s} \qquad (52)$$

and the double sided noise bandwidth is equal to 142.85 kHz. Bandwidth efficiency can be given by:

Bandwidth Efficiency = Data Rate/ Bandwith required (53)

Bandwidth Efficiency = 1.10^6 /142.85 kHz =7 bits/Hz (53.1)

Whereas for a 16-QAM system the same data rate gives a symbol rate of:

Symbol Rate = 1.10^6/ $\log_2$ 16= 250 kbit/s (54)

and a bandwidth of 250 kHz.

Bandwidth Efficiency = 1.10^6 /250 kHz = 4 bits/Hz (54.1)

In terms of bandwidth efficiency therefore multi-level modulation schemes do offer the possibility of higher data rates on Low Voltage Signalling than conventional systems.

3.27 Assessment of Low Voltage Signalling Modulation Systems

In the analysis method shown in section 3.23 a common Figure of Merit, namely the Propagation Loss, has been established to enable this analysis to take place. In Low Voltage Signalling systems for example where there is the possibility of more than one communications system being present in a very restricted bandwidth, a comparison, of the effect of one system on another, can be made by measuring the attenuation levels, of the Low Voltage Signalling frequency, present at a specified distance (frequency separation) from the Low Voltage

Centre frequency. For example if the Low Voltage Signalling signal level was measured at some point from the its centre frequency, for example Fc ± Fd, where Fd is the frequency "distance" separating the measuring point from the centre frequency as shown in Figure 41, then the following results are typical of those that should be obtained for some of the modulation schemes described in sections 3.8 and 3.9:

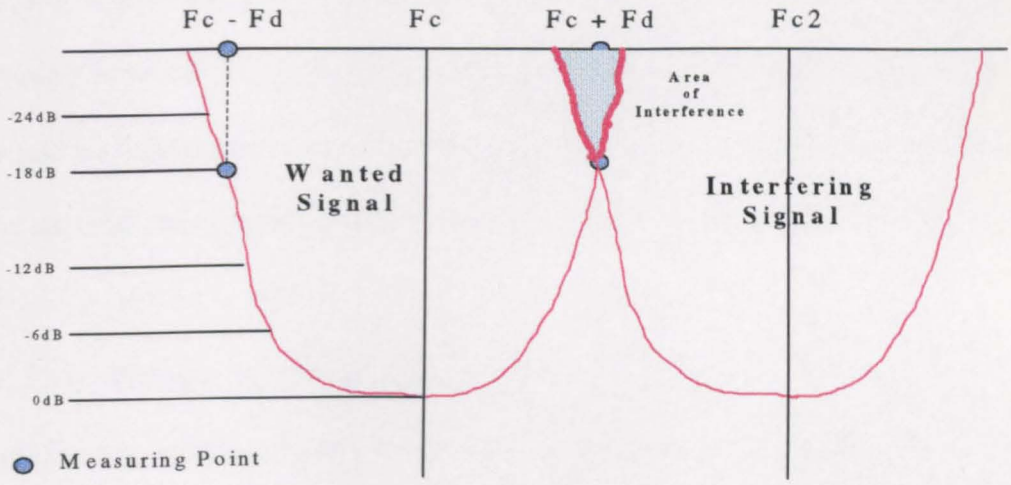

Figure 41 - Evaluating the Effect of One Low Voltage Signalling System on Another

Low Voltage Amplitude Modulated Signalling Systems: Sidelobes ≅ 25 dB down on the Fc

Low Voltage Phase Modulated Signalling Systems: Sidelobes ≅ 33 dB down on the Fc

Low Voltage Frequency Modulated Signalling Systems: Sidelobes ≅ 60 dB down on the Fc

For Low Voltage FSK systems the drop off is approximately given by 1/f to the fourth power. For Low Voltage PSK systems the drop off is approximately given by 1/f squared. From an initial examination of these figures it would seem that, from an adjacent channel perspective in a shared environment, a Low Voltage Frequency Modulated Signalling system is the most efficient system, since at the same "distance" from the carrier, as the other modulation methods, its signal value is ≅ 60 dB less than the carrier frequency. However this perspective is not as clear as it first may seem. It is assumed in the above figures, that for the Low Voltage Phase Modulated systems, abrupt phase discontinuities/changes would occur. This is not necessarily the case, since the use of good filtering circuits could improve the spectral characteristics of any Low Voltage Phase Modulated system.

A Low Voltage Signalling system must be resistant to the single frequency interference which prohibits the operation of many conventional, single channel, narrowband systems. It must cope with greater attenuation levels than a normal communications environment as shown in section 3.3. Table 8 shows that the Propagation Loss Figure for interference from a Frequency Hopping Low Voltage Spread Spectrum signal is 10-20 dB better than the equivalent Low Voltage ASK and FSK systems. For example, from Table 8, if a Frequency Hopping Low Voltage Spread Spectrum signalling system and an Low Voltage ASK signalling system were sharing the same Power Line the Frequency Hopping Low Voltage Spread Spectrum signalling system would have to be approximately 18 dB higher to cause a Probability of Error of 1E10-4 in the Low Voltage ASK systems performance than if the Low Voltage ASK system were sharing the same power line with a Low Voltage FSK Signalling system. In these circumstances and from the analysis, a Frequency Hopping Low Voltage Spread Spectrum system would

appear better equipped to overcome the potential interference and attenuation mechanisms present on a Power Line.

Given the restricted bandwidth, 3 to 148.5 kHz, presently available in Low Voltage Signalling applications, Frequency Hopping Low Voltage Spread Spectrum systems will not function as they do in other environments and Trellis Coded and other multi level modulation systems can offer superior performance. Frequency Hopping Low Voltage Spread Spectrum systems were however initially designed to operate in a military radio environment where the "noise" was likely to take the shape of deliberate interference or interception and an important factor in any analysis of Low Voltage Spread Spectrum systems but specifically related to Frequency Hopping Low Voltage Spread Spectrum, is the Dwell Time.

An alternative way of looking at this is, to consider the possible case where interference or noise exists on a specific frequency in a Remote Meter Reading system using Frequency Hopping Low Voltage Spread Spectrum Signalling. In this case the interference would only affect the system for the duration of the Dwell Time, after which the system changes to an alternate frequency. The greater the number of frequencies also allocated to a Frequency Hopping Low Voltage Spread Spectrum Signalling system, the less the Dwell Time, and the less time for the interference to affect the transmitted data. This attribute of Frequency Hopping Low Voltage Spread Spectrum signals also opens up another possibility, that of sharing the Power Line Environment with other signalling systems sharing the same band of frequencies.

Equation 46 indicates that it is possible for Frequency Hopping Low Voltage Spread Spectrum Systems to communicate, even when in high noise

environments, and with signal levels as much as 20 log DT lower, than the signal level of a conventional Low Voltage Signalling system. It also establishes another criteria, the more frequency hops present in the Frequency Hopping hopset, the minimum the Dwell Time and mean rate of occurrence R_b, the less likely the Frequency Hopping Low Voltage Spread Spectrum signal is to be interfered with, or cause interference to other systems.

Where the user is concerned with providing relatively cheap, slower speed, point to point, non secure Remote Meter reading using a Low Voltage Signalling system, and the error rate is accepted as being reasonably high at times, then conventional modulation systems, such as ASK and FSK, could be used. Low Voltage FSK signalling schemes in particular are ideal for the many low speed data applications currently used on power lines. The main reason for this popularity is the relative ease of producing Low Voltage FSK signal generation, and the use of less complex non-coherent demodulation mechanisms.

The main drawbacks with using Low Voltage ASK and FSK modulation schemes, even where line protocols [90], give added protection, is their relative susceptibility to interference, natural or man made, as shown in the analysis of Table 8 section 3.23.

Low Voltage ASK signalling systems tend to be much less complex than Low Voltage Frequency or Phase Shift Keying signalling systems but are more vulnerable to single frequency interference and noise, than FSK or PSK systems, and could be affected by the attenuation characteristics on many Low Voltage Signalling systems described in section 3.3. Low Voltage ASK Signalling systems

must bear the responsibility for much of the bad publicity surrounding the use of Low Voltage Signalling as a communications method.

Like Low Voltage ASK, Low Voltage Frequency Shift Keying (FSK) and especially Narrow Band Low Voltage FSK, tends to suffer from the attenuation characteristics present on power lines, especially at certain frequencies. Wide Band Low Voltage FSK systems are more resilient than NBLVFSK systems but are not, however, as efficient as Low Voltage Phase Shift Keying schemes, in terms of power and bandwidth usage. Low Voltage Phase Shift Keying systems can also suffer the same effects as Low Voltage ASK and FSK where single frequency operation is used.

A Multi-level Low Voltage signalling system is used to transmit M separate digital signals over a single band-limited channel, by changing the phase of the carrier in M discrete steps. The advantage of modulating the Low Voltage carrier of a transmitter with M separate digital signals coming from M separate lower bit rate sources is that the bandwidth is conserved. The performance of Low Voltage M-ary systems though, such as LVQPSK, can be severely degraded by linear distortion.

In coherent versions of many of the Low Voltage modulation systems described in sections 3.8 and 3.9, the receiver is synchronised to the transmitter. This means that the delay distortion introduced by any Power Line, as discussed in section 3.5, must be known at the Low Voltage signal receiver. Synchronisation is normally derived from time measurements which are made on the received Low Voltage signal. The carrier phase of the Low Voltage signal must generally also be considered when the receive signal is processed. The process of calculating the

delay, given the nature of a Power Line, may be very difficult to implement, and would make most conventional forms of coherent modulation unsuitable for Low Voltage Signalling operation.

It is concluded from the analysis in section 3.23 that it is possible for Frequency Hopping Low Voltage Spread Spectrum systems to share the same Low Voltage Distribution Network as conventionally modulated systems such as Low Voltage ASK and FSK and that by maximising the hopset and minimising the Dwell Time, and therefore the mean rate of occurrences of any particular frequency, and possibly also using a cotenated coding scheme, that bit error rates in this shared environment can also be minimised. The analysis through the use of the Propagation Loss provides an easily calculable method and common Figure of Merit for evaluating modulation systems performance on Low Voltage Signalling systems.

Chapter 4 - Power Line Carrier (PLC) and Radio Metering Communication Systems

4.1 General

Power Line Carrier [15, 19 or 23] is a process whereby data signals using Low Voltage modulation systems, as described in Chapter 3, are superimposed on power transmissions lines. Many of the circuits suitable for use in Power Line Carrier applications can be modified, or adapted, from radio and other communication systems [13 and 30], for use in Remote Meter Reading.

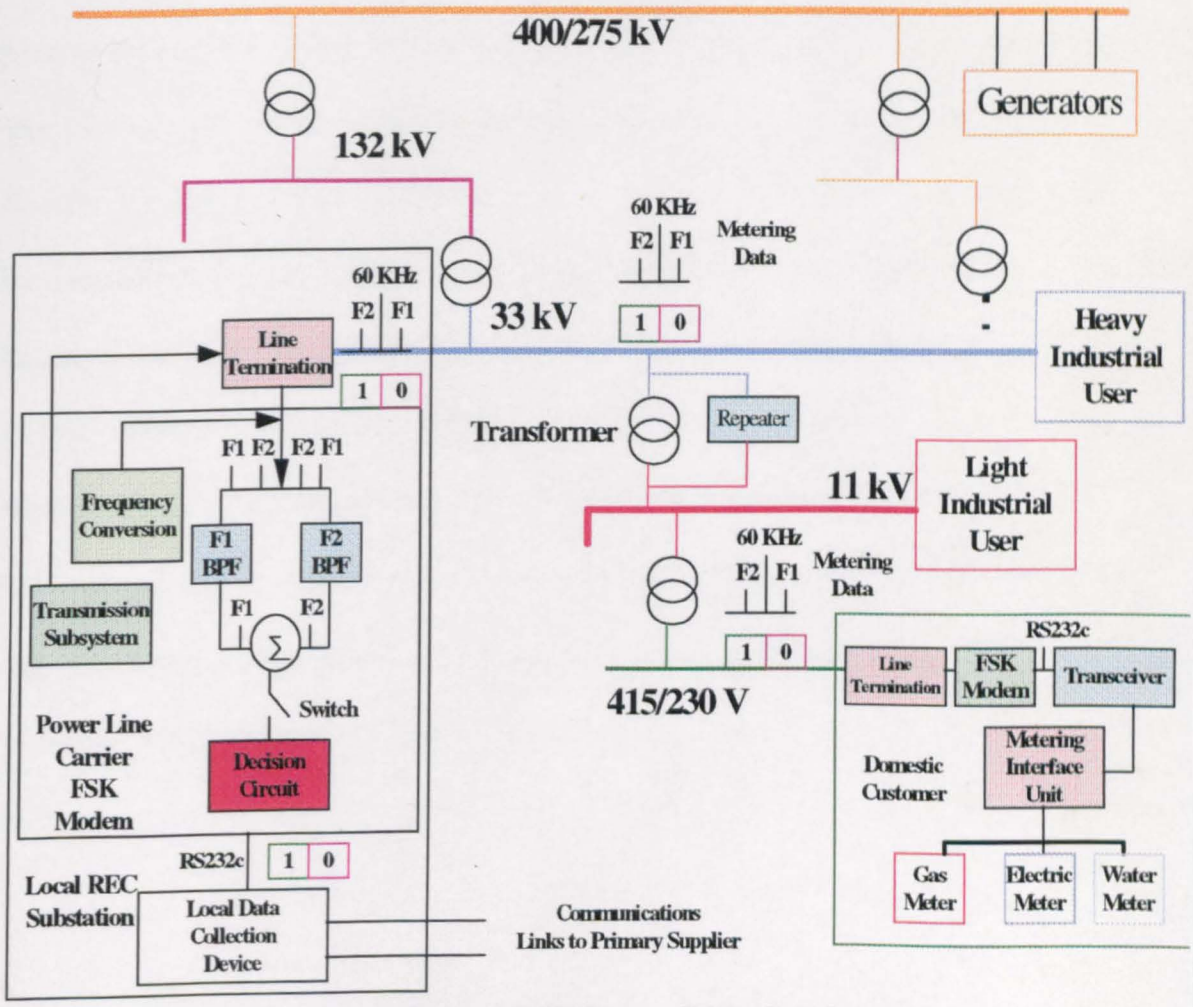

Figure 42 - Non Coherent FSK Power Line Carrier System

4.2 Operation of Power Line Carrier NCFSK System

One possible method of detecting Power Line Carrier NCFSK is detailed in Figure 42. At the receiver the two band-pass filters are followed by an envelope detector and a decision device. The frequency spacing, 2fd, must be at least 1/T (or m>=1), in order to prevent the passbands of the two filters overlapping, aliasing. A second

method could be to use a discriminator to convert the frequency variations to amplitude variations, so that amplitude-modulation envelope detection can be used instead. This second method removes the design constraint that the modulation index $m \geq 1$.

4.3 Operation of Power Line Carrier QPSK System

A possible QPSK modulator/demodulator configuration that could be used in Power Line Carrier applications is shown in Figure 43. At the transmitter a serial to parallel converter changes the incoming serial metering data into two outgoing parallel bit streams. These bit streams are at half the incoming metering data rate. The two streams are input to two separate balanced modulators, one of which is directly fed from the local oscillator, and the other by the same local oscillator but by a signal which is 90 degrees out of phase, caused by a phase shifter. Due to the balanced modulator action the signals leaving are now In-Phase and Quadrature double sideband suppressed carrier signals. Since the signals entering the modulator are producing a 0 and 180 phase change in the carrier, the change of 90° means in effect the Power Line Carrier signal changes between 90 and 270. The summation of the resultant two signals produces a QPSK signal. The coding of these phase states is a direct result of the binary data to the balanced modulators.

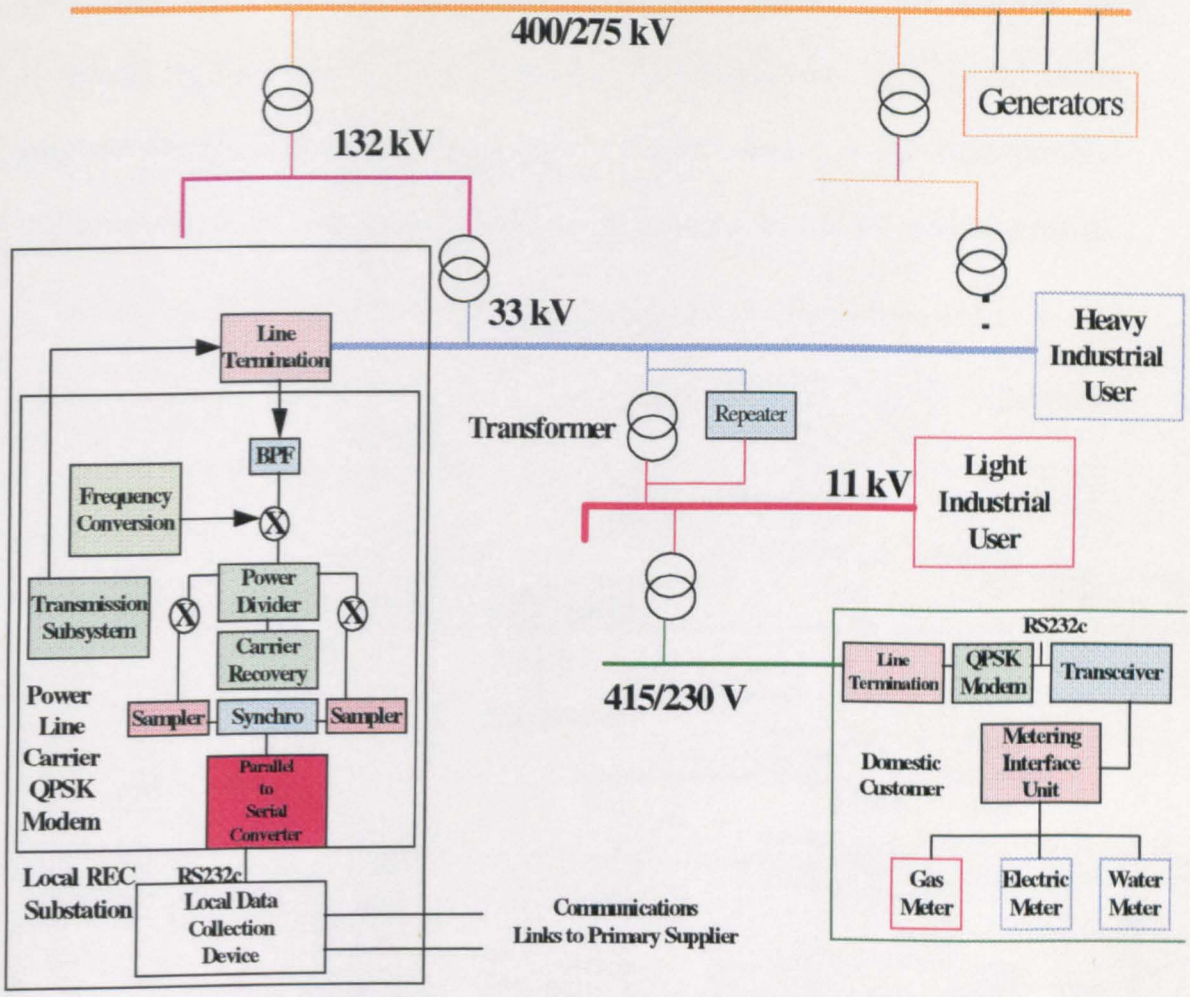

Figure 43 - Power Line Carrier QPSK System

At the receiver the main difference in circuitry, to the transmitter, is that there is requirement to produce an unmodulated carrier frequency which can be phase-locked to the incoming Power Line carrier in order that demodulation can take place. This requirement means in effect that a Power Line Carrier QPSK system is a coherent system.

4.4 Operation of Power Line Carrier Frequency Hopping System

Figure 44 shows how a typical Frequency Hopping transmitter configuration could be used in a PLC system. The Power Line Carrier frequency of operation is produced by the frequency synthesiser. This signal is controlled by the output of the code generator. Metering data is mixed with the synthesised signal to produce the modulated Power Line Carrier. If the code generator sequence driving the

synthesiser alters then the frequency to the mixer alters. At the receiver the reciprocal process takes place. The arrow highlights the logical relationship between the code generators at the transmitter and receiver which must produce the same code at the same time in order to successfully decode the incoming signal.

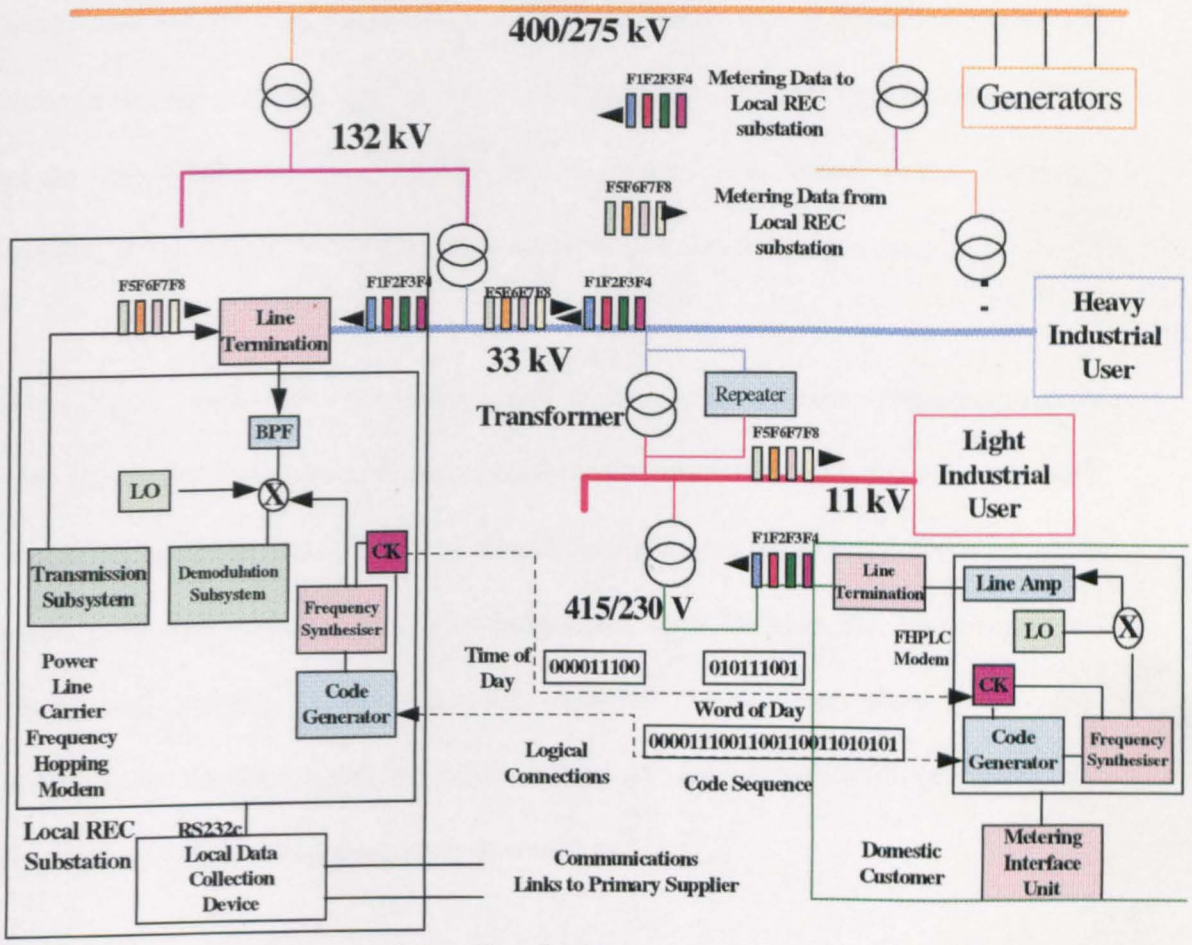

Figure 44 - Power Line Carrier Frequency Hopping System

4.5 Remote Meter Reading Using Radio

The approach, by the three main Utility providers (Gas, Water, Electricity), to the provision of a Remote Meter Reading system, has produced slight differences, in preference, for the type of communications medium to be used. Radio communication is already used by all three service providers for many purposes. Given the appropriate levels of security, and access, Radio based Remote Meter Reading systems can offer an attractive solution to all three utilities in the provision of a Remote Meter Reading facility.

4.6 Radio Remote Metering Using Split Band Working

A problem with many existing low power radio remote metering systems is that the main data transmission path is one way, normally from the meter to a Central Collection point. Dorey [36] details the latest situation regarding these Low Power Radio and Metering applications, and gives the bandwidth of operation for remote radio metering systems, defined by the Department Of Trade and Industry (DTI), to be 183.5 MHz to 184.5 MHz. Any proposed radio based remote metering system, in the United Kingdom, must work within this frequency range.

Most RECs would however prefer a full duplex, radio scheme. The advantage of two way based radio remote meter reading systems is obvious, for example tariff alteration could be carried out by broadcasting a specially coded message to all radio units and receive an acknowledgement back. Within the Department Of Trade and Industry (DTI) allocated band of frequencies, such a two way transmission facility could be implemented by split band working, where the transmit and receive frequency bands could be:

Transmit Band,
Data Collection Centre to Meter: 184 to 184.5 Mhz.

Transmit Band,
Meter to Data Collection Centre 183.5 to 184 Mhz.

Meter Receive Band :
184 to 184.5 Mhz.

DCC Receive:

183.5 to 184 Mhz.

There is perhaps an alternative method to that of the Department Of Trade and Industry (DTI) allocated bandwidth for implementing radio remote meter reading systems. This alternative method could use the existing data transmission capabilities of Cellular radio, GSM, Wireless in the Local Loop, Broadband and other commercial radio systems.

4.7 An Alternative Radio Remote Metering System Using Cellular Radio Data Services

A cellular radio system [37 and 38] comprises a network of radio cells in which each adjacent cell operates on a different Radio Frequency (RF) carrier. Cells which are not adjacent to each other may use the same carrier frequency. Each cell is prevented from interfering with another cell operating on the same frequency by limiting its power output or radiation pattern. It is normal in cellular radio systems to have a seven cell repeat configuration whereby a central cell is surrounded by six other cells with the configuration being repeated to give the necessary coverage. Each of the cells has separate transmit and receive frequencies which provide the user with full duplex communications. The duplex capability of the cellular system has enabled a fully compatible interface with the Public Switched Telephone Network (PSTN).

In the United Kingdom the cellular radio operators use the TACS system (Total Access Communications System) which is an analogue system, based on the American Advanced Mobile Phone System (AMPS). The existing United Kingdom cellular radio operators are also licensed to operate a digital cellular network known as Groupe Special Mobile (GSM) [39]. Although the traffic carried on a cellular radio network is predominantly voice, it can also be adapted to carry data whereby the mobile station is able to interface with data equipment in PSTN and also with other networks such as the Packet Switched System.

The use of Cellular Radio in a Remote Meter Reading Customer Access network, and in the provision of metering communications to remote rural areas, where other access methods may not be available offers major benefits. Cellular radio systems are flexible and equipment can be generally rapidly deployed to meet customer demand. Traditional radio access features such as voice telephony and slow speed facsimile have now been enhanced with new digital services such as ISDN access, and in due course will be further enhanced with leased line services such as X.25, ATM, Frame Relay, and digital mobile services such as GSM. The cost of transmission by radio is not distance related, and therefore can be considerably cheaper than installing copper or fibre optic cables.[40]

4.8 Remote Meter Reading Using the TACS Cellular Radio Network

The TACS network in the United Kingdom works in the frequency band 890 Mhz to 950 Mhz and channels are spaced at approximately 25 kHz. Each channel is fully duplex. The United Kingdom TACS network provides data communications capabilities. One operator uses modems specifically designed for cellular radio systems, and the other uses PSTN type modems compatible with the ITU Regulations such as V.23. The first approach uses Data Gateways which provides internetworking within a "fixed" infrastructure where the user need have no specialist knowledge of the operational environment or the equipment. The second approach does not require the use of specific equipment for data transmission and enables direct interfacing with the PSTN. A possible remote meter reading system, that could use TACS, is detailed in Figure 45.

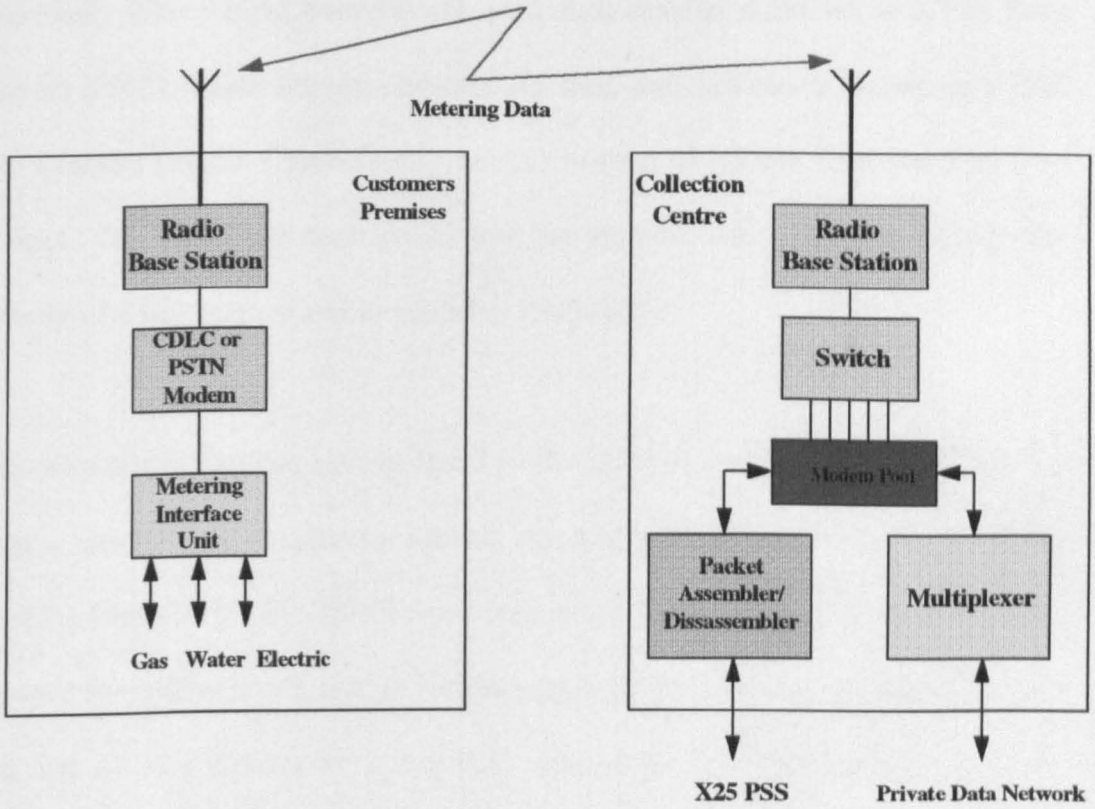

Figure 45 - TACS Radio Remote Metering System

The TACS system has provided a communications infrastructure in all but the most remote areas of the United Kingdom, and could provide a totally radio based remote meter reading system, or be used to provide a service to some rural areas where cabling infrastructures would be too expensive to install. Given the present cost of modem equipment and of TACS handsets, with judicious use of air time a cellular radio based remote meter reading system could be implemented reasonably economically.

4.9 Remote Meter Reading System Using the GSM Cellular Radio Network

The GSM network operates in the 890 MHz to 960 MHz frequency bands and has a channel spacing of 200 kHz. Using Time Division Multiple Access (TDMA) techniques either eight or sixteen traffic channels can be accommodated in this

bandwidth. Where eight channels are used each channel is known as a Full Rate Channel (FRC), where sixteen channels are used each channel is known as a Half Rate Channel (HRC). Channels may carry a mixture of speech, data and telemetry services. The HRC has been developed for services which do not require the capacity of a full channel and to conserve bandwidth.

A Remote Meter Reading system based on the GSM network could be provided by using a special data adapter to convert the multiplexed data from the Metering Interface Unit (MIU) into ISDN type rates of 3.6 Kbits/s, 6 Kbits/s or 12 Kbits/s. Forward Error Correction and bit interleaving is performed on these rates to give a data rate of 11.4 Kbits/s for a half rate channel (or 22.8 Kbits/s for a full rate channel if required). The metering data is passed from the user via a radio link to the Local Data Collection Centre where it could be interfaced into a conventional ISDN, PSTN or PSDN network. This configuration is depicted in Figure 46.

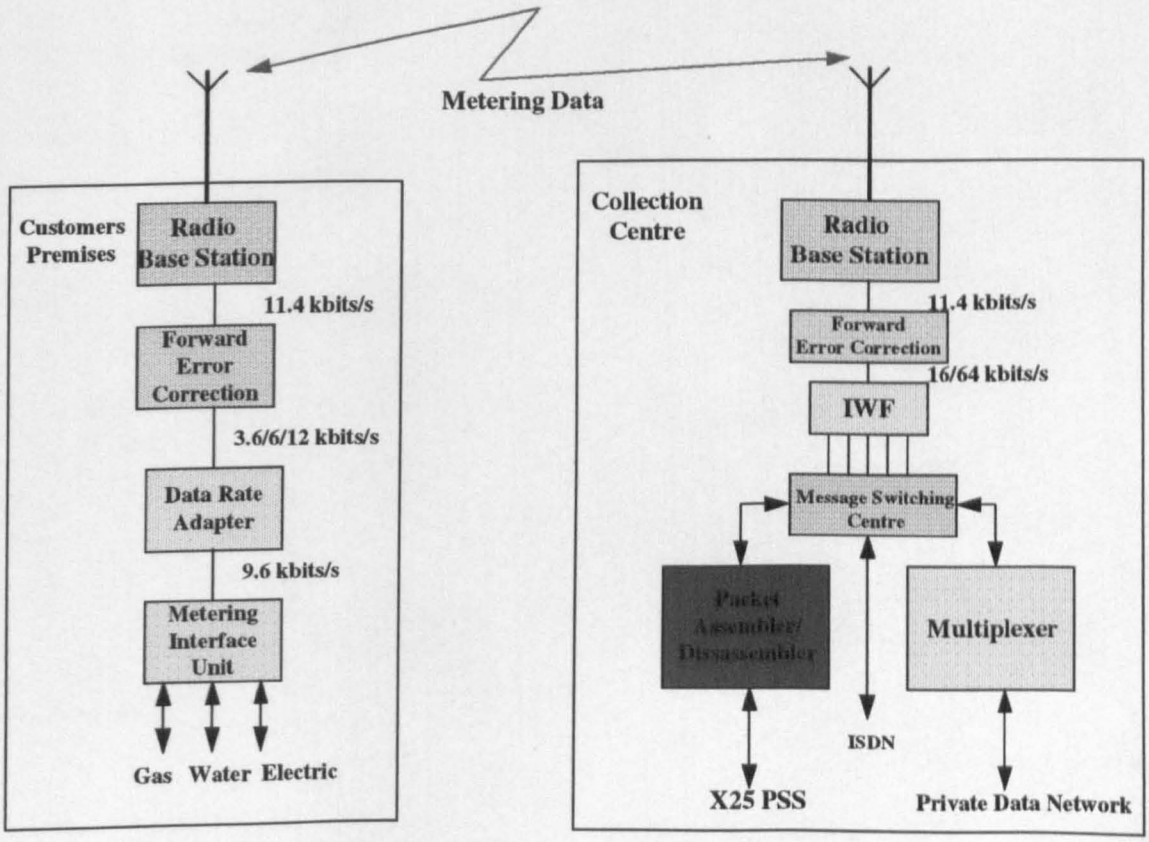

Figure 46 - Radio Remote Meter Reading Using GSM

4.10 Wireless Local Loops

At present there are a number of solutions for providing radio based remote meter reading systems. The low powered radio telemetry type system such as covered by the Tangent schemes, as discussed in section 1.6, and cellular radio schemes such as GSM and AMPS, discussed in sections 4.8 and 4.9. There are also other radio technologies like Wireless Local Loop. The difference between cellular radio systems and wireless local loop systems is quite substantial, both in terms of architectures and cost. A cellular system normally consists of fixed subscribers (fixed includes mobile users), fixed base stations connected to special cellular switching centres which are in turn connected to the normal exchanges of the PSTN. A wireless local loop system through the use of a special controller makes the base station interface appear as a standard local loop connection and therefore allows connection directly to a normal PSTN type exchange, as shown in Figure 47

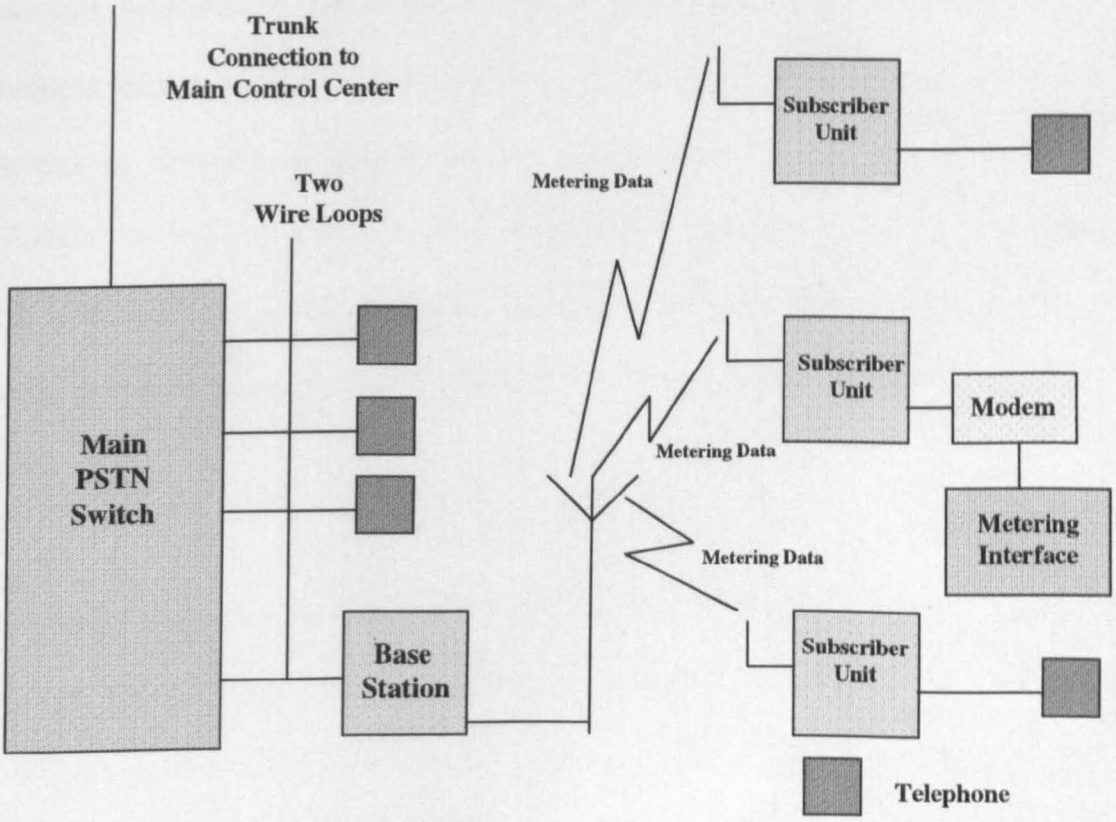

Figure 47 - Wireless Local Loop Remote Metering System

The interface between the Base Station and subscriber unit can use any of the existing cellular technologies, including GSM and AMPS. Existing wireless loop radio data systems which could be used for Remote Meter Reading systems have not experienced the growth that voice systems have. In the United Kingdom the RAM network is used based on Ericsson Mobitex technology. Although using data transmission it should be noted that these systems are still mainly based on mobile radio technology. The RAMS systems use standard radio voice channel bandwidths of 12.5 or 25 kHz spacing.

4.11 Remote Meter Reading Using Frequency Division Multiple Access (FDMA) With Dynamic Bandwidth Allocation (DBA) Enhancement

In comparison to point to point systems (PTP), point to multi-point radio systems (PMP) require a management method that can control multiple, simultaneous access, from a number of geographically dispersed terminals to one central common base station. There are a number of different methods in which this multiple access can be achieved, for example using Time Division Multiple Access as detailed in section 4.9, by Frequency Domain Multiple Access (FDMA), or by Code Division Multiple Access (CDMA). In order to cope with the possible dynamically growing demands of Remote Meter Reading, using radio, it may be that a new family of Point to Multi-point radio systems need to be used.

Frequency Division Multiple Access (FDMA) is the simplest method available to provide multiple access to a number of different radio terminals. Each terminal in a FDMA system has its own fixed frequency band allocated and the system normally works in a duplex mode with separate transmit and receive channels. Although relatively simple to operate, and offering a high degree of flexibility,

FDMA sytems are bound to fixed frequency slots which are allocated on the basis of what the maximum traffic capacity 'could be' not what it actually is most of the time, and therefore FDMA can be inefficient in spectrum terms, if lower bit rates than the maximum are used. Secondly in a FDMA system each 'communications' link requires a separate modem at the base station for every access terminal which can increase overall system costs.

New developments in modem technology [138] have overcome this disadvantage of FDMA and offer a radio system with full transparency, and variable access terminal bit rates. This new modem technology has led to the development of Frequency Division Multiple Access (FDMA) With Dynamic Bandwidth Allocation (DBA) Enhancement.

FDMA/DBA allows on-line bit error free switching of the modulation parameters such as frequency, modulation spectrum, amplitude of the modulated carrier and modulation scheme, as well as the channel coding. As this switching is done dynamically a more flexible radio access method for remote meter reading by radio can be provided.

Using FDMA/DBA a fully transparent Point to Multipoint radio based remote metering system could be provided with the same functionality as a number of corresponding individual point to point links, but without the limitations of existing time or frequency dependent multiple access schemes. The basic concept of a FDMA/DBA fully transparent Point to Multipoint radio based remote metering system is shown in Figure 48:

possible. The capacity of the system needs to be flexible in that further metering radio links can be added or removed as necessary possibly using the sectorisation technique of cellular radio or frequency reuse schemes.

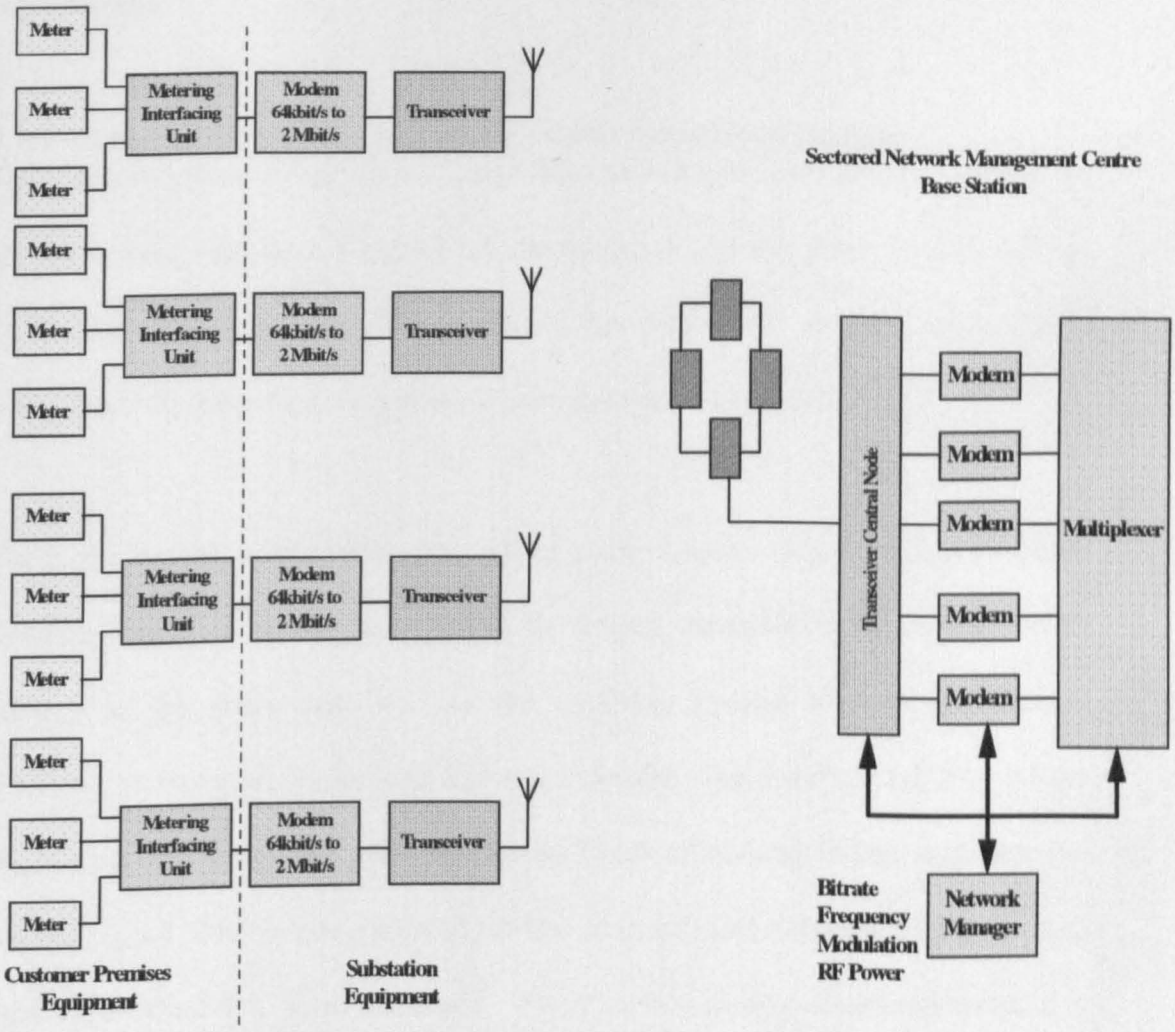

Figure 48:- FDMA/DBA Point to Multipoint Radio Based Remote Metering System

The modulation and channel coding shall be important in such a Point to Multipoint Radio Based Remote Metering System. Variable rate digital modems shall be required with advanced channel coding techniques, convolutional, Viterbi, Trellis, and Reed-Solomon to guarantee the most efficient bandwidth use and offer a good quality of service with comparable low bit error rates. Antennas

shall be required that provide both omni-directional and sectored radiation patterns. Current development trends suggest that these shall be based on microstrip technology and can be easily adapted to individual customer requirements.

4.12 Assessment of Radio Remote Meter Reading Systems

The most important advantage of Radio Remote Metering systems is the ability to provide a fast, modular roll-out of remote metering services where customers can be quickly connected. This factor, from a financial point of view alone, could make Radio Remote Metering systems very attractive to the RECs.

There are technical problems with using radio remote meter reading systems. Obstacles such as buildings, vehicles, or natural obstacles such as hills which infringe in the radio path can put the receiving system element in a "radio shadow", or cause the radio signals to be reflected. The resultant addition of the various signals, direct and reflected, could lower or causing fading such that the wanted signal level is not achieved, at the receiver, and subsequently the actual level falls below the noise threshold. Where severe fading conditions exist, if a successful signal is not received by a radio base station for a predetermined amount of time, a few seconds usually, the system control elements shall terminate the call. A radio signal arriving at a receiver may also have to overcome inherent noise, and possibly interference, at that receiver. This noise level may be due to the natural environment surrounding the receiver, or inherent noise within the receiver produced by its electronic components.

Although GSM has been suggested for radio remote meter reading, and the system is technically feasible, such a system has some limitations. GSM was conceived as

a system to provide international, and intersystem roaming, and the numbering system is quite large and cumbersome to support this, and may not lend itself readily to the simple access required by a radio remote meter reading scheme.

Apart from the possible communication link problems, which can be overcome by good network design, and the inflexibility of the GSM numbering system, cellular, wireless local loop radio systems each has potential as the communications network of a remote meter reading system. The advent of DCS 1800 (or PCN), or other already available schemes such as RAM, through third party providers, could provide a readily available, flexible, communications infrastructure for a radio remote meter reading scheme which could be more cost effective than the development of new radio remote meter reading systems using the Department Of Trade and Industry (DTI), frequency allocated bandwidth of 183.5 MHz to 184.5 MHz.

Point to Multipoint Radio Based Remote Metering Systems are based on a completely independent modem and radio function and allow an extremely flexible method for providing remote metering. Using FDMA/DBA any bandwidth up to 8 Mbit/s is available using current technology. Selective encryption on any single link is possible which has security attractions in Remote Meter Reading systems.

Table 9 summarises the frequency spectrum allocations that could be used to match the possible customer penetration in terms of distance, and possible data rates for a radio based remote meter reading system.

Customer	Customer Density	Proposed Data Rate	Frequency Band	Type of Radio Metering System	Distance of Operation
Isolated, Single Residence, Rural	very low	1200 bit/s	300 to 450MHz	Point to Point	<70km
Business -Urban Area	medium to high	1200 bit/s to 2Mbit/s	> 2 GHz	Point to Point and Point to Multipoint	<10km
Rural or Semi-Rural	low to medium	1200 bit/s to 2Mbit/s	< 4GHz	Point to Multipoint	<30km
Residential - Urban area	medium to high	1200 bit/s to 8 Mbit/s	10.15 to 10.65GHz	Point to Multipoint	<10 Km
Urban -City	high to very high	1200 bit/s to 8 Mbit/s	17 to 27GHz	Point to Multipoint	<5km

Table 9 - Radio Based Metering Systems

Chapter 5 - ISDN: An Alternative to Power Line Carrier and Radio Remote Meter Reading Systems

5.1 Remote Meter Reading Using the Telephone Network

The Public Switched Telephone Network (PSTN) in the United Kingdom has a well established nation-wide infrastructure which could offer a communications medium [4] for Remote Meter Reading systems. Telephone meter reading systems 'share' the existing line to a Customer's Premises with voice and signalling traffic, or an extra line is provided, with modems, only for metering data. For shared line telephone meter reading systems, calls are normally initiated at the Local Supply area's Data Collection Centre. The metering device in the Customer's Premises is then accessed over the telephone line, but through specialised equipment, which bypasses the normal telephone instrument.

In the United Kingdom [4] British Telecom has proposed a telephone metering system. MeterLink [4] (Note MeterLink is a BT Trademark) is a new BT service for reading utility meters over the Public Switched Telephone Network (PSTN). The MeterLink architecture is shown in Figure 49. The MeterLink system works by establishing a connection to the Customer's Premises without ringing the customer's telephone or interfering with the normal telephone service. These metering communication connections are termed 'no ring calls'. No-ring calls make the connection to a customers premises by transmitting dialling tones to line. The dialling tones, instead of activating the telephone, activate a telemetry interface unit (TIU). The TIU provides an interface between the telephone system and a meter for the transmission of metering data.

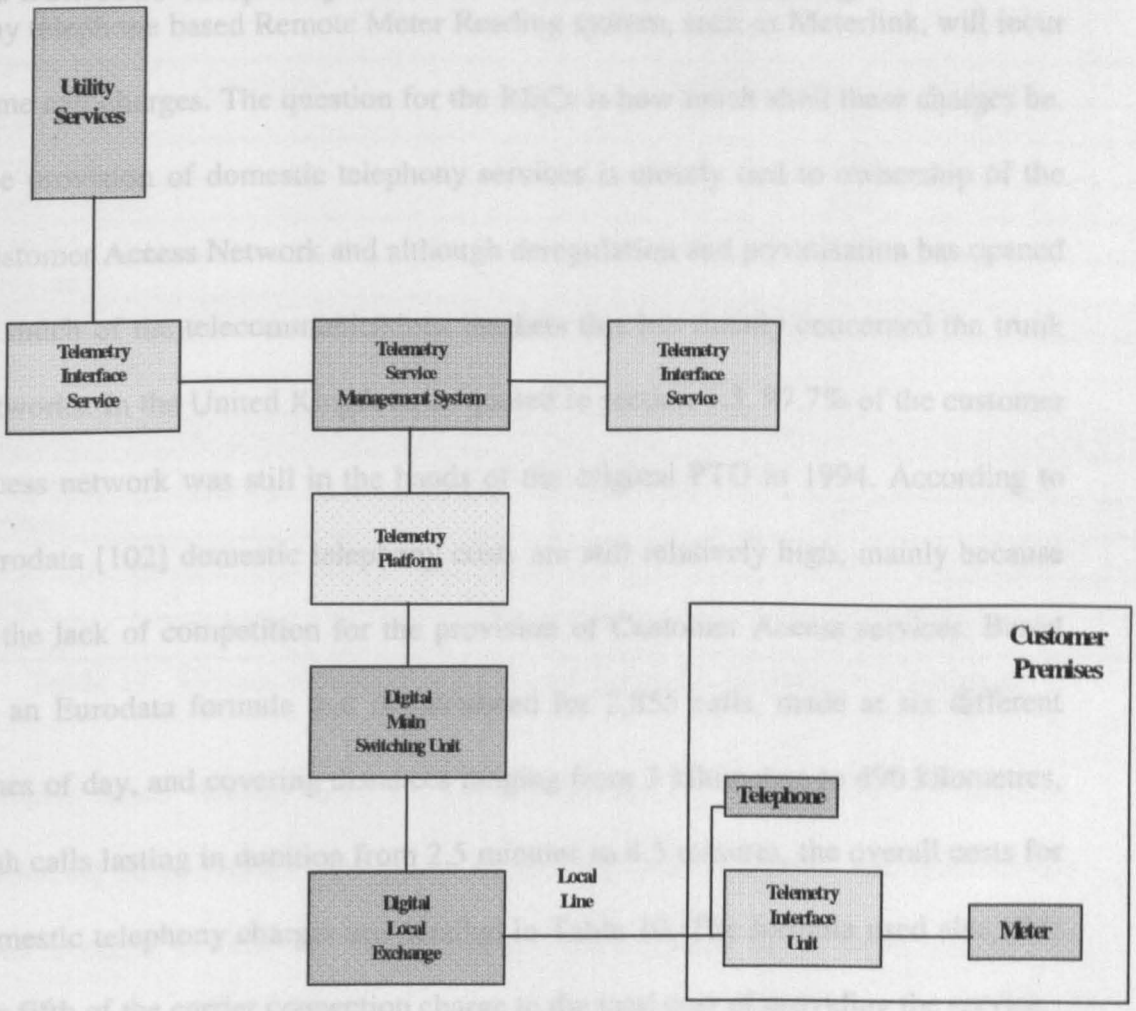

Figure 49 - MeterLink Architecture

By using MeterLink, call charges, which are one of the major drawbacks of any telephone remote meter reading system are limited. In theory lists of meters to be read will be downloaded to the telemetry platform of the MeterLink system only when required, and each meter reading session shall have a predefined time window attached to it, within which the meter reading or readings shall be completed. For example by using the MeterLink and initiating most remote meter reading calls in the early hours of the morning, the system could use the PSTN without causing any effect on normal telephone traffic.

5.2 Domestic Telephony Costs for Remote Meter Reading

Any telephone based Remote Meter Reading system, such as Meterlink, will incur some call charges. The question for the RECs is how much shall these charges be. The provision of domestic telephony services is closely tied to ownership of the Customer Access Network and although deregulation and privatisation has opened up much of the telecommunications markets this has mainly concerned the trunk networks. In the United Kingdom, as quoted in section 1.3, 97.7% of the customer access network was still in the hands of the original PTO in 1994. According to Eurodata [102] domestic telephony costs are still relatively high, mainly because of the lack of competition for the provision of Customer Access services. Based on an Eurodata formula that is calculated for 2,855 calls, made at six different times of day, and covering distances ranging from 3 kilometres to 490 kilometres, with calls lasting in duration from 2.5 minutes to 4.5 minutes, the overall costs for domestic telephony charges are detailed in Table 10. The formula used also adds one fifth of the carrier connection charge to the total cost of providing the service.

It is possible to use the information, in Table 10, to estimate the annual cost of a telephone remote meter reading system, such as MeterLink, based on an assumed access time of 20 seconds. If instead of making six normal calls to 2855 customers we make one remote meter reading call to 17,130 customers, and if each call lasts 2.5 to 4.5 minutes as stated then the additional cost, per 17,130 customers, to a REC would be 603,720 pounds, per annum, using BT, or 526,320 pounds, using Mercury. With a potential market of 23 million customers in the United Kingdom the total annual bill for such a telephone based remote meter reading system would be in the order of 810 million pounds using BT or 706 million pounds using Mercury.

Country	Total Cost (Fixed +Usage)
Norway	295
Denmark	299
Netherlands	320
Sweden	357
Belgium	453
UK/Mercury	**526**
United States	533
France	552
UK/BT	**603**
Germany	637
Ireland	871
Italy	903
Spain	914
Portugal	1195

Table 10 - Domestic Telephony Annual Costs (in thousands of pounds)

Remote meter reading calls are unlikely to last 4.5 minutes or 2.5 minutes. Assuming an an average domestic telephone call lasts 3 minutes, and reducing the total amounts, in Table 10 correspondingly, for a typical remote meter reading call of 20 seconds duration, still gives average bills of approximately 90 million pounds using BT or 78.4 million pounds using Mercury. If the 12 Regional Electricity Companies each had an equal share of the 23 million customers then annual bills for a telephone remote meter reading service would be approximately 7.5 million pounds using BT, or 6.5 million pounds using Mercury. These costs are for the telephone charges alone and do not include the provision or cost of any equipment. The figures are also based on the assumption that only one try is needed to access the metering device, more tries would incur greater call charges.

5.3 Remote Meter Reading Using an X25 Packet Data Network

Remote metering data could also be transmitted over the PTO owned Packet Data Network. Eurodata shows [102], the costs of an X.25 service from the PTOs, based on annual fixed rental, and usage costs, for a 9.6 Kbits/s circuit referenced to 1,373 local and trunk calls per day, as detailed in Table 11. Assuming each

remote meter reading could be carried out at 50 bits/s, the data rate used in the Melko system of section 1.7, then the number of such circuits which can be multiplexed onto one 9.6 Kbits/s X.25 circuit is 192. Taking into account that the annual figures above are based on 1,373 such 9.6 Kbits/s local and trunk calls, then these amounts can be related to the cost of providing a remote meter reading service to 192 x 1,373 = 299,616 customers annually. The total annual cost of providing an X.25 based remote meter reading system to a potential market of 23 million users is:

23,000,000/299,616 x 8,677,000 = 666 million pounds using BT,

23,000,000/299,616 x 9,076,000 = 696 million pounds using Mercury,

Again assuming these costs are equally shared amongst the 12 Regional Electricity Companies it would still leave annual bills, for each of the companies, in the region of 55.5 million pounds and 58 million pounds, using BT or Mercury respectively, for an X.25 based remote meter reading system. It could be argued in both cases, telephone and X.25, that faster access rates would minimise charges. But faster access rates generally mean more expensive equipment and line costs. For example increasing the remote meter reading data rate to 2400 bits/s would cut access time to 1/48th that of a 50 bits/s system, but the number of 2400 bits/s circuits that could be carried on a 9600 bits/s bearer would only be 4, and so the number of such 9600 bits/s circuits that would be required for an X.25 Remote Meter Reading Packet Data Network would increase from the original number by a factor of 48.

Country	Total Cost (Fixed +Usage) in pounds
Norway	5,224
Denmark	5,412
Netherlands	7,484
Sweden	3,868
Belgium	5,177
UK/Mercury	**9,076**
United States	Not Provided
France	5,067
UK/BT	**8,677**
Germany	5,835
Ireland	5,236
Italy	6,410
Spain	12,565
Portugal	7,876

Table 11 - Domestic X.25 Annual Costs (in Thousands of pounds)

5.4 An Alternative Telephone Based Remote Meter Reading System

The Integrated Services Digital Network (ISDN) has seen little use by the average Customer, even in telephony applications, because whilst most Public Telephone Operators have spent large amounts of capital on installing digital lines, switches and other equipment, in their transmission networks, little effort has been applied to providing such digital technology in the Customer Access (Local Loop) Network. Primarily the reason for not upgrading the local loop has been the cost of providing the necessary digital technology at a reasonable price. The reason for the high costs of such updating is that the majority of local loops in use in telephone systems are 2 wire, and in order to provide an Integrated Services Digital Network local loop, the connection between the user's terminal equipment and the local exchange should ideally be 4-wire. Since the existing 2-wire infrastructure to every customer would have to be replaced this means that because of the cost impact the digital services that can initially be offered to most ISDN users shall use the existing 2 wire local loop.

5.5 The Integrated Services Digital Network (ISDN)

The standard for the Integrated Services Digital Network (ISDN) was first proposed by the CCITT (now the ITU) in 1981. ISDN has as its primary goal the integration of voice and non voice services, including video communications, using digital techniques. The basic ISDN architecture is shown in Figure 50 and the main ITU recommendations in Table 12. The principal concept of ISDN is to provide a single interface where all the needs of the user can be handled via a "data highway". This highway is a "pipe" between the user and the service provider through which data flows. The origin of the data, whether from a telephone (digital) or a remote metering device is theoretically irrelevant to an ISDN. The data highway as defined in CCITT ISDN recommendations supports a number of independent input tributaries by time division multiplexing. The relevant ISDN interface specifications are shown in Table 13.

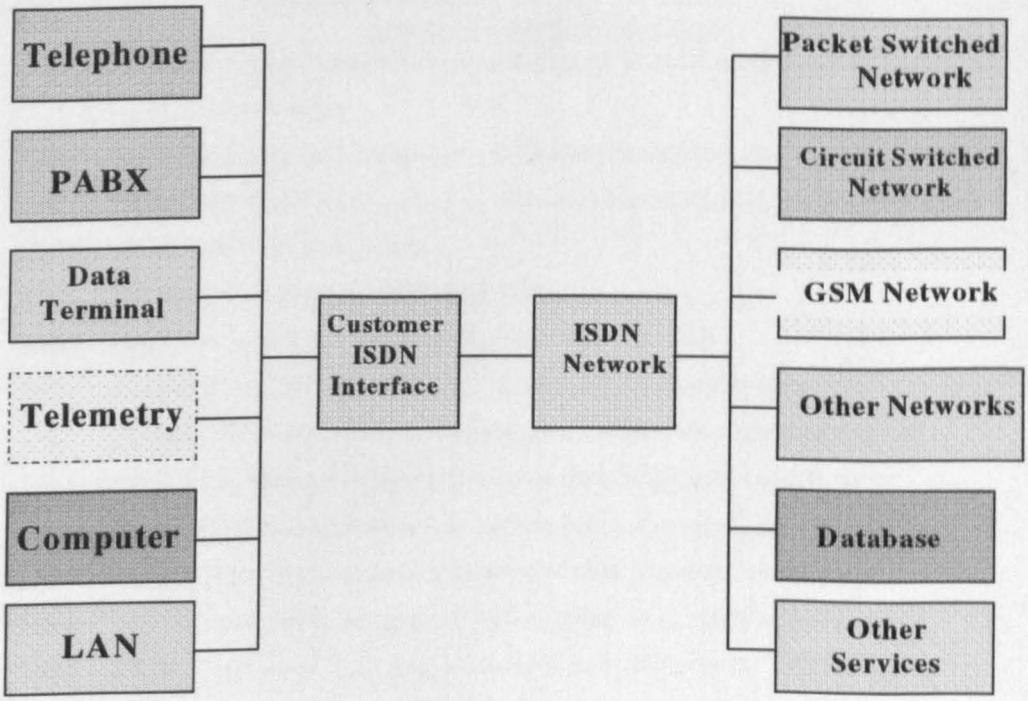

Figure 50 - Basic ISDN Architecture

	General
I.110	General structure of the I-Series Recommendations
I.111	Relationship with other Recommendations relevant to ISDNs
I.112	Vocabulary of terms for ISDNs
I.120	Integrated Services Digital Networks (ISDNs)
I.130	Attributes for characterisation of telecommunications services supported by an ISDN
	Service Capabilities
I.210	Principles of Telecommunications Services Supported by an ISDN
I.211	Bearer Services Supported by an ISDN
I.212	Tele-Services Supported by an ISDN
	Overall Network Aspects and Functions
I.310	Principles of Telecommunications Services Supported by and ISDN
I.320	Bearer Services Supported by an ISDN
I.330	Tele-Services Supported by an ISDN
I.331	(E.164) The numbering plan for the ISDN era
I.340	ISDN Connection Types

Table 12 - Main ISDN Recommendations

	User-Network Interfaces
I.410	General Aspects and principles relating to Recommendations on ISDN user -network interfaces
I.411	ISDN user-network interfaces - reference configurations
I.412	ISDN user-network interfaces - channel structures and access capabilities
I.420	Basic user-network interface
I.421	Primary rate user-network interface
I.430	Basic user-network interface-Layer 1 specification
I.431	Primary rate user-network interface-Layer 1 specification
I.440	(Q.920) ISDN user-network interface data link layer-general aspects
I.441	(Q.921) ISDN user-network interface data link layer specification
I.450	(Q.930) ISDN user-network interface layer 3 general aspects
I.451	(Q.931) ISDN user-network interface layer 3 specifications
I.460	Multiplexing, rate adaptation and support of existing interfaces
I.461	(X.30) Support of X.21 and X.21 bis based DTEs by an ISDN
I.462	(X.31) Support of Packet Mode Terminal equipment by an ISDN
I.463	(V.110) Support of DTE's with V-series type interfaces by an ISDN
I.464	Rate adaptation, multiplexing and support of existing interfaces for restricted 64kbit/s transfer capabilities

Table 13 - ISDN Interface Specifications

5.6 The ISDN Reference Configuration

The CCITT produced reference configurations for the interface points to an ISDN network, which are shown in Figure 51.

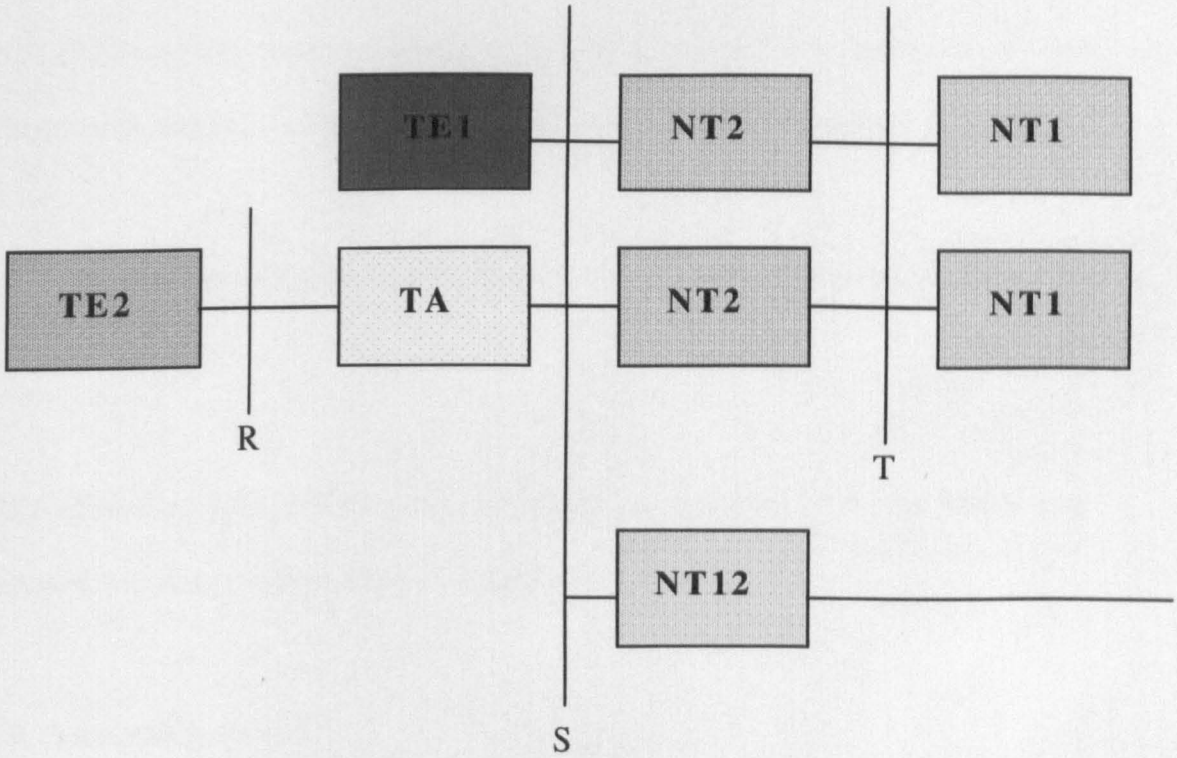

Figure 51 - ISDN Reference Configuration

The reference configurations are conceptual configurations which can be used to identify methods of connecting to the ISDN. Two concepts are used for describing these ISDN configurations. The first concept combines similiar functions which may be required in ISDN arrangements into common groups. The specific functions in a common group may be performed by one or more pieces of equipment. The second concept is one of reference points which are given alphabetic letters (R,S,T). These are the conceptual points of the network at the conjunction of two functional groups. The reference points may correspond to a physical interface between pieces of equipment or there may not be a corresponding interface.

Each box in the reference configuration represents a specific functional grouping.

LT (Line Termination)

NT1 (Network Termination 1) includes functions associated with the physical and electrical termination of the network as defined in the OSI 7 layer model Level 1.

NT2 (Network Termination 2) includes intelligent functions equivalent to the OSI layers 1, 2 and 3.

TE1 (Terminal Equipment 1) An interface that complies with the ISDN user network interface recommendations shown in Table 13.

TA (Terminal Adapter)

TE2 (Terminal Equipment 2) An interface (CCITT V or X series) that requires a Terminal Adapter to be compatible with the ISDN user-network interface recommendation, for example a data terminal with a V24/V28 (RS-232-C) interface.

One method of interfacing a metering device to the ISDN, for the purposes of Remote Meter Reading, could be implemented via a TE2 equipment. For such interfacing to take place the metering device needs a standard interface such asV24/V28, RS232c, or other, detailed in the CCITT V or X series recommendations.

5.7 Basic and Primary Rate ISDN User Interfaces

Two principal interface standards have been defined for user-network interfaces in an ISDN. The first standard, known as the Basic Rate Interface (BRI), operates at a nominal bit rate of 144 kbit/s. This interface supports two "B"channels, each operating at 64 kbit/s, and one "D" channel operating at 16 Kbit/s. The "B" channels are used for data transmission and the "D" channel is used for signalling and low rate data telemetry. The second interface is the "primary rate" interface which operates at 1984 kbit/s. At 1984 kbit/s the interface supports 30 "B" channels and one "D" channel. All channels operate at 64 Kbit/s.

5.7.1 Basic Rate ISDN Channel Structure

The D channel in the BRI serves two purposes. First it carries signalling information which is used to control circuit switched calls, of the associated traffic carrying B channels, at the ISDN interface. Secondly the D channel can be used for carrying traffic in a packet switching or low speed telemetry mode when no signalling information associated with the B channels is required, for example when no traffic is presented to the ISDN. Table 14 provides a summary of the typical data "types" which could be supported by the B and D channels. Since either the B or D channels of the BRI can be used to transport data it is possible that with the correct meter interface that this could also include data for Remote Meter Reading. Figure 52 shows the frame structure for a BRI. Each frame consists of 48 bits, 16 bits from each B channel, 4 from the D channel with the other bits used for control and signalling purposes. The controlling and signal bits are:

F = Framing bit

L = DC load balancing

E = Echo of previous D bit (for contention resolution)

D = D channel (4 bits x 4000 frames/sec = 16 Kbit/s)

A = Activation bit

S = Spare bit

The BRI frame is 48 bits long, sent over a period of 250 microseconds, giving a useful data rate of 144 Kbit/s for data (36 bits) but occupying a total bandwidth of 192 Kbit/s including overheads. The D channel is further subdivided into three logical subchannels;

s = subchannel for signalling (setting up a call)

t = subchannel for telemetry

p = subchannel for low bandwidth packet data

B-Channel	D-Channel
Telephone	**Alarm Systems**
Interactive Information	**Utility Metering**
Services	**Energy Management**
Electronic Mail	

Table 14 - ISDN B and D Channels

F	L	B 1	L	D	L	F A	L	B 2	L	D	L	B 1	L	D	L	B 2	L	D	L

a) BRI ISDN Frame Structure Transmitted from Users Terminal to network

F	L	B 1	E	D	A	F A	N	B 2	E	D	S	B 1	E	D	S	B 2	E	D	L

b) BRI ISDN Frame Structure Transmitted from Network to Users Terminal

Figure 52 - Basic Rate ISDN Channel Structure

5.8 ISDN Connections

There are three types of end to end connection provided by an ISDN system:

a. Circuit Switched Calls over the B channel.

b. Packet Switched Calls over the B channel.

c. Packet Switched Calls over the D channel.

Any one of these types of connection, with an ISDN BRI terminal installed in the Customers Premises, could provide Remote Meter Reading Communications.

5.9 Using the ISDN B Channel Circuit Switched Connection to Provide Remote Meter Reading Communications

Figure 53 shows the systems architecture of a possible Circuit Switched Remote Meter Reading system which could be interfaced with an ISDN. The three individual data outputs from the gas, electricity and water meters are multiplexed by a Metering Interface Unit (MIU), as proposed in section 1.4.6. The MIU would be colocated on a Customer's Premises with the metering device. The purposes of using the MIU, in addition to combining the three meter outputs, as suggested in section 1.4.6, is that it reduces and controls circuit contention, minimises telephone line usage and therefore line charges, and it cuts equipment costs by providing one common external interface to the ISDN Network Termination Unit rather than one interface for each individual Utility's service.

The secondary purpose of the MIU is to provide a common output to a customers metering display. This display would be used by the customer to view measurement information associated with parameters such as tariff, usage, and cost of utility service to date. An internal power supply with battery back-up, control logic, and an internal Multiplexer, are also shown in the proposed design.

The MIU shall multiplex the metering data from the individual Utility company's meters into a single data stream suitable for interfacing to the ISDN Network Termination Unit and in the reverse direction shall demultiplex data from ISDN Network Termination Unit and route it to the relevant meter.

The MIU has become an ISDN TE2 in this example and theoretically the Terminal Adapter shown in Figure 53 could also have been functionally incorporated within the MIU.

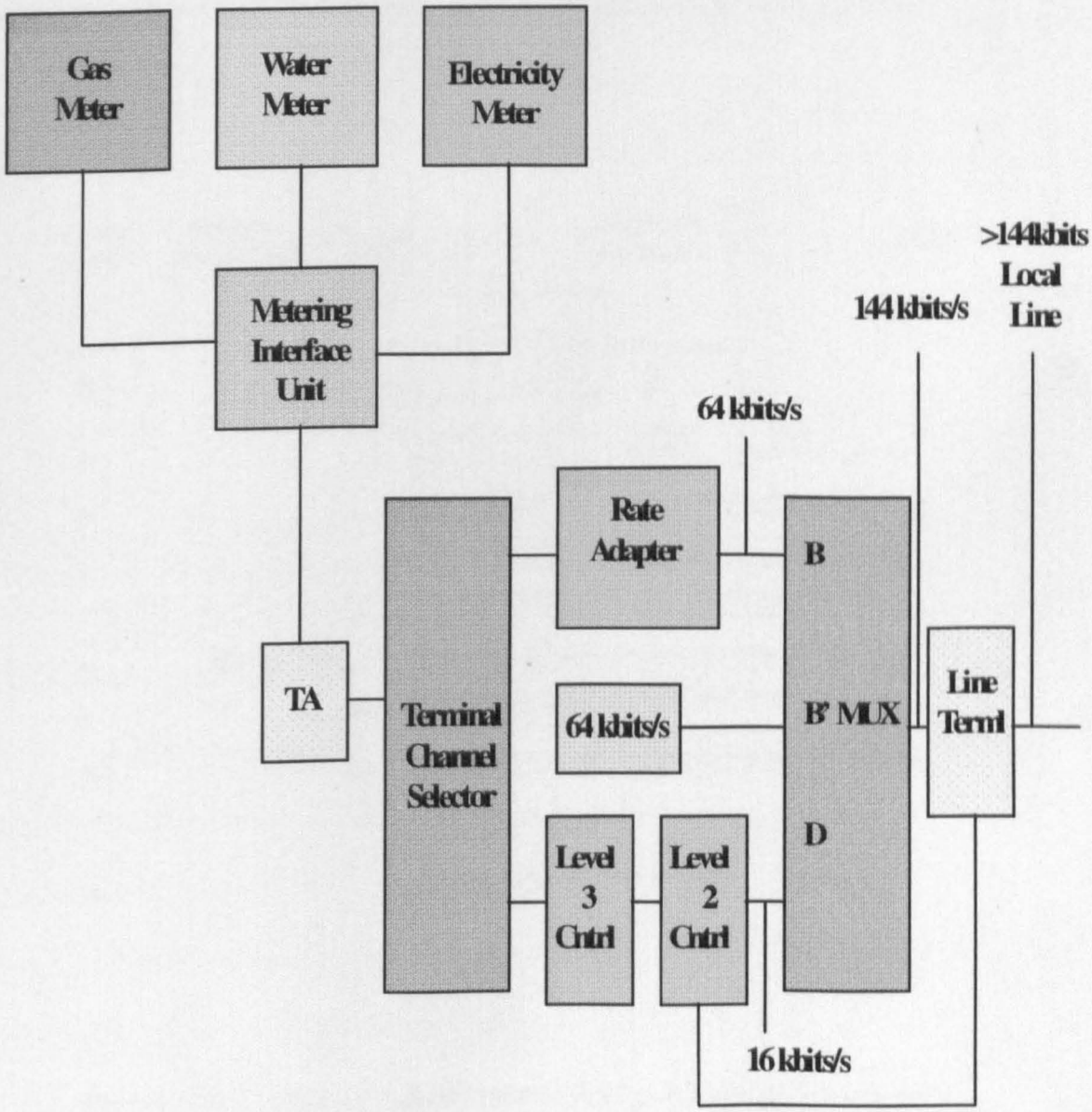

Figure 53 - Circuit Switched Remote Metering Reading Using an ISDN

The call set up and possible operation of a Remote Meter Reading System using a circuit switched ISDN is shown in Figure 54. The DCC set ups the communication path to the MIU, via the telephone network, using the D channel. A BRI B 64 kBits/s channel is used to transmit and receive metering data between a Data Collection Centre (DCC) and the Metering Interface Unit, also via the telephone network. The DCC and the MIU may use any protocols they wish for end-to-end communication once the call is set up. The D channel is used to exchange control information between the MIU, or the DCC, and the telephone network for call establishment, termination, and access to network facilities.

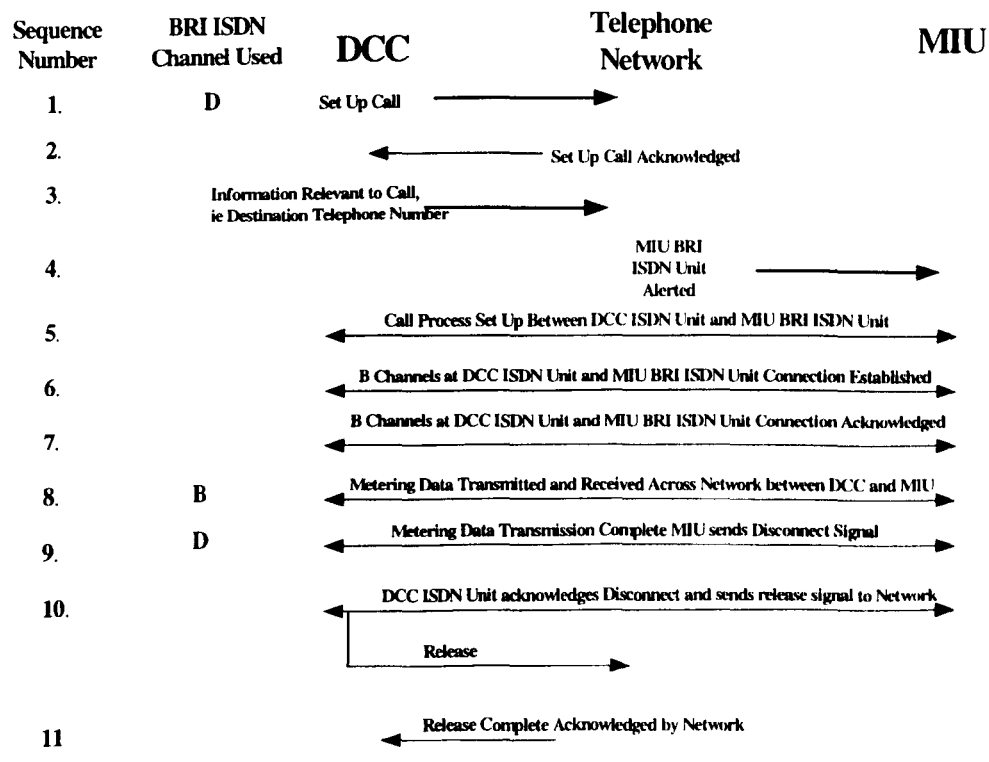

Figure 54 - Circuit Switched Remote Meter Reading Call Set-up

Figure 55 depicts a communications architecture that could be used to implement the circuit switched remote metering system, via the ISDN, shown in Figure 54.

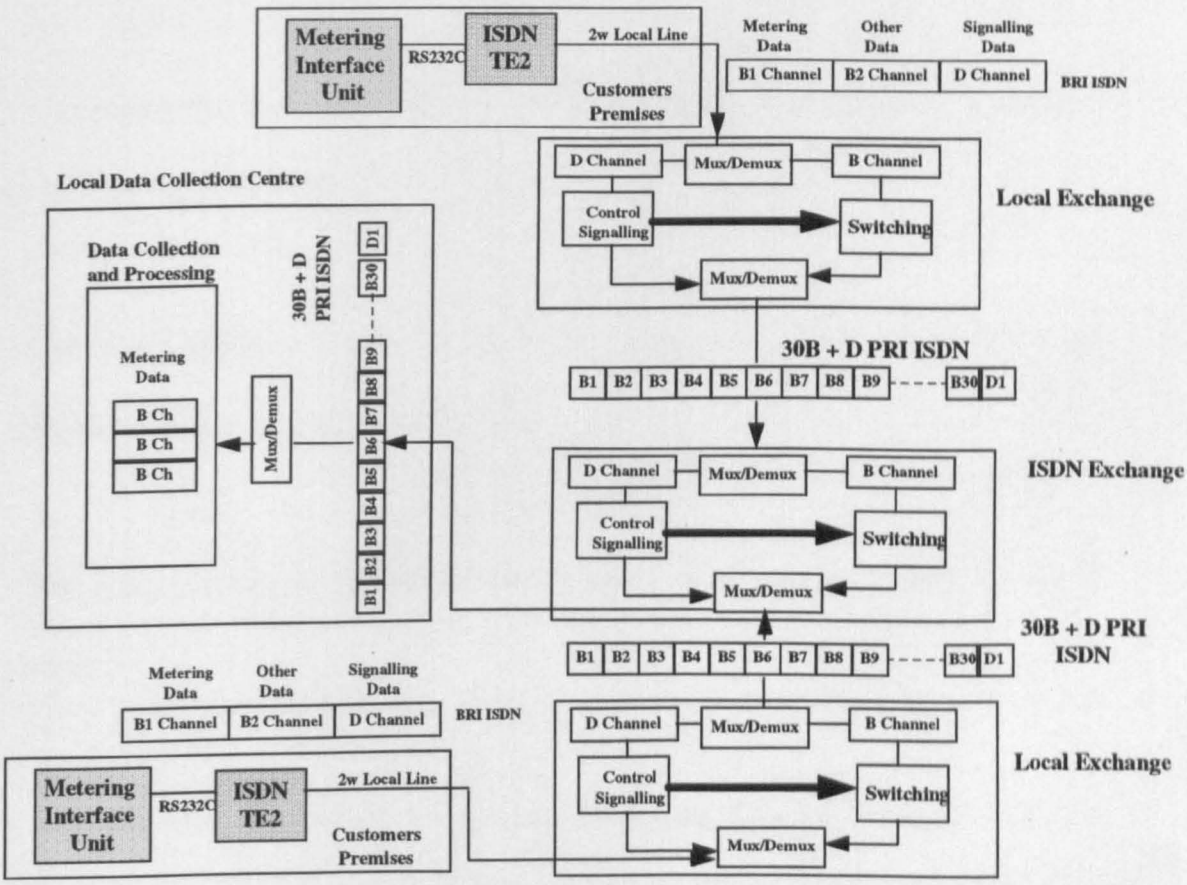

Figure 55 - Communications Architecture for an ISDN Remote Metering System

5.10 Using the ISDN B Channel as a Packet Switched Connection to Provide a Remote Meter Reading System Communications Network

An Integrated Services Digital Network could also provide a 64 Kbit/s semi-permanent switched B-channel connection between the Metering Interface Unit and a packet handling function within the ISDN network. Semi-permanent switched access allows the circuit to be established for longer periods of time than a normal telephone call, 2.5 to 4.5 minutes [102]. Semi-permanent ISDN switched access could be more cost effective to the Regional Electricity Companies than permanent access via such systems as X.25 packet data networks which were discussed in section 5.3. The sequence of events for transmitting and receiving metering data in a semi-permanent ISDN switched access could be:

•DCC requests, via the D channel a circuit switched connection to a packet switched node

•The connection is set up using Signalling System No.7 and the DCC is notified of this via the D channel

•The DCC sets up a virtual circuit to the Metering Interface Unit via the call establishment procedure on the B channel

•The DCC terminates the virtual circuit using X.25 call procedures on the B channel.

•After the MIU has passed the necessary metering data on the B channel, the DCC signals, via the D channel, to terminate the circuit switched connection to the packet switched node.

•The connection is terminated via Signalling System No.7

5.11 Using the ISDN D Channel as a Packet Switched Connection to Provide a Remote Meter Reading Communications Network

All traffic over the ISDN D channel uses a Link Access Protocol - D channel (LAP -D). At the network layer, X.25 is used for packet switching [18], and a protocol, defined in CCITT Recommendation I.451, is used for control signalling. The data link layer on the D channel, the channel where LAP-D is used, has to deal with two levels of multiplexing. For example, at an end users location there may be more than one metering device, as shown in Figure 53, sharing the same physical Metering Interface Unit, or each utility meter may have its own Metering

Interface Unit, or the meters could be directly connected to one ISDN Network Termination Unit. There will also be two different types of traffic consisting of either packet-switched data or control signalling.

LAP-D accommodates these different levels of multiplexing by using a two part address which consists of a Terminal Endpoint Identifier (TEI) and a Service Access Point Identifier (SAPI). Normally each utilities individual meter can be given a unique TEI. In the case where individual Meter Interfacing Units are provided, for each utility's meter, or the case where the meters are connected directly to an ISDN Network Termination Unit it is possible for more than one TEI to be assigned. Figure 56 details the possible network configuration for such a remote meter reading system, using the ISDN D channel, with the services provided by the LAP-D layer being extended to access the meters of all three Utility Companies.

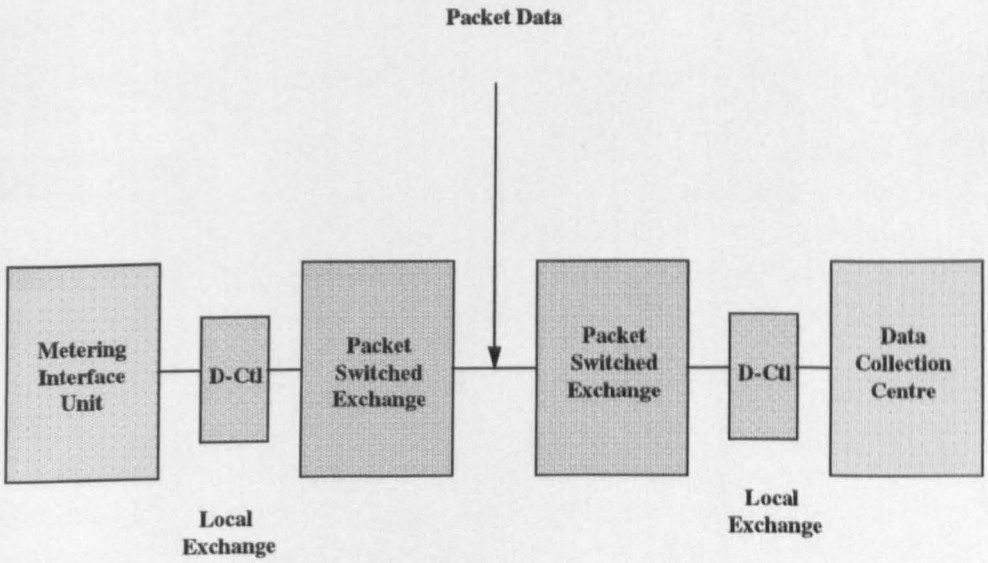

Figure 56 - Network Configuration and Protocols for a Remote Meter Reading System Using the ISDN D Channel

5.12 Conclusions

It has been proposed [4 and 5] that telephone networks, including the use of Integrated Services Digital Networks, offer many benefits to Remote Meter Reading Systems. The main disadvantages of using telephone based Remote Meter Reading systems are the current cost of tariffs. A cost effective ISDN service in particular is still not available in many areas of the United Kingdom and Europe. Table 15 [96] shows the number and types of ISDN of lines that are presently deployed, and forecast to be deployed, to ordinary households in Europe (in terms of 1000s of lines). The significance of the figures, detailed in Table 15, is how few ISDN circuits, only 154,000 Basic Rate Interfaces, will be available in the United Kingdom in 1997, one year before full deregulation of the Electricity Supply Industry takes place. The number of BRI interfaces shall rise to 979,000 in the year 2000. The already available, and forecast, amount of ISDN lines, for the years 1997 and 2000, could not provide a communications network for the potential customer base of a United Kingdom Remote Meter Reading System, 23 million, as discussed in section 1.1.6.

Country	**Service**		**January 1997**		**January 2000**
Belgium	BRI		35		167
	PRI		6		12
Denmark	BRI		60		195
	PRI		3		7
France	BRI		248		1,705
	PRI		18		66
Germany	BRI		332		2,318
	PRI		21		83
Italy	BRI		136		1,209
	PRI		17		36
Holland	BRI		70		347
	PRI		5		12
United Kingdom	**BRI**		**154**		**979**
	PRI		**32**		**88**

Table 15 - ISDN Line Deployment Forecasts

BRI= Basic Rate and PRI=Primary rate

The cost of installing a Basic Rate ISDN infrastructure in each Customers premises could also be prohibitively expensive to a utility company, where large numbers of Customers could be involved. Table 16 [96] shows the cost of a BRI is expensive both in terms of equipment, and monthly line rental costs. ISDN line rental cost, in the United Kingdom, is approximately £400 per annum, and reviewing the volume of Remote Metering Data likely to be transmitted or received from a customers premises, a rate of 1200 bits/s is suggested in section 3.12, would seem to prohibit the use of an Integrated Services Digital Network BRI whilst lower capacity, and possibly more cost effective methods, such as radio and Power Line Carrier (PLC) exist. It is not unfeasible that the Integrated Services Digital Network PRI could be used to interconnect Local Data Collection Centres, with volumes of metering data of at least 2.048 Mbits/s, to the Local REC/Second Tier Agent or Primary Supplier but as Table 16 shows this service could also be prohibitively expensive.

Country	**BRI**		**PRI**	
	Installation	**Monthly Cost**	**Installation**	**Monthly Cost**
Belgium	5.69	45.71	68.36	548
Denmark	1.64	16.80	11.53	117
France	3.08	35.42	32.00	369
Germany	2.47	29.57	17.29	207
Netherlands	3.29	30.14	32.95	301
United Kingdom	**2.47**	**33.11**	**26.35**	**352.5**

Table 16 - ISDN Installation and Monthly Costs in pounds

ISDN has been the topic of much discussion in the telecommunications world. The Public Telephone Operators have introduced ISDN equipment and systems whilst publicising ISDN as a revolutionary telecommunications concept. There is one major problem with this concept, the users need to be rich enough to afford it.

The Basic Rate ISDN equipment that has been introduced by the PTOs is costly because the installed and potential customer base, as Tables 15 and 16 show, is very low, and resulting high tariffs shall continue to deter potential users like the RECs. Chapter 6 shows how the impact of the new technologies, and in particular the use of Asynchronous Transfer Mode (ATM) in conjunction with the Broadband ISDN Synchronous Digital Hierarchy Transport Networks of the new licensed Public and Private Telephone Network Operators, could be more technically and cost effective, to the Regional Electricity Companies, as a communications network, which could be involved in the transmission of Remote Metering Reading data.

Chapter 6 - Development of an Architecture for Remote Communications Systems

6.1 The Classic Remote Meter Reading Communications Network Architecture

In general the Remote Meter Reading systems architectures detailed in references [2,4,5,7,8,10,20,21,22,56,57,59,60,70,79,94], and discussed in Chapters 3, 4 and 5, could be described as "classical" in that they usually work on the premise of a Power Line Carrier/Radio/Telephone Line Customer Access Network system being used to carry metering data to a local collection point, usually a substation or transformer site, then using the PSTN, radio or other telecommunications Transport Network system to carry the data to a central collection point, usually the local Regional Electricity Company.

Of the two elements the Customer Access Network is the most cost sensitive [99,111] and is one of the main reasons why Power Line Carrier using the Low Voltage Distribution Network has been suggested. The development of an effective transport network [41,103,104,112,121] for Remote Meter Reading systems does not face the same technical or cost restrictions as the Customer Access Network.

6.2 Remote Meter Reading Data Transport Network

The advent of a 'true' second tier supply system where metering information may need to be provided to the prime supplier, Local REC/Second Tier Agent and the NGC or Pooling Settlement Administrator requires the provision of a National Communications Network.

The Public Telephone and Private Network Operators who could provide such a network are now finding themselves compelled to deploy broadband communication technologies. This deployment has resulted from the need to provide services for imaging, video, digital voice and collaborative computing communications. The new broadband network technologies could upgrade the efficiency of existing metering communication networks by removing bandwidth limitations, in the transport network. These broadband network technologies could also provide increased reliability, resilience to failure, and network management. Commercially, the cost margins [96,102] involved in the provision of such services, with the advent of deregulation and consequent increase in competition, coupled with the availability of the new technology [41,91,103,121] has driven cost margins of transmission circuit capacity downwards as shown in Figure 57 [91].

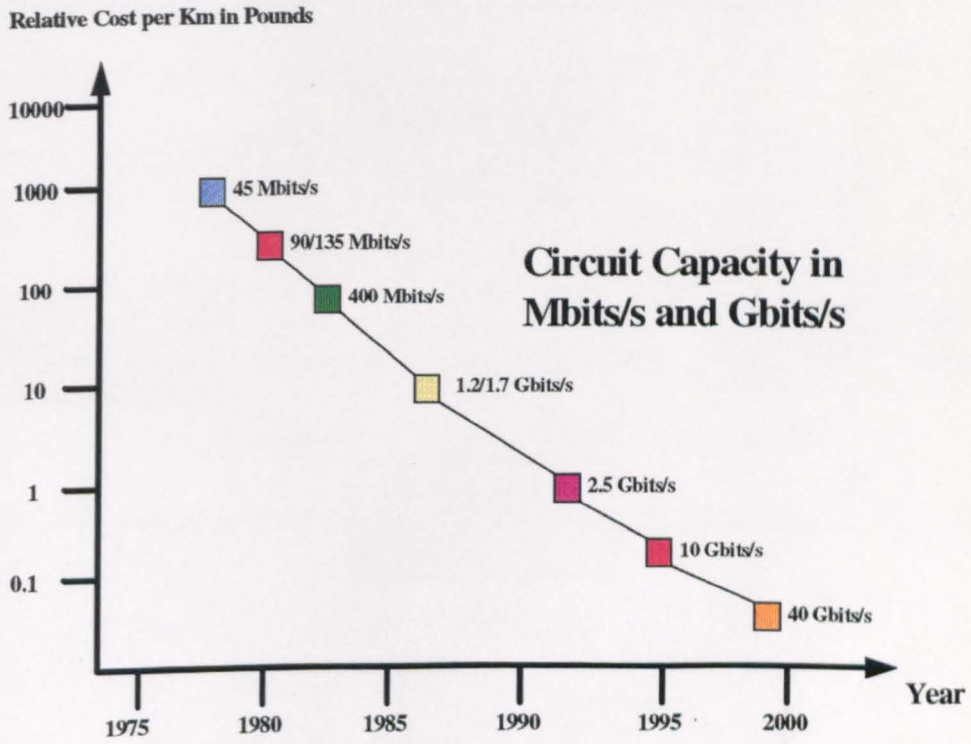

Figure 57 - Relative Cost Per Mbit/s x Distance (km) of Transmission Capacity

In Section 1.1.7 it was proposed that to take full advantage of the opportunities arising in the Electricity Supply Industry and other utility supply areas an Integrated Remote Metering Communication and Information Systems infrastructure must be in place.

It is suggested that for a National Communications Network for Remote Meter Reading it would be of economic and technical advantage to the RECs to employ the Broadband Communication Networks of the Public Telephone and Private Network Operators. These Broadband Communication Networks would lay the foundations, as shown in Figure 58, for the provision of an Integrated Remote Metering Communication and Information Systems infrastructure providing Value Added Services, telephony, video and security monitoring, which could reduce the cost of implementing a communication network for Remote Metering.

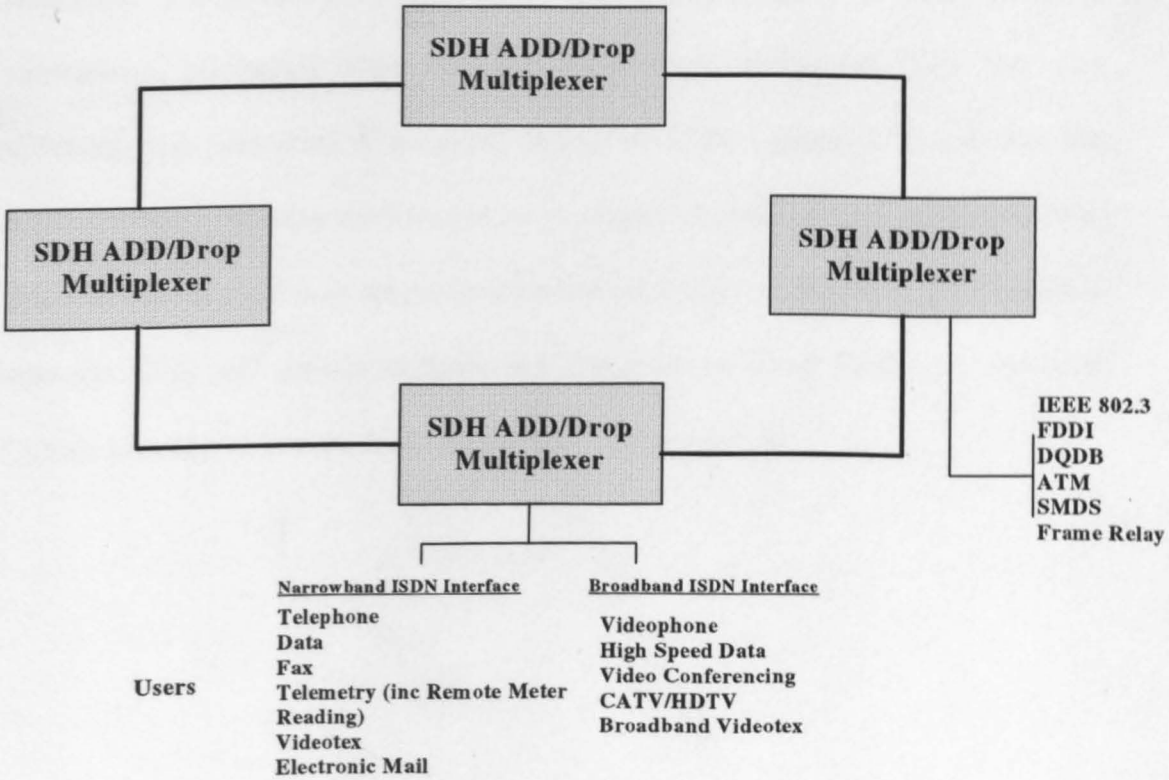

Figure 58 - Typical B-ISDN Network Services

The impact of using Asynchronous Transfer Mode (ATM) [103] in conjunction with these broadband networks, its perceived efficiency [122] and real cost to the RECs is a significant factor for considering its use for networking across the potentially wide service areas of a National Communications Network. Its cost effectiveness to the RECs will be based on the reasoning that the use of private ATM networks shall not be dependent on carrier tariff rates or by restrictions in quality of service.

A full Broadband-Integrated Services Digital Network based on Asynchronous Transfer Mode has been available in the United Kingdom and other European countries, as shown in Table 17 [102 and 121], since 1996. In England and Wales the Regional Electricity Boards have themselves combined under the Energis banner as a licensed PTO, and Broadband Synchronous Digital Hierarchy (SDH) Add/Drop Multiplexer [41] equipments are already installed in many electrical substations, co-located with electrical distribution equipment. The fact that universal standardisation is a central feature of SDH equipment means that the RECs have theoretically the freedom to purchase communications equipment from different manufacturers or suppliers with the confidence it shall interface to such a network. This will greatly enhance the attraction of using SDH as a National Communications Network for Remote Meter Reading data.

Provider	Availability	Coverage	Bandwidth
Kingston Communications	1995	Hull Region	2, 34 and 140 Mbits/s
Deutsche Telecom	1996	Nationwide	2, 34 and 140 Mbits/s /s
Vebacom Germany	1996	Nationwide	2, 34 and 140 Mbits/s
BT	1994	Trial Service in Manchester and London	2 Mbits/s per delivery
Colt Telecom Ltd	1992 1994	London, Frankfurt	300 bits/s to 155 Mbits/s
Energis Ltd	1994	UK Nation-wide	2, 34 and 140 Mbits/s
France Telecom	1996	Nation-wide	2, 34 and 140 Mbits/s
Telecom Italia	1995	Nationwide	2, 34 and 140 Mbits/s
Telecom Finland	1995	Nationwide	2, 34 and 140 Mbits/s
TeleDanmark	1995	Nationwide	2, 34 and 140 Mbits/s
Belgacom	1997	Nationwide	2, 34 and 140 Mbits/s
MFS Datanet	1992	London, Paris, Frankfurt/Swd	2, 34 and 140 Mbits/s

Table 17 - The Development of SDH Networks in the United Kingdom and Europe

6.3 An ATM Residential Network Model for a Metering Communications System

Asynchronous Transfer Mode (ATM) provides real time switching of information from telephone, video, computer sources and many of the new emerging multimedia applications.

ATM supports a variety of transmission speeds because it is not associated with a single communications medium or framing method. It allocates the total bandwidth of the communication to such services as metering data, video, or voice transportation by transmitting fixed length cells whenever such a service requires bandwidth.

The ATM forum [104,112] has established a subnetworking group to specify standard interfaces for an ATM To The Home (ATTH) architecture for different residential access networks. A basic objective of this group is too provide a communication network between service providers and home devices. Home devices could be Personal Computers, set-top boxes, or other intelligent devices including Meter/Metering Interface Units. An important feature of this group is to specify how to use an ATM in the Home architecture to provide connectivity from domestic premises to other services including Internet, and any existing Public ATM networks.

Since telephony services (POTS) remain the main residential communications application, access to the PSTN is also provided in the universal model. Access to corporate and private networks also has been recognised as important for telecommuting, and the functional model proposed by the ATM Forum, for providing residential Broadband services (including narrowband applications) has been designed to include these networks. The universal functional model divides the network into three parts: private, public and service provider networks. The private network provides connectivity within the home, whilst the public network is further divided into two parts, the Customer Access Network (termed the Residential Access Network in the model), and the Service Distribution Network (SDN). Both of these subnetworks should belong to the PTO or other operator. The third network, Service Provider Network (SPN), belongs to the individual service provider. The SPN is responsible for connecting the various servers of the service provider to the Service Distribution Network.

6.3.1 Customer/Residential Access Network (CAN/RAN)

Since this is the most expensive element of any network and Remote Metering provides only relatively slow data rates with relatively small bandwidths, and for

reasons already stated, in section 3.27, a Frequency Hopping Power Line Carrier System is proposed to provide this element of the network. By adopting an ATM/SDH transport network however the transition to other CAN technologies, from Power Line Carrier, such as ATTH could provide alternative routing or future Customer Communications.

6.3.2 Service Distribution Network(SDN)

The use by the PTOs of synchronous equipment [41], such as a single synchronous multiplexer, means that a REC also has flexibility at the CAN/SDN interface point with a Synchronous Digital Hierarchy (SDH) network to increase the transmission capacity for metering data as customer demand rises or falls relatively simply, and route any necessary information to a Local REC/Second Tier Agent, Primary Supplier or Pooling Settlement Administrator if needed. This ability of SDH networks can lead to significant cost reductions in amounts of equipment used, spares, maintenance and other ergonomic considerations. The efficiency of the methods used by SDH systems together with enhanced management facilities will lead to more flexibility in the provision of high or low capacity data circuits for Remote Meter Reading and the type of problems that occurred when the 100 kW customers were deregulated, as explained in section 1.2, could be avoided or minimised.

Figure 59 suggests an ATM Residential Network Architecture for the RECs which is adapted for Remote Meter Reading using Power Line Carrier as the Customer/ Residential Access Network element. The model also provides the interface structure necessary for the provision of the Value Added Services suggested in section 6.2.

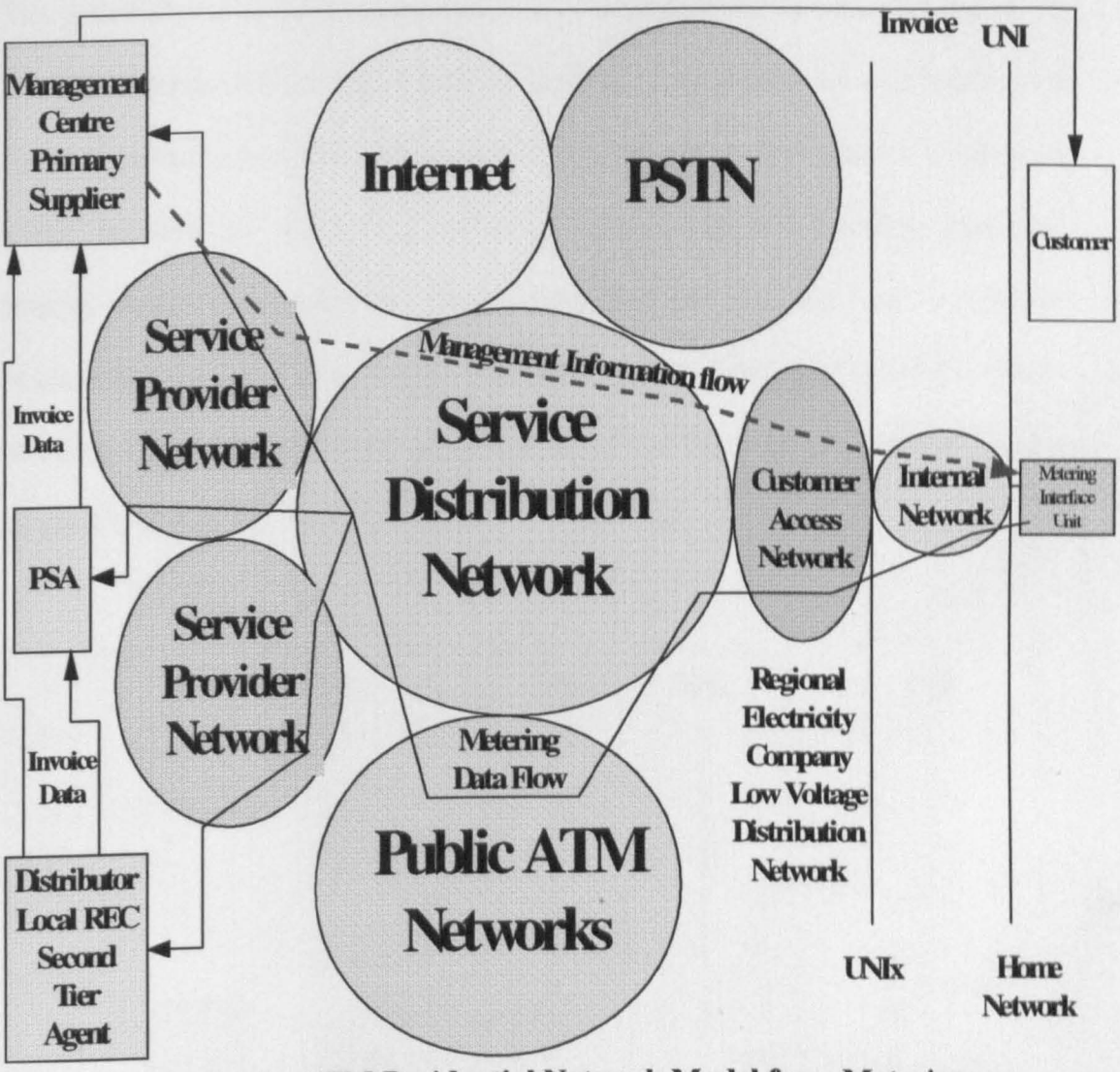

Figure 59 - An ATM Residential Network Model for a Metering Communications System

Power Line Carrier has been suggested as the Customer Access Network of a Remote Meter Reading system but in certain instances and in order to provide Value Added Services a more flexible approach needs to be taken by the RECs and other telecommunications services providers. A hybrid solution of three communication technologies, radio, fibre, or copper cable including Power Line Carrier may be the best answer. Of the three technologies it is more than likely that the one offering the best alternative to Power Line Carrier is the radio based solutions shown in sections 4.7 to 4.11.

The possibility of such Customer Access communications technologies has to be accounted for in any Integrated Remote Metering Communication and Information Systems infrastructure providing Value Added Services and a balance needs to be struck between the availability of Power Line Carrier and possible alternative routing mechanisms such as radio based systems. To this end a Flexible Architecture is proposed for the Remote Meter Reading Customer Access Network and the Residential Architecture Model of Figure 59, is amended to that detailed in Figure 60:

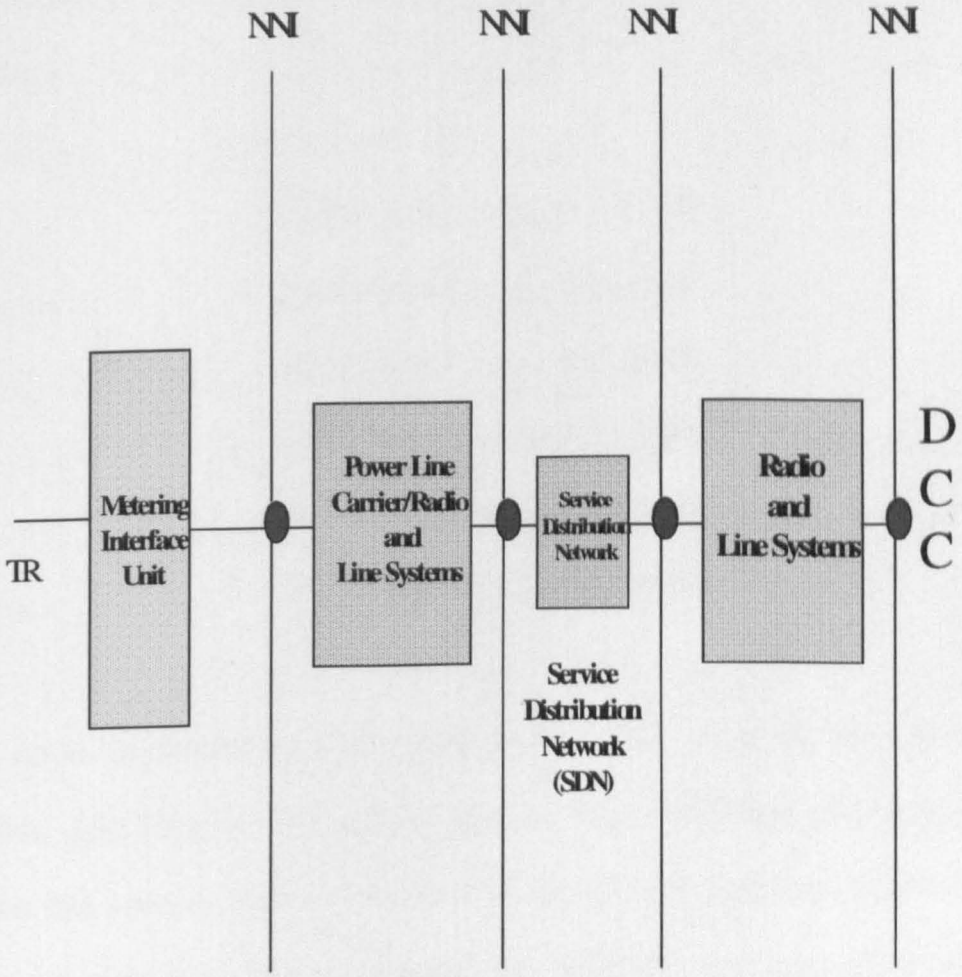

Figure 60 - Remote Meter Reading System Flexible Access

6.4 Development of an ATM Network for Providing Remote Meter Reading and Value Added Services

Broadband Integrated Services Digital Networks, like the Synchronous Digital Hierarchy, cannot effectively communicate the proposed Value Added Services, such as digital voice, data, and compressed image on their own.

ATM does what Broadband Integrated Services Digital Networks cannot do, switches telephone, video and computer data in real time, and provides the appropriate Quality of Service (QoS). ATM allocates the total bandwidth to these services by transmitting fixed length cells whenever a service is required. The information is packaged into 53 byte cells and can be sent at the following user speeds:

1.544 Mbits/s as per ITU G.804

2.048 Mbits/s as per ITU G.804

6.312 Mbits/s as per ITU G.804

34.368 Mbits/s as per ITU G.804

44.736 Mbits/s as per ITU G.804

139.264 Mbits/s as per ITU G.804

The ATM Interconection to the SDH Network can be at 34 Mbits/s or 155 Mbits/s. The 53 byte ATM cell is shown in Figure 61. Each cell has a 5 byte header that contains Virtual Circuit and Virtual Path Indentifiers (VCI/VPI). The header is transmitted first and contains the addressing information but does not carry any service specific information. The remaining 48 bytes could carry metering or Value Added Service data. The other information in the cell header is:

Generic Flow Control(GFC) - GFC is 8 bits long and is used to control the flow of data traffic across the User Network Interface(UNI). The GFC exists only on the user's interface to the ATM network, between adjoining nodes on an ATM network this field is used for network addressing and is known as a Network Node Interface(NNI).

Payload Type(PT) - The next three bits of the ATM header form the Payload Type. The PT determines the nature of the information in the payload, whether it is control and supervisory information, or raw data.

Cell Loss Priority(CLP) - CLP is a single bit within the ATM header and is used to tell the network, when it is set to 1, to discard the cell, if necessary.

Header Error Control(HEC) - The HEC serves as the error detector for data within the header itself. The HEC has no relation whatsoever with the Payload data. ATM is basically a connection orientated networking device since no data is transmitted without a circuit being first established. The connections can be set up on demand or pre -configured as required. Traffic on an ATM network is passed through the network using Virtual Circuits and Virtual Paths. The concept of Virtual Circuits (VC) and Paths is important because it is what differentiates an ATM system using SDH from conventional Time Division Multiplex systems.

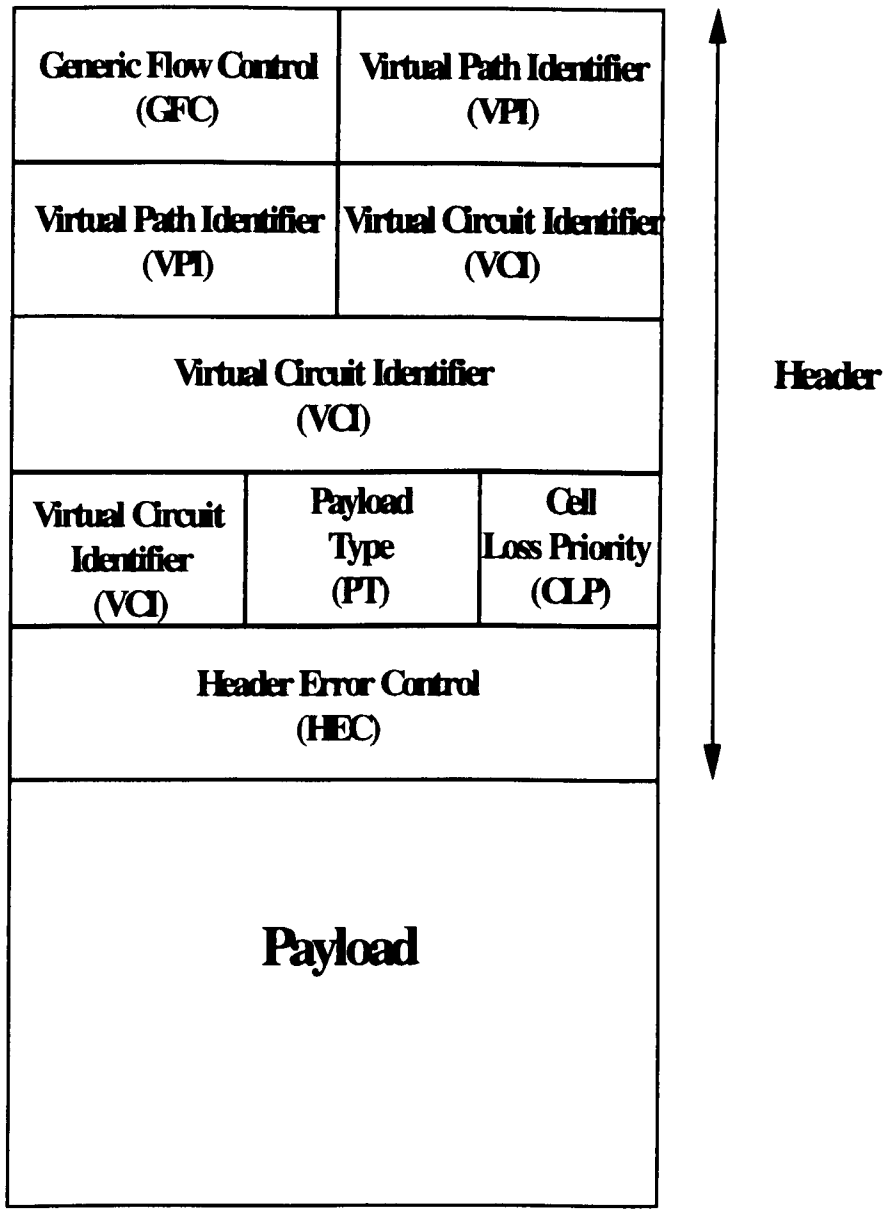

Figure 61 - ATM Cell

ATM has a layered structure and its relationship to the B-ISDN structure is shown in Figure 62.

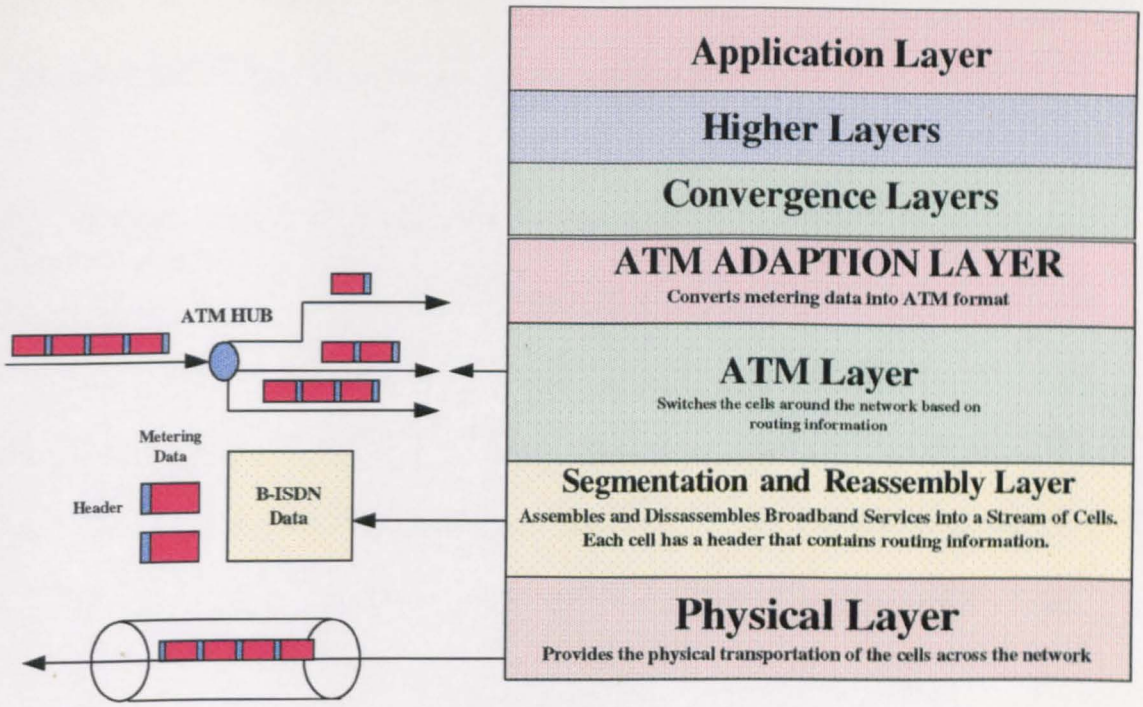

Figure 62 - ATM and B-ISDN Protocol Stacks

A central issue for any communications system which is used to carry metering data is one of efficiency. The ability of an ATM cell to carry the complete header of a higher layer data packet within one cell information field will enhance its attraction for the transportation of metering and Value Added Services data. The ATM header carries sufficient information to route a cell containing metering data across a network from different Local Data Collection points together with cells containing Value Added Services data on the same bearer. On the bearer the cell stream is continuous. At an ATM switch the cell header would be used to address a look-up table to determine where the metering or Value Added Service data is to be routed. The contents of the look-up table could be pre-set by the National Communications Network operator. Since ATM switching is carried out in hardware very high throughputs of the order of 10s to 100s of Gigabytes could be

achieved. This efficiency will reduce overall meter access time and minimise the cost of using a National Communications Network.

6.5 Asynchronous Transfer Mode Utilising the Synchronous Digital Hierarchy (SDH)

ATM is not a stand-alone transport communications service. It requires an associated frame technology which can encapsulate its cells. The Synchronous Digital Hierarchy can serve as the Transport Network for ATM [41,103]. At this point all major carriers in the United Kingdom and Europe are planning to deploy, if they have not already deployed, ATM networks as shown in Table 18 [91, 102].

The standards bodies originally defined SDH for the transmission medium of B-ISDN services, with ATM serving as the layer-2 protocol on the OSI stack, but ATM has almost overtaken the use of B-ISDN and many of the carriers in Table 18 are already using ATM networks to handle different types of traffic. ATM equipment prices are falling as more networks come on line, and given the bandwidth available for those prices the service already compares favourably to the telephone, X.25, Basic and Primary Rate ISDN figures provided in Tables 10, 11, 15 and 16. Table 19 [91] details some typical ATM equipment costs. Tariffing structures for ATM services are discussed in section 6.6.

Providers	Country
Belgacom, Telnet Vlanderen, Wallon Titan	Belgium
TeleDanmark	Denmark
Telecom Finland	Finland
France Telecom	France
Deutsche Telecom, Vebacom, Cummunications Network International	Germany
Telecom Italia	Italy
Telenor	Norway
Telenordia	Sweden
Swiss Telecom	Switzerland
BT, Kingston Communications, Cambridge Cablemedia, Ascom Timeplex, Bell Cablemedia, Nynex, MFS Communications	United Kingdom

Table 18 - Development of ATM Networks in the United Kingdom and Europe

Manufacturer	Switch Cost per User Port or Total Cost (1.5, 2, 6, 34, 44, 140 Mbits/s) Normally maximum of 15 ports per switch	Network Interface
Advanced Telecommunications Modules Ltd Virata Switch	240 per port	Up to 155 Mbits/s
Cisco Systems Lightstream 1010	716 per port 11398 per switch	Up to 622 Mbits/s
Nortel Magellan orPassport Switches	24,000 to 60,000 per switch depending on configuration	Up to 622 Mbits/s
Network Systems Corporation Enterprise Routing Switch	20,000 to 50,000 per switch depending on configuration	Up to 622 Mbits/s

Table 19 - Typical ATM Equipment Costs (in pounds)

By using the same format for all transmissions on a National Communications Network, ATM can adapt to changing traffic load requirements such as when customers are brought or taken of line. ATM should be seen by the RECs as a possible means of allocating metering or Value Added Services bandwidth on an "as and when required" basis thus enabling a more efficient use of transmission.

Since ATM is a new standard, which forms part of the Broadband ISDN strategy, its architecture is similar to that of the OSI Seven Layer Model. The ATM Adaption layer, shown in Figure 62, could be used to convert metering data into the ATM format. In a Remote Meter Reading system, for example where Power Line Carrier is used for the communication between a Customer and a Local Data Collection Centre, it would be possible to convert metering data from an IEEE 802.3 format into an ATM format, and transmit the resultant data directly over an SDH network to a main data collection point. This method of adaption could be

used in an Integrated Remote Metering Communication and Information Systems to combine cells containing metering and cells containing other Value Added Services data into one communications stream. An ATM Hub/switch could be used at the Local Data Collection point, the Local REC/Second Tier Agent and Primary Supplier to encode and decode metering data from its original format into the ATM compatible format.

To perform this encoding decoding five(5) specific adaption choices are provided, each applicable to a specific level of service. The most applicable of these choices, to a remote metering system, is the ATM Adaption Layer 5, which is called the Simple and Efficient Adaption Layer(SEAL). SEAL is used to provide a virtual circuit across a network. All 48 bytes within the payload would be packed with metering data thus maximising the efficiency of any data transmission.

The ATM Layer within a B-ISDN structured stack allows for communication between nodes on an network. It is not designed to have access to any applications as this is a function of the ATM Adaption layer. It is at the ATM Layer level that the 53 byte ATM cells containing metering data could be switched, and forwarded as necessary, across a National Communications Network, to the prime supplier, Local REC/Second Tier Agent or the Pooling Settlement Administrator. Chapter 7 investigates in more detail the formatting and routing of ATM cell data for Remote Meter Reading.

6.5.1 Quality of Service

Connecting to a National Communications Network using ATM puts the onus on both the RECs and the Service Provider to come to an agreement regarding the support of metering data bandwidth and traffic applications. A Virtual Circuit, or circuits, on an ATM system could be set up as a metering data communication

channel between two associated ATM hubs, or switches, one located in a Local Collection Centre and the other in the prime supplier, Local REC/Second Tier Agent and the Pooling Settlement Administrators locations. These Virtual Circuits will be guaranteed by the National Communications Network provider as having a specific Quality of Service, and a REC will be billed accordingly for this service. The National Communication Network Operator will guarantee a Quality of Service (QoS) that specifies cell transfer delay, cell loss characteristics, and a traffic description that specifies the number of metering data cells that will be transferred to the prime supplier, Local REC/Second Tier Agent and the Pooling Settlement Administrator, and a specific data rate or speed. Should congestion occur the ATM network will selectively drop cells, the number dropped is also agreed under the QoS agreement, until the congestion clears. The REC must agree in turn to submit no more than the amount of metering traffic, agreed with the National Network Operator, for certain time periods. An ATM system however, because its cell structure allows it to separate physical data from virtual data, could also transmit cells containing Value Added Services, like digitised voice telephony, from the Local Collection Points to different locations, in the same bandwidth as metering data or instead of metering data because each cell is individually addressed.

6.5.2 The Synchronous Digital Hierarchy (SDH)

In 1985 [41] the American company Bell drafted an optical interface standard for synchronous networks, known as SONET. SONET was drafted with the intention of overcoming the limitations of existing networks based on the Plesiochronous Digital Hierarchy (PDH). In conjunction with the work being carried out by Bell, CCITT (now ITU) set up a study group which resulted in the release, in 1988, of the Synchronous Digital Hierarchy (SDH) recommendations. SDH integrated the

provisions of the European Carriers with those of the SONET standard in order to facilitate interfacing between European and US transmission systems.

One of the main attractions of SDH, is that SDH has been specifically designed with the data transmission requirements of users, network management, administration and operation requirements, of the operators/national carriers in mind. PDH on the other hand evolved purely as demands from users arose, and for situations which the Plain Old Telephone System (POTS) could not handle. These requirements mainly related to the transmission of ever increasing quantities of data, and not voice traffic. The requirements for PDH, developed in such an adhoc manner, leave a transmission system based on the PDH hierarchy with certain disadvantages, namely:

a. There is no single standard for PDH. The basic multiplexing level in the European system is based on a 30 channel 2.048 Mbit/sec rate whilst the American standard is based on a 24 channel 1.544 Mbit/sec rate. This led to difficulties in internetworking.

b. There was no single standard for line equipment.

c. There were different line coding standards for each of the hierarchical levels in the PDH system.

d. It was very difficult to directly recover a basic channel, once it had been multiplexed into a higher order multiplex stream. This led to the "Multiplexer mountain" problem, shown Figure 63, which resulted in both cost and performance penalties.

The Multiplexer mountain caused problems for operators/carriers in meeting their rapidly expanding network. A new set of operational requirements were needed, which could be summarised as follows:

a. Flexibility in routing so main trunks/routes could be rearranged if required.

b. Ability to measure service performance.

c. Ability to locate and repair faults quickly.

d. The ability to quickly restore the network following major route or other failures.

e. Efficient use of blocks of data.

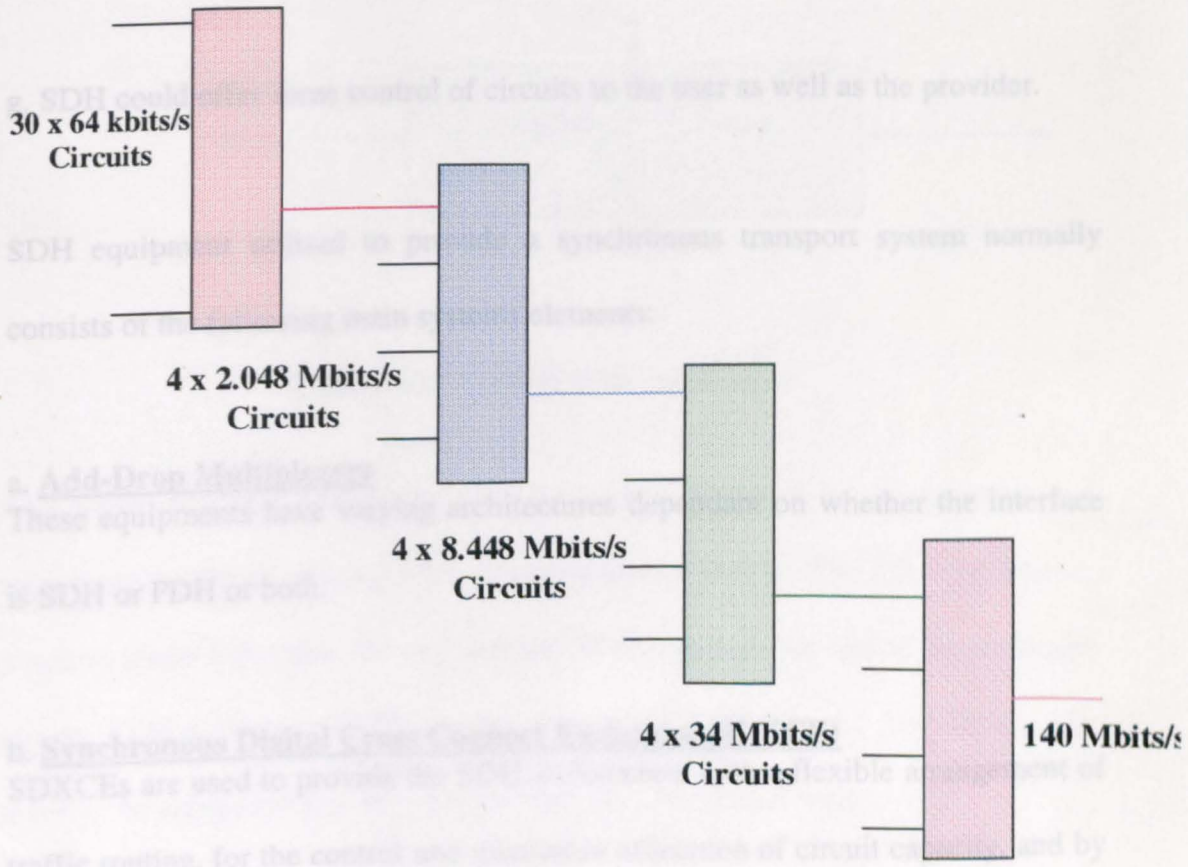

Figure 63 - The Plesiochronous Digital Hierarchy Multiplexer Mountain

SDH has been designed to meet these operational and transmission requirements, namely:

a. It has agreed world-wide standards up to data rates of 2.488 GB/s and beyond.

b. SDH provides automatic control of circuit provisioning.

c. Performance monitoring is provided.

d. SDH gives easier management of systems and circuit capacity.

e. SDH provides centralised access for testing.

f. SDH has optical interfaces into exchanges and other cross-connect points.

g. SDH could offer some control of circuits to the user as well as the provider.

SDH equipment utilised to provide a synchronous transport system normally consists of the following main systems elements:

a. **Add-Drop Multiplexers**
These equipments have varying architectures dependant on whether the interface is SDH or PDH or both.

b. **Synchronous Digital Cross Connect Exchanges(SDXCE)**
SDXCEs are used to provide the SDH architecture with a flexible arrangement of traffic routing, for the control and maximum utilisation of circuit capacity, and by

the provision of alternative routing facilities circuit protection and improved availability.

c. **Systems Management**

It is intended that SDH provides greater extensive administration, control and supervision. Some typical SDH component structures are detailed in Figure 64.

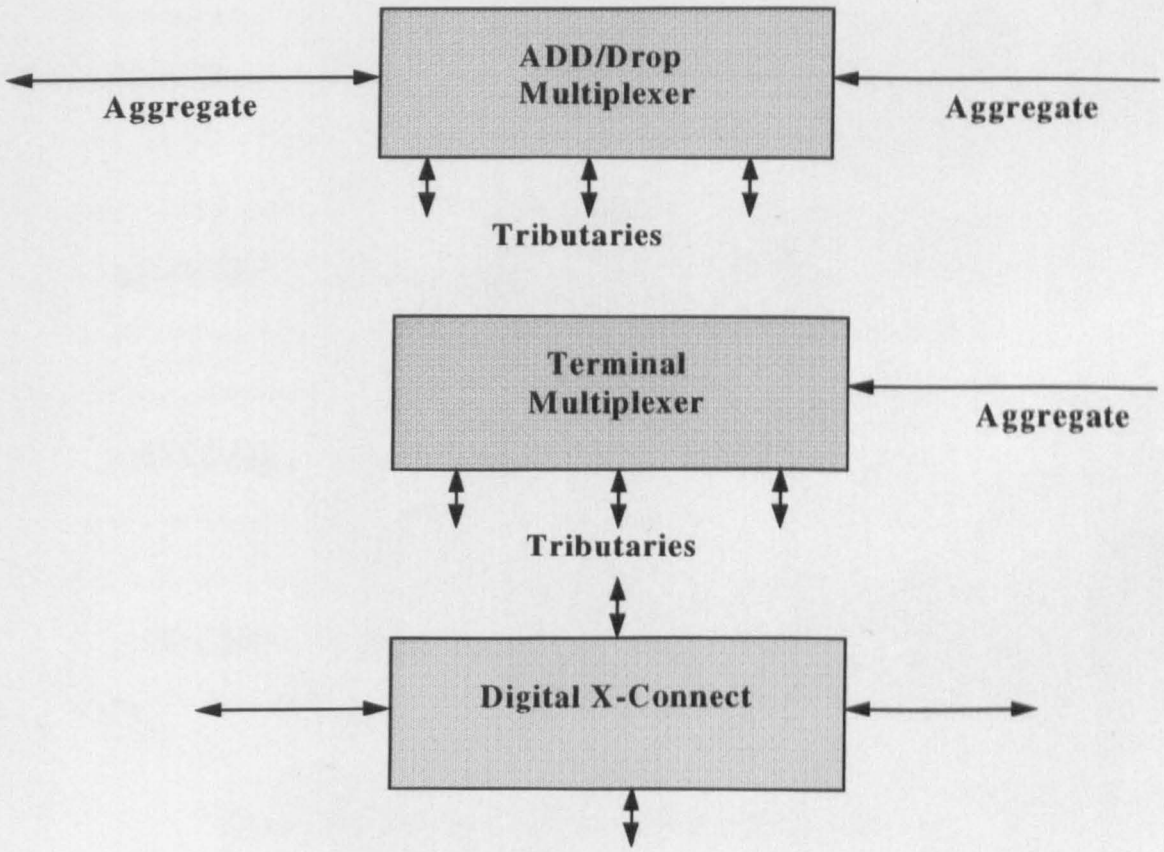

Figure 64 - Typical SDH Structures

SDH would not have gained the wide acceptance it has, if its development had immediately made all existing PDH infrastructures obsolete. The ITU regulations, therefore made it possible for any existing PDH transmission rate to be packaged into an STM-1 frame. All PDH rates between 1.5 Mbit/s and 140 Mbit/s can therefore be integrated into the STM-1 frame in a number of ways.

The combinations for STM-1 are detailed in ITU-T Recommendation G709. The SDH Transmissions Hierarchy is detailed in Figure 65

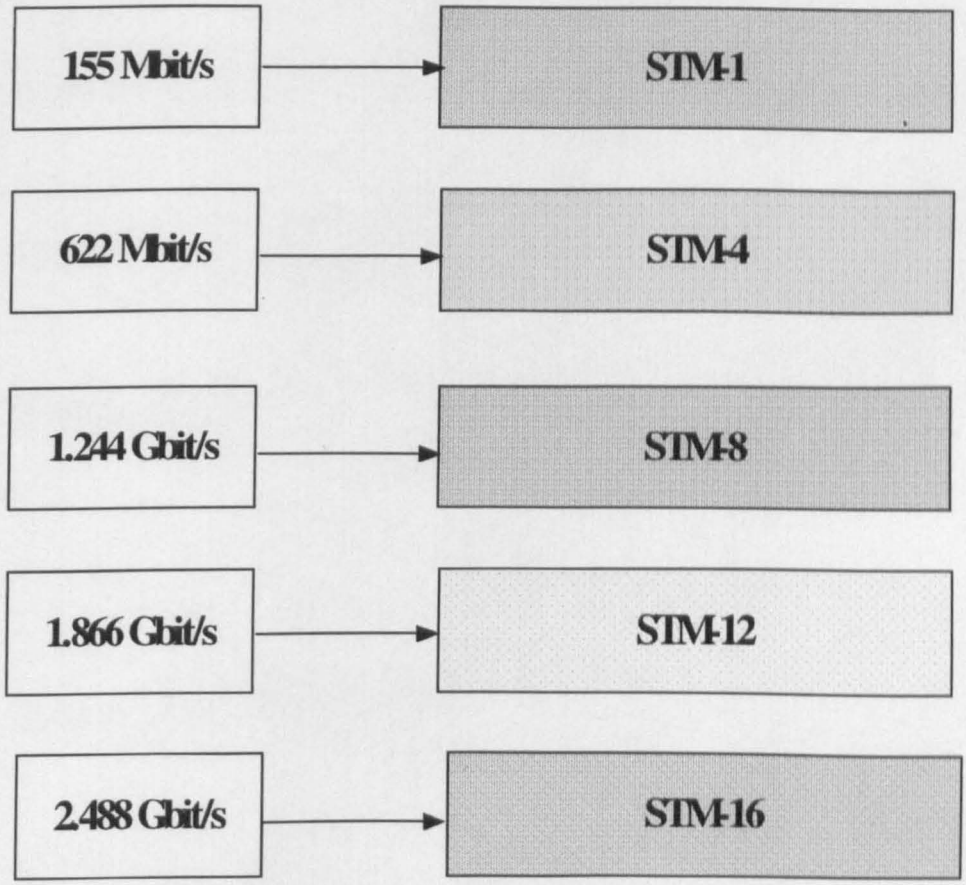

Figure 65 - The Synchronous Digital Hierarchy

Figure 66 details the SDH Multiplexing process. In the SDH system, data tributaries are mapped into a composite signal called a "container". The bit rate of the container is slightly higher than the tributary rate and includes any justification and equalisation. The way the mapping is done is similar in manner to 'bit stuffing' used in PDH Multiplexers. Each container then has some control information, entitled the "Path Overhead" added to it. The Path Overhead(POH) allows the network operator to obtain path to path monitoring of such parameters

as Bit Error Rates(BER). The container and Path Overhead are said to form a "Virtual Container".

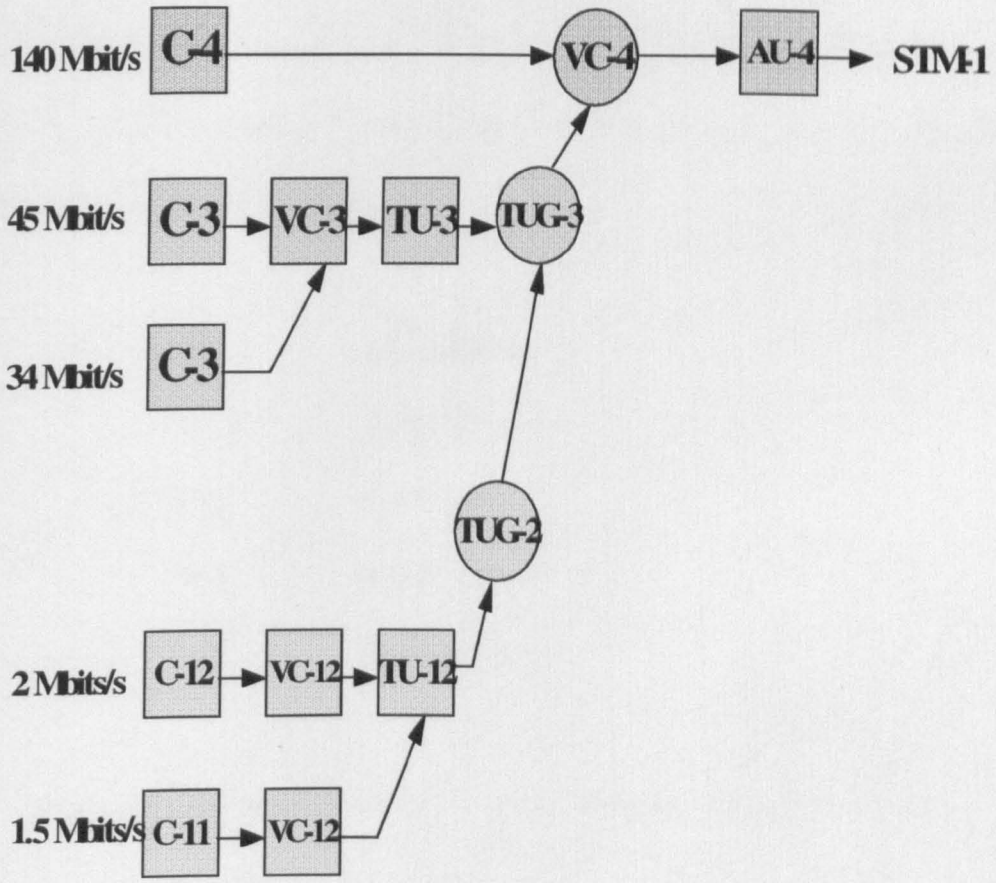

Figure 66 - The Synchronous Digital Hierarchy Multiplexing Process

Although the concept of an SDH network is based on synchronous operation, where all elements are controlled by an overall network clocking system, there can be delays associated with the length and types of transmission links used. As a result of these transmission delays the position of a Virtual Container may not be fixed within a STM-1 frame. Therefore any SDH receiving equipment would have

trouble demultiplexing an incoming signal. To overcome this limitation therefore a "pointer" is added to the frame structure, which is used to indicate the position of a Virtual Container in relation to the STM-1 frame. The pointer can be incremented or decremented, dependant on the movement of the VC within the frame. The pointer and the Virtual Container now form a Tributary Unit. ITU-T G709 fully defines the different combinations of virtual containers that can be used in the SDH system. In Europe there are four levels of multiplexing (Virtual Containers) in an SDH system:

VC11	1.664 Mbit/s***
VC12	2.240 Mbit/s***
VC2	6.848 Mbit/s
VC3	48.960 Mbit/s
VC4	150.336 Mbit/s

*** These rates are treated as one VC level. Data rates include overheads.

The Tributary Units are then used to form a Transport User Group, and several Transport User Groups could then be formed into an Administration Unit. Both the Tributary unit and the Administration unit are Virtual containers but the Tributary Unit is a frame internal unit. Once the largest size of Virtual Container that is full, has been achieved, more control information bytes, known as the Section Overhead (SOH), are added. The SOH remain with the STM-1 payload for the transmission network segment between two synchronous Multiplexers. The purposes of the SOH are to

provide the operations, administration and management functions, protection switching, performance monitoring, and frame alignment.

When higher multiplexing rates than 155 Mbit/s are required on an SDH network these are achieved by a byte interleaving process to obtain STM-4 and STM-16 rates.

6.5.3 The ATM/SDH and Integrated Remote Metering Communication and Information Systems Connection

SDH networks have the available bandwidth to provide B-ISDN services but lack the fabric to switch these services. ATM fulfills the missing switching function. The SDH standards have defined the mapping of ATM cells to the STM-1 format. Low concentrations of metering data ATM cells traffic such as may be carried in Integrated Remote Metering Communication and Information Systems could be more efficiently multiplexed, groomed and transported as a G.703, 2.048 Mbits tributary, as shown in Figure 67.

The E1, G.703/G.704, frame is 256 bits in length. The first byte of the frame, time slot 0, is allocated to overhead administration functions. Timeslot sixteen is reserved for signalling, when required, leaving timeslots 1-15 and 17-31 available for the transmission of cell based metering or Value Added Services payloads. Sixteen such 256 bit frames are then combined to form a multi-frame. Functions such as frame alignment, data link, cyclic redundancy check are distributed across the frame. Alternate frames could be used for different purposes, such as the transmission of Value Added Services. ATM cells are mapped directly onto the E1 frame as shown in Figure 67 using the ATM Transmission Conversion algorithm. Mapping at the high order tributaries, 8.448Mbits/s, 34.368 Mbits/s, and 139.264 Mbits/s follows the same process, as shown in Figure 67.

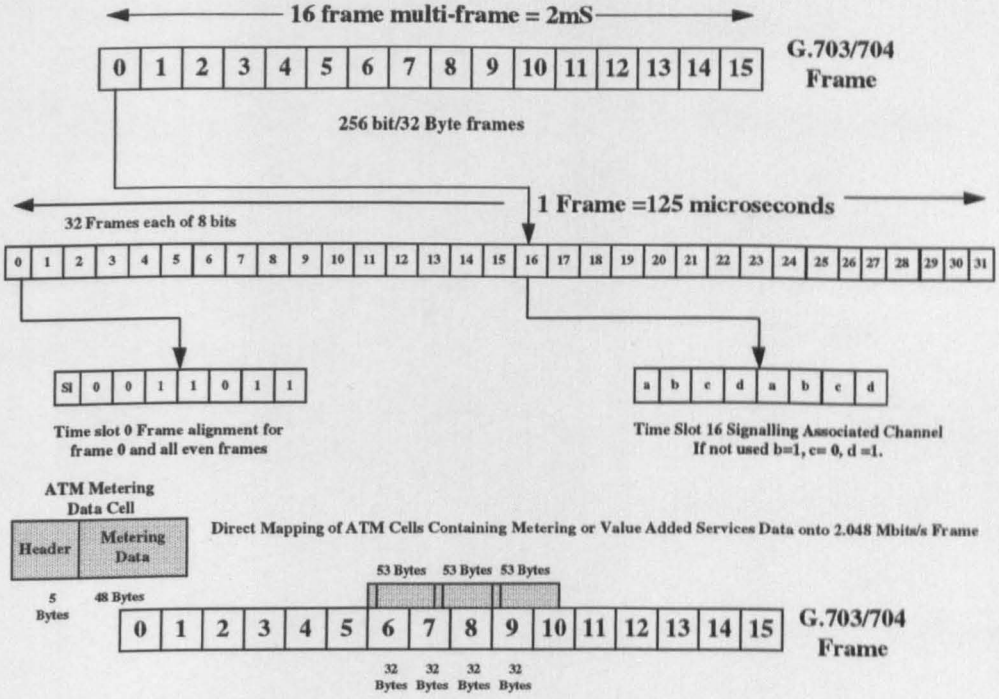

Figure 67 - Direct Mapping of ATM Cells Containing Metering Data onto PDH G.703, 2.048 Mbits/s Frame

The ATM cells can also be directly mapped onto SDH frames as shown in Figure 68. The functionality of such an SDH frame in a Remote Meter Reading system could include the use of the normal A1 and A2 bytes to delimit the start of a SDH metering data frame. The D4 to D6 bytes could be used to provide the Data Control Channel detailed in section 2.3.1. The D4-D6 bytes would interface to the three channels in the proposed amended Mains Signalling band of EN- 50065-1 shown in Figure 35. This would give a transparent Network Management Channel through the network from the Primary Supplier to the Metering Interface Unit and Meter. The E2 byte could also provide an Engineering Order Wire sytem or other Value Added Service channel for voice or data. The proposed Low Voltage Signalling channel that performs this function is also shown in Figure 35.

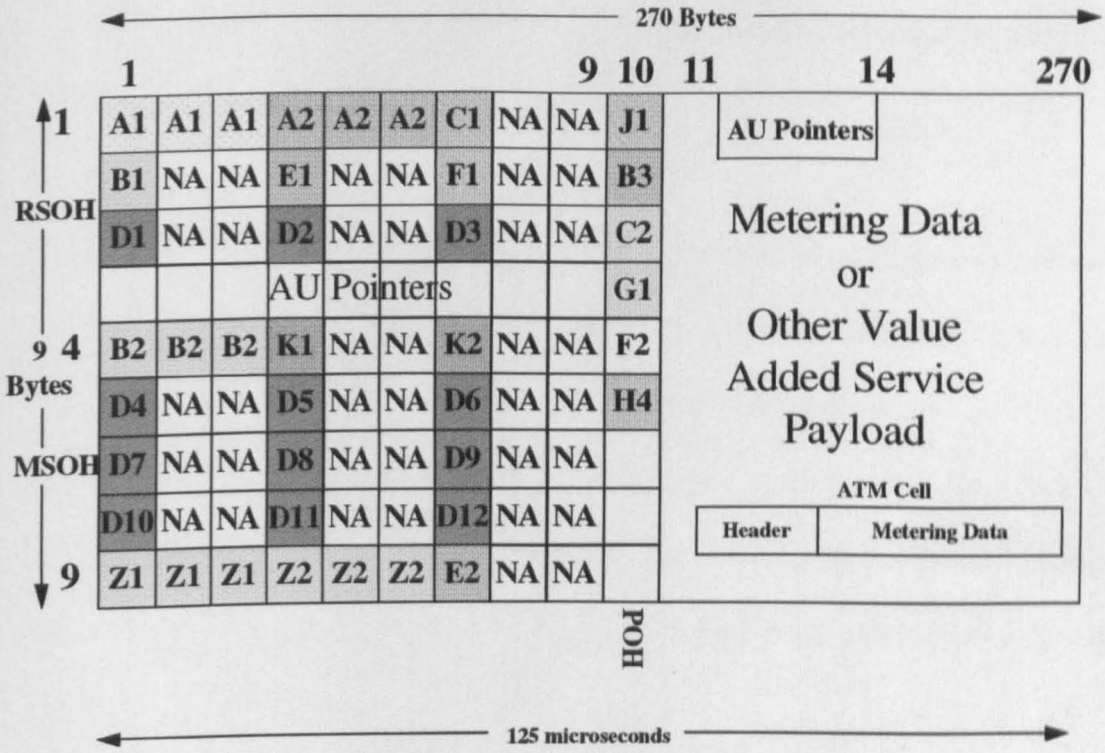

Figure 68 - Mapping An ATM Metering Cell Payload in an SDH Frame

The functions of the other SDH overhead bytes are not required in the proposed design and application of the Power Line Carrier and Remote Meter Reading used in an Integrated Services and Broadband Integrated Services Digital Network which is explained in section 7.10 but these functions are explained for completeness.

a. B1, B2 Bit Interleaved Parity for bit error monitoring

b. C1 STM Identifier.

c. D1-D12 Data Communication Channels.

d. E2 Orderwire Channel

e. F1 User Channel.

f. K1, K2 Automatic Switching (as detailed in G.783)

g. The bytes marked NA are intended for future national international and media specific uses.

The SDH overhead is split into two, as shown in Figure 68, a Regenerator Section Overhead (RSOH) and a Multiplexer Section Overheard (MSOH). There is a potential that the RSOH could be used to carry information, to and from the repeaters on a Low Voltage Distribution Network, configuration data to mains filters or other communications equipment. The Path Overhead (POH) contains information pertaining to the container, shown in Figure 66, and the bytes have the following functions:

a. J1 - Path Trace

b. B3 - BIP 8 on VC-4

c. C2 - Equipped or not Equipped

d. G1 - Path Status.

e. F2 - User Channel

f. H4 - Multiframe Indicator.

These overhead parts are used to carry management information and other protocols that help the SDH network route around failures and enhance fault tolerance. They are used for many functions including error monitoring. Each function is identified by a particular bytes location in the frame overhead. Many of these functions would not be used in an Integrated Remote Metering Communication and Information Systems but alternatively they could be used to provide Value Added Services in conjunction with unused ATM metering cells. The Data Communication Channels are particularly important because in conjunction with the Mains Signalling band of EN- 50065-1, shown in Figure 35,

they provide a method to access every Network Element as proposed in sections 2.3 and 2.3.1. Mapping of remote metering data shall be explained in more detail in section 7.10.

6.6 Tariffing Structures for an ATM/SDH Metering Data Transport Network

In section 6.5.1 the Quality of Service (QoS) for an ATM network was described. The Quality of Service (QoS) is the main differentiator between the billing of ATM and other data services such as X.25 or leased line. The provision of an economic Remote Meter Reading system is one of the reasons the Regional Electricity Companies may have to consider the provision of Value Added Services such as telephony and security monitoring. ATM not only offers the technical prospect of providing these Value Added Services, as shown in section 6.5.3, but offers an inherent method for billing users for them. ATM is designed to offer a flexible tariffing structure for communications data services and as such the ATM forum has defined four service categories.

- Constant Bit Rate (CBR)
- Variable Bit Rate (VBR)
- Available Bit Rate (ABR)
- Unspecified Bit Rate (UBR)

In section 6.2 the use of ATM, with an SDH network, was suggested as providing the RECs with an efficient and cost effect transport network based on the fact that the use of private ATM networks shall not depend on carrier tariff rates or by restrictions in Quality of Service. The Constant Bit Rate (CBR) ATM service could support voice, video and metering data connections where the traffic is characterised by a constant cell arrival rate. This service however because it

normally coincides with a known optimum transmission rate and guaranteed QoS commands a premium charge rate and may only be considered by the RECs in conjunction with the provision of Value Added Services.

The Variable Bit Rate (VBR) service could be ideal for the transmission of purely metering data as it is normally applied to traffic that has known or predictable 'bursty' traffic rates. This was one of the intentions of only reading meters at certain specific times, as suggested in section 1.2. Variable Bit Rate metering data traffic could be characterised by the 'On/Off' nature of the VBR service where during the proposed meter reading times, the 'On' period, cell transmission is based on a peak rate, whereas during no meter reading times, the 'Off' period, no metering data is transmitted. The VBR is further subdivided into two sub categories which are based on the delay requirements of the specific applications. These sub categories are the Real Time VBR and Non Real Time VBR.

Available Bit Rate (services) could also support a Remote Meter Reading System using a Power Line Carrier LAN based on the Low Voltage Distribution network. ABR is expected to support LAN interconnection with predictable traffic characteristics. ABR is defined for applications which could reduce their traffic rate if the network requires them to do so, or where the information transfer rate can increase if there is extra bandwidth available, within the network, to allow them to do so.

Unspecified Bit Rate (UBR) could also be used to support a Remote Meter Reading System using a Power Line Carrier LAN based on the Low Voltage Distribution network. UBR connections share the available network bandwidth which is available at any instant. Metering data cells would be transmitted into the

network by Metering Interface Units as they are generated on the Power Line LAN. However without the use of a flow control protocol, as proposed in section 2.6, the network has no means of indicating whether sufficent bandwidth is available. UBR traffic is given the lowest priority of any other service on an ATM network and does not have a guaranteed Quality of Service.

6.7 Conclusions

This chapter shows that the new technology and services introduced as a direct result of the deregulation of the United Kingdom telecommunications services, and in particular the use of Asynchronous Transfer Mode (ATM), in conjunction with the Broadband capabilities of the Synchronous Digital Hierarchy Transport Networks of the new licensed Public Telephone and Private Network Operators, is a significant factor for recommending its use for networking across the potentially wide areas of a communications network which could be involved in the transmission of Remote Metering Reading data. With the integration of metering data with voice, or other Value Added Services that may be needed to make a Remote Meter Reading network economically viable, ATM has both the technical capability and tariffing structure, as shown in sections 6.5 and 6.6, to provide this integration. Chapter 7 will show how, although Power Line Carrier and Asynchronous Transfer Mode (ATM) in conjunction with the Broadband capabilities of the Synchronous Digital Hierarchy Transport Networks are two diverse communications technologies, they can be combined to provide an Integrated Remote Metering Communication and Informations System with a suitable Network Management infrastructure.

Chapter 7 - A Generic Communication and Network Management System

7.1 Introduction

Chapters 1,4,5 and 6 have discussed the communications networks and technology associated with Remote Meter Reading. In considering the case for a remote meter reading system using Power Line Carrier and Broadband ISDN, this chapter investigates the practicalities of implementing and operating such a system and proposes more detailed solutions to some of the possible problems likely to be encountered in that implementation.

It has already been proposed, in section 6.1, to implement a Remote Meter Reading system using a Frequency Hopping Power Line Carrier system and the ATM/SDH network of a National Network Operator for the Customer Access and Transport Network communication elements respectively. A typical domestic electrical installation, to be used for the Power Line Carrier element, is detailed in Figure 69. The main Low Voltage Distribution network could also be as described in Figures 70 and 71.

7.2 Remote Metering System Customer Access

Delivery of an effective Remote Meter Reading system may signify, in some instances not only the capability for providing this service using Power Line Carrier but may also suggest an access method whereby it is more economic for different services, for example the gas, electricity, water and telephone companies, to share the access network in order to maximise use, against possible cost effectiveness benefits, to the customer and themselves.

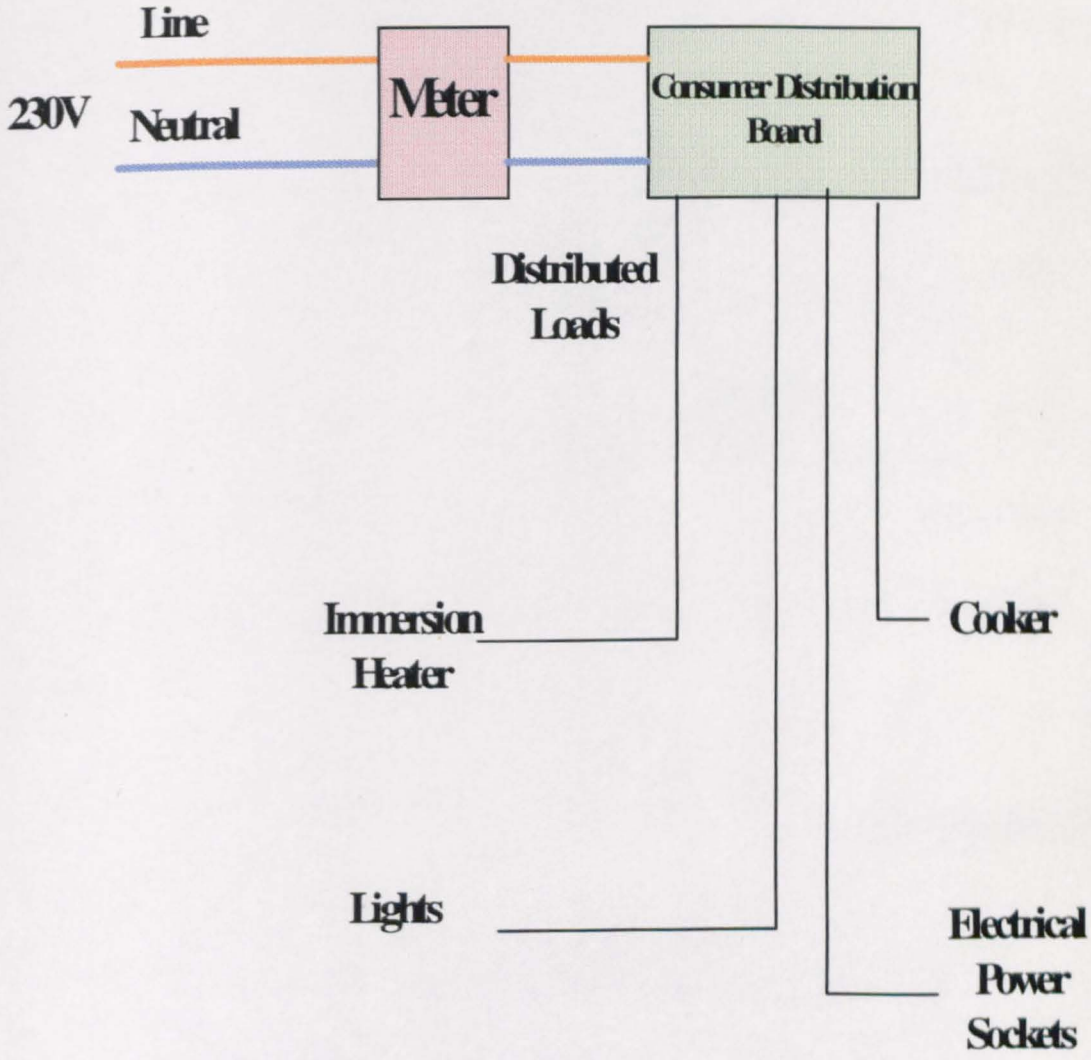

Figure 69 - Typical Domestic Electrical Distribution System

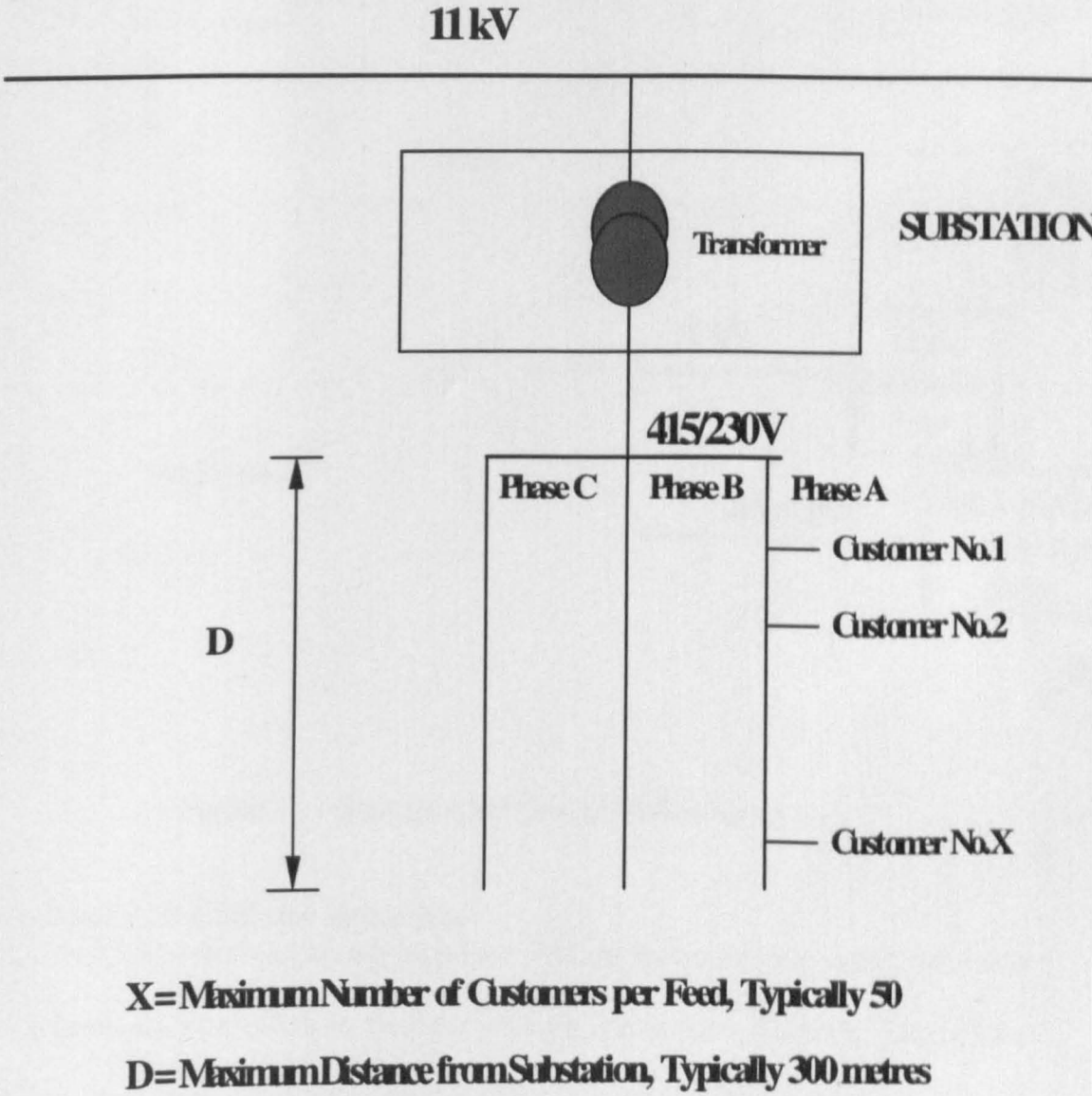

Figure 70 - Typical Loading on an Electrical Distribution Substation

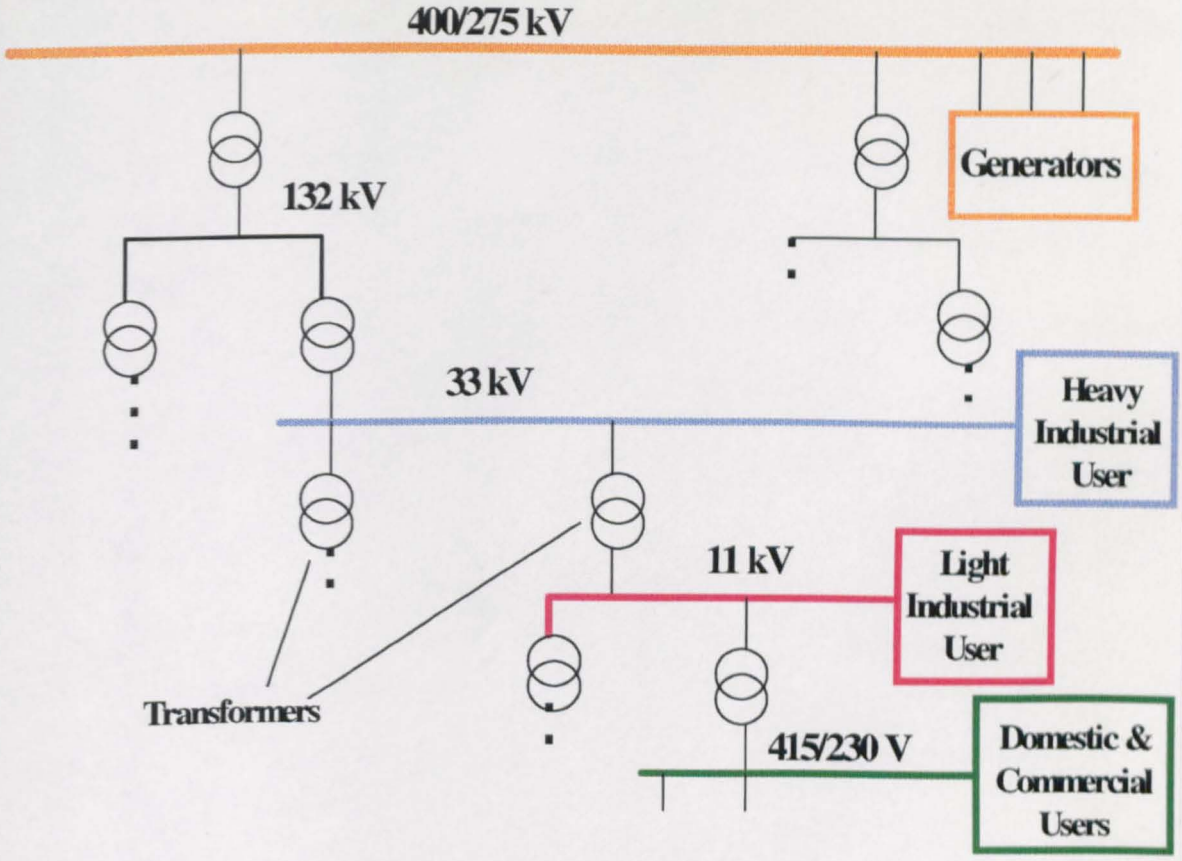

Figure 71 - Generic Electrical Distribution System

7.3 Power Line Carrier Repeaters

The level of attenuation present on power lines, as shown in Section 3.3, can cause a communication problem in the Low Voltage Distribution Network. Power Line Carrier Repeaters could overcome this problem by amplifying the Low Voltage Signal when required. It is possible by coupling a Power Line Carrier Repeater to the Low Voltage Distribution Network, as will be shown in section 7.4, to extract a Power Line Carrier Signal, filter and amplify it where necessary, and then re-inject it back into the Low Voltage Distribution Network for onward transmission.

The implementation of a Power Line Carrier Repeater is detailed in Figure 72. The use of repeaters on Power Line Carrier systems should not be on an adhoc basis, and needs careful planning. The number of repeaters on the Low Voltage Distribution Network, as will be discussed in section 7.10.1, can delay the propagation of a Low Voltage Signal through the network and affect efficiency. The areas where a Power Line Carrier Repeater should be deployed on the Low Voltage Distribution Network can be discovered by the proposed link planning method recommended in Annex B.

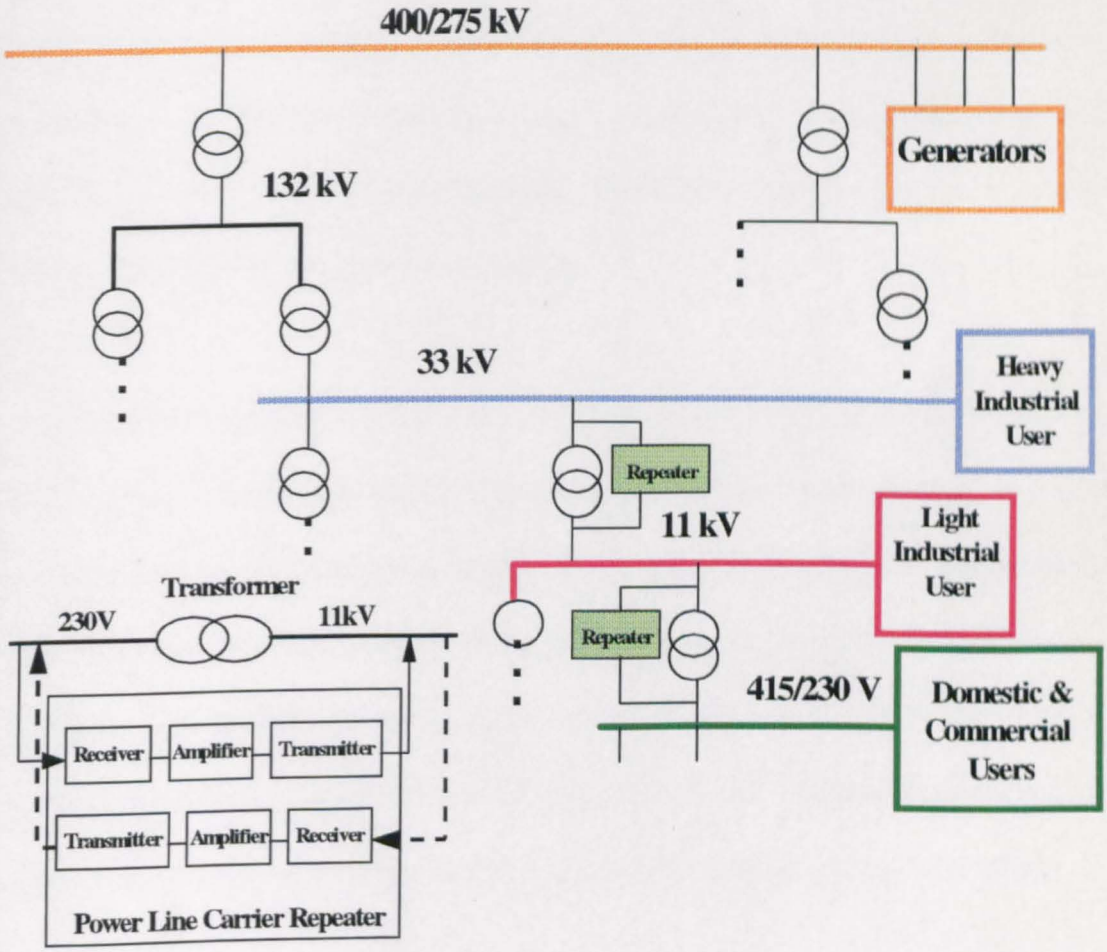

Figure 72 - The Power Line Carrier Repeater

7.4 Coupling Methods

Three methods have been devised for coupling communications equipment to the Low Voltage Distribution Network.

- Current Coupling
- Ground Coupling
- Inductive Coupling

The three methods of coupling used are shown in Figure 73. In current coupling an existing network current transformer is modified so it is possible for a transmitting and receiving device to inject and receive signals from the Power Line. These devices can be very inefficient due to the variance in network impedance, as detailed in section 3.4, and are not often used. In the other two methods, ground and inductive coupling, the transmit signal is injected between one phase and earth or between two phases.

Although both ground and inductive coupling methods are efficient [67, 87 and 89], inductive coupling is normally preferred [67, 89, and 136] since the insertion of capacitors on only one phase of the line, in ground coupling, can cause circuit imbalance and possible failure of any protection devices. Inductive coupling is the recommended method of injecting and receiving signals to and from the Low Voltage Distribution Network, but in order to provide flexibility a Power Line Carrier Communication device should also be able to couple to the other phases.

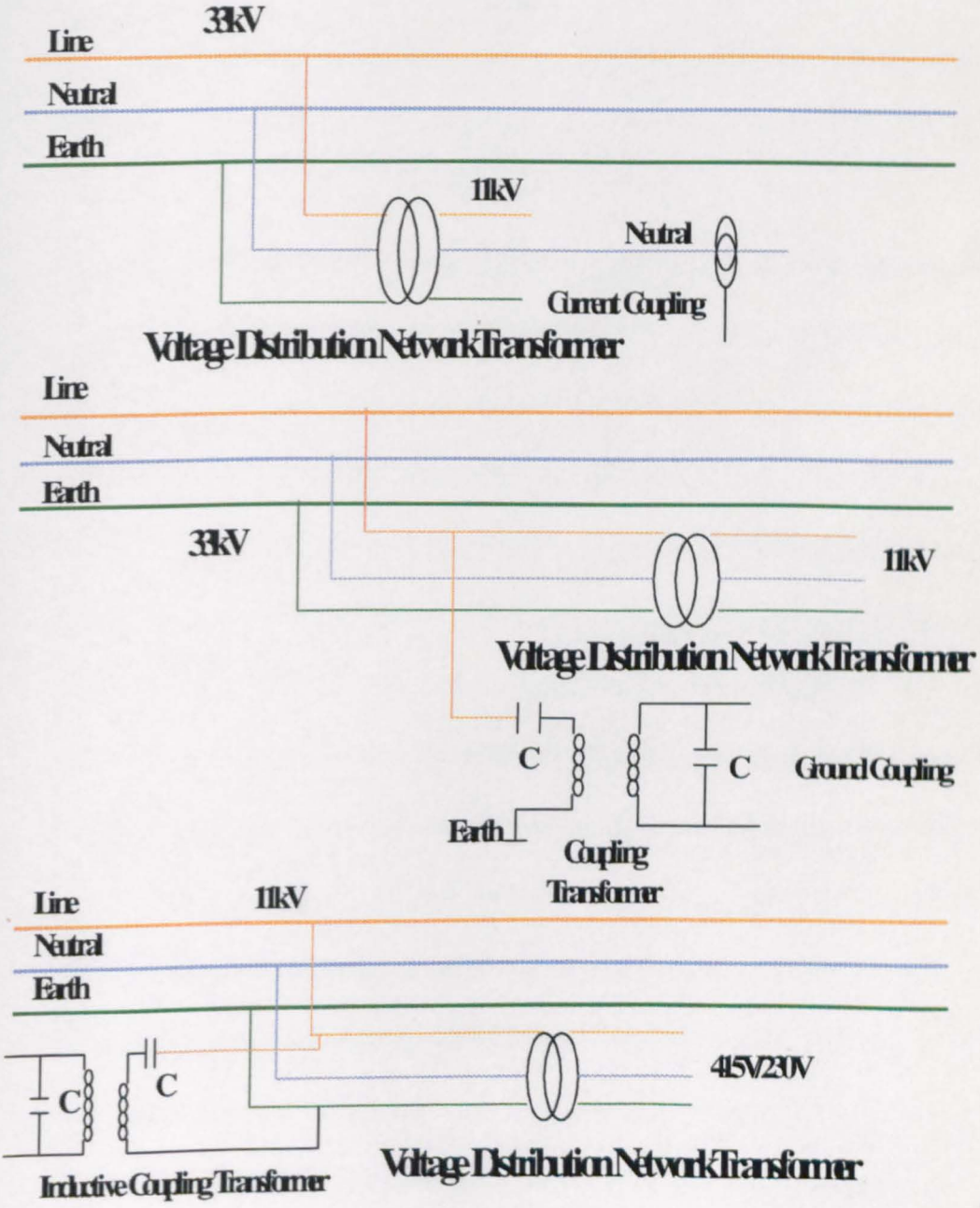

Figure 73 - Power Line Coupling Methods

7.5 Frequency Requirements of a Power Line Carrier System

The typical electrical distribution system of Figure 70 has a transformer which would normally feed 50 to 60 buildings per phase with the most distant building being 200 to 300 metres from the transformer. A Low Voltage Distribution Network can be expected to pass signals in the 4 kHz to 250 kHz band, as shown in section 3.3. Figures 25 and 26, of section 3.3, however show that attenuation on the Low Voltage Distribution Network, is also frequency related, with levels from 5 to 40 dB, depending on the actual frequency, and that the Loaded Line Impedance of the network can vary from 0 to 20 ohms, as detailed in section 3.4.

A Frequency Hopping Power Line Carrier system uses a mobile frequency criteria, as shown in section 3.19, and attenuation at one frequency will not affect the final operation of the system. Signal levels that could be used on a Frequency Hopping Power Line carrier system, although less influenced than conventional single frequency systems, are still determined to a great degree by the Loaded Line Impedance of the Low Voltage Distribution Network at the interface point. Research [11, 12 and 57] has been carried out on this subject for the various combinations, phase-neutral, neutral-earth, and phase-earth and this impedance also varies for these combinations. However, whilst in many systems live, earth and neutral are presented to the customer, in other systems, particularly in developing countries, the lack of an earth as a signalling medium external to the building means the phase neutral combination should be used. For flexibility it is recommended that the Power Line Carrier equipment should be able to interface to all three combinations, phase-neutral, neutral-earth, and phase-earth.

7.6 Frequency Hopping Power Line Carrier Channel Allocations

Although the main frequency range of Power Line Carrier operations, 3 to 148.5 kHz, is also classed as Low Frequency (LF) and is used by some radio systems, 3

to 300 kHz, it is not used extensively, mainly because of equipment costs and antenna sizes, and the chance of interference to external Power Line Carrier users in the same frequency band is minimal. For a Frequency Hopping Power Line Carrier system any interference to external users would be minimal dependent on the Dwell Time and the mean rate of occurrence of the particular frequencies in the system. Detailed proposals for a Frequency Hopping Power Line Carrier Channel plan are shown in Section 3.19.1.

7.7 Low Voltage Decoupling Filters

In order to avoid unwanted interference among mains communication equipment transmitting on Low Voltage Distribution Networks, a suitable filtering device, called a 'decoupling filter', must be installed either on the public supply network or within installations in consumers premises.

The conventional method of filtering on the public supply network, at the higher and medium voltage levels, to decouple unwanted frequencies, reduce mutual interference and HVDC converter noise [69], uses inductive components or "line traps", as required by BS 4996 (IEC 353). The line traps used have tended to be large and expensive because, in addition to filtering any unwanted frequency, they have to be capable of passing the 50/60 Hz power current. The capacitive components used also tend to be large, due to the high voltages present. CENELEC SC105A - WG4 is in the process of producing a standard which deals with Low Voltage Decoupling Filters, as part of prEN 50065, Signalling on Low Voltage Electrical Installations in the Frequency Range 3 kHz to 148.5 kHz.

The standard in question, prEN 50065-4, applies to decoupling filters operating in the range 3kHz to 148.5kHz but does not apply to general purpose filters for

Electromagnetic Interference suppression. The decoupling filter specified by prEN 50065-4 can be used in a stand alone configuration or incorporated in more complex devices where other optional coupling components are also used. The decoupling filter may be used to perform some or all of the following functions on the Low Voltage Distribution Network:

- To delimit the transmission area of wanted signals to the area in which the mains communication system operates.

- To reduce unwanted signals coming from the other side of the mains port.

- To allow simultaneous communication on both sides of the filter.

- To set a suitable impedance to the mains power ports.

- To provide a return path for the signal when needed (ie common mode propagation).

The use of decoupling filters is considered optional by prEN 50065-4 which also specifies the impedance and transfer function definitions, requirements and test methods, and additional requirements, for example Voltage Drop, Leakage Current, and Form Factor. The impedance and transfer function are referred to the mains power ports of the decoupling filter.

For succesful operation on Low Voltage Networks a decoupling filter shall need to be able to operate over a selected range of voltages and currents. In the United Kingdom this means a voltage range from 230V to 400V and a current range of 6,

10, 16, 20, 25, 32, 40, 50 63, 80, 100 and 125A. Section 3.4, stated the problem in accurately calculating the Loaded Line Impedance of a Low Voltage Network. prEN 50065-4, paragraph 5.2.1 (a) deals with this problem by specifying that on the Consumer Side, for the frequencies 95kHz to 148.5kHz, and for the signal levels specified in EN 50065-1 the decoupling filter shall have a modulus impedance greater than 10Ω. At the Utility Side of the decoupling filter, for a frequency range of 3kHz to 95kHz, the same impedance value of 10Ω. shall apply.

Exception is made to these values of impedance in prEN 50065-4 in the case where the decoupling filter is used to create a return path for a signal. In this case the impedance may be lower when measured at the side of the coupling filter where the return path or phase coupling is required. In order to provide a constant method of measurement for the impedance at the individual frequencies that are possible in the ranges 3kHz to 95kHz and 95kHz to 148.5kHz the impedance curves used must not show resonance phenomena with a Q factor higher than 6 with the opposite side mains ports opened or short circuited.

One of the main problems in defining the prEN 50065-4 standard was how to specify the transfer function of the decoupling filter with respect to the different load values of the impedance that can be found in a Low Voltage Distribution network. The approach to resolving this problem, since no satisfactory calculation method is available as yet, was to carry out a limited programme of network impedance tests in several European countries. The results of the tests, shown in section 3.4, led to the requirement that the transfer function of the decoupling filter has to be characterised in respect to two different load values, 5Ω and 50Ω respectively. For the signal levels specified in EN 50065-1 the decoupling filter is

already stated as having a modulus impedance greater than 10Ω but 5Ω is chosen as being the mean value of the network impedance in the considered frequency range.

The voltage drop across any decoupling filter in the Low Voltage Distribution Network should not exceed 1Vrms when measured at the rated current and frequency although it is acknowledged that any decoupling filter may alter the form factor of a voltage waveform.

prEN 50065-4 is still in draft form and further work being carried out by SC205A - WG4 concerns initial plans to produce a product standard for decoupling filters in three parts. The three parts proposed are:

- Incoming Filter
- Impedance Filter
- Segmentation Filter

The practical implementation of decoupling filters is still an open subject at the moment. In general either an approach using passive, purely inductive, capacitive or resistive components, or an active decoupling filter approach, using operational amplifiers for example, or a combination of these two approaches could be used.

7.8 Synchronisation and Security

7.8.1 Security

In a Power Line Carrier Communication and Remote Meter Reading sytem for use in Integrated Services and Broadband Integrated Services Network employing an ATM/SDH network, the security of communications within the ATM/SDH

transport network are provided by an ATM 'firewall'. The ATM 'firewall' can authenticate metering data cells from other cells. Traditional firewall methods have tended to filter out packets with for example the incorrect header. The ATM 'firewall' takes this security process a stage further and in addition to checking header information provides full bandwidth filtering at the ATM metering data cell level. Full bandwidth filtering of metering data cells allows the Network Management System or Network Operator to inspect every cell if necessary. Any cell that is not included on a list of VPIs or VCIs is 'captured and discarded' whilst metering data cells are allowed to pass through the 'firewall'. The concept of the ATM 'firewall' is shown in Figure 74.

This level of cell surveillance is provided in ATM networks and would be necessary on a Remote Metering Network to prevent 'hackers' entering the network in order to access metering or management data.

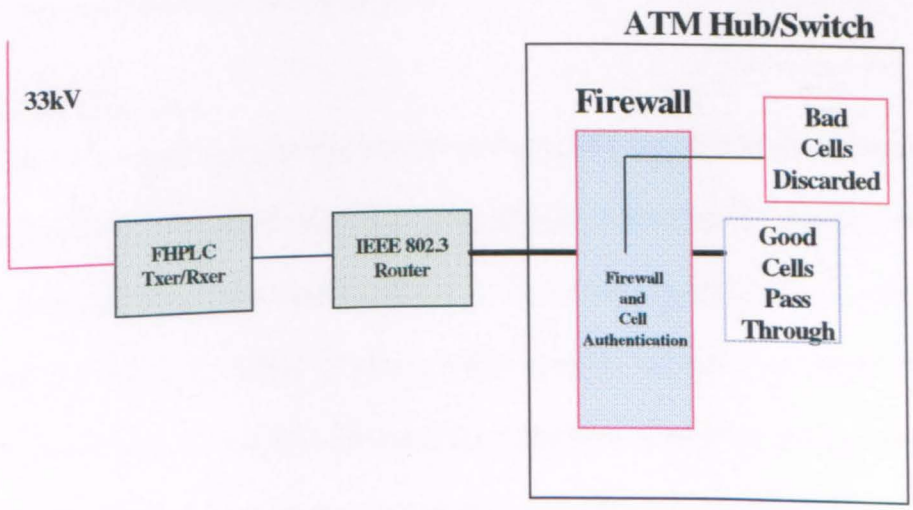

Figure 74: - The ATM Security Firewall

Although Frequency Hopping Power Line Carrier provides a level of inherent security in the Customer Access element of the system it is possible that given the ready availability of low price electronics for a 'hacker'to deliberately seek out the hopping sequence and interfere or change this in some manner to corrupt the metering data. Further security could be provided by the use of "Time of Day" and "Word of Day" as suggested in section 3.19. The Word of Day is a special programmed security feature which is sent to every Frequency Hopping Power Line Carrier Receiver in a Customer's premises. On receipt of this "Word" the Customer Premises equipment is made aware that some authorised change is about to take place in its mode of operation. If the "Word of day" is followed by another coded sequence, "Time of Day" the Customers Premises equipment realises it is to change the sequence of frequency hopping to another pre-programmed sequence. Using this method, in cases of deliberate or non deliberate interference, the REC concerned can alter the frequency hopping sequence when ever it chooses thus increasing the level of security available.

7.8.2 Synchronisation

It is generally undesirable for there to be any special preamble in the modulation or hopping pattern of a Frequency Hopping Power Line Carrier signal, otherwise system security could be compromised. It is necessary to devise a method or methods for the acquisition of the synchronisation by the Frequency Hopping Power Line Carrier receiver. One possible technique would be for the Frequency Hopping Power Line Carrier receiver to anticipate the transmitted hopping pattern and have as its key one frequency of that hop pattern which it is expecting to receive. The Frequency Hopping Power Line Carrier receiver is in effect pre-set to a future point in the pseudo-random frequency sequence. When the receiver detects this particular key signal it starts to hop in conjunction with the transmitter

and continues the sequence from this pre-set point. Obviously the metering data in this received signal coincides with that in the transmitter, both being now at the same point in the hopping sequence, and the receiver continues to detect a signal each corresponding hop period. The system has some drawbacks however. The signal detected on the waiting frequency may have been deliberately introduced by someone to interfere with the metering data, as suggested in section 7.8.1, or the transmitter could have used this frequency at some other point in the random sequence thus starting the receiver at a false point and leading to the receipt of corrupt metering data.

To improve the acquisition performance of the receiver it is possible to have a system whereby the receiver anticipates the transmitted sequence but instead of relying on the detection of a single frequency, the receiver hops slowly through the sequence until a known signal is detected, at this point the receiver hops at the regular hopping rate. After a predetermined number of hops where receiver and transmitter are compatible the probability that the receiver and transmitter are synchronised is "high" and the receiver starts to decode the metering data. If the correlation between incoming signals at the receiver does not hold then the probability is that the incoming data was spurious and the receiver resorts to slow hopping until synchronisation is achieved. This feature has obvious inbuilt security since to cause any deliberate interference with the metering data the perpetrator would have to know exactly the receiving synchronisation sequence to be used. Synchronisation of the other communications elements of the system, the routers, ATM Hubs, and the SDH elements can be done directly or indirectly from the Public Telephone or Private Network Operators Primary Reference Clock as shown in Figure 75.

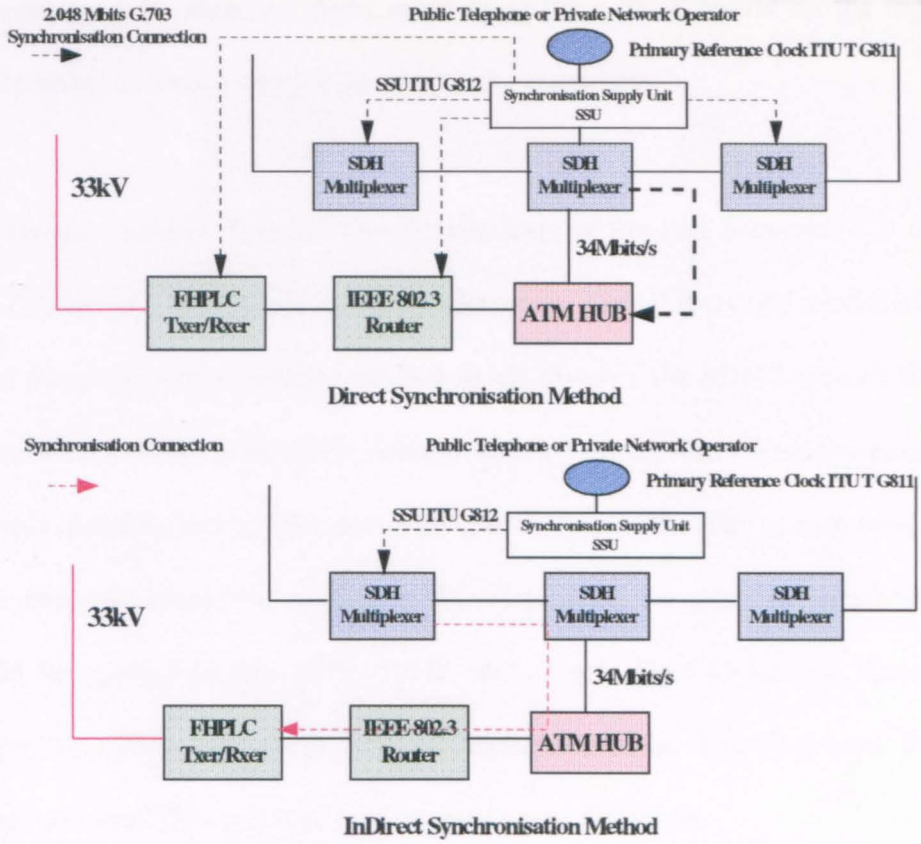

Figure 75 - Synchronisation in a Power Line Carrier and Broadband Integrated Services Digital Network Used For Remote Meter Reading

In the direct method each individual Remote Meter Reading Network Element would receive a synchronisation signal from the Public Telephone or Private Network Operators Primary Reference Clock Synchronisation Supply Unit. The Primary Reference Clock in SDH networks is governed by ITU regulation G.811 and has a long term stability of 1.10^{-11}. The theoretical long term mean rate of occurence of controlled metering frame slips, as detailed in ITU G.811, is not greater than one in 70 days with this synchronisation system. The Synchronisation Supply Unit is governed by ITU regulation G.812 and can have two standards, Stratum 2, which corresponds to a frequency drift of no more than 1.10^{-9} per day, or Stratum 3, which corresponds to a frequency drift of no more than 2.10^{-8} per day. The direct method of synchronisation shown in Figure 75 would not be recommended for a Power Line Carrier and Broadband Integrated Services Digital

Network used for Remote Meter Reading as the cost of providing the individual synchronisation links could be prohibitively expensive.

The second method, Indirect Synchronisation, is the one proposed for a Power Line Carrier and Broadband Integrated Services Digital Network used for Remote Meter Reading. In the indirect method at least two of the SDH Network Elements synchronise directly to the SSU, usually with a Primary and a Standby connection. The rest of the Network Elements then synchronise to the data stream produced by these elements as shown in Figure 75. The indirect method of synchronisation would be applied to the SDH, ATM Hub, Local Data Collection Power Line Carrier Transmitter/Receiver, and the router elements. The Customer Premises equipment would be synchronised as previously described.

7.9 Customer's Premises Equipment on a Frequency Hopping Power Line Carrier Customer Access Network

The more detailed discussion of the practical implementation of Remote Meter Reading communications, for example security, suggest an amended systems configuration to the proposed Customer Premises equipment of a Frequency Hopping Power Line Carrier network. This configuration is shown in Figure 76.

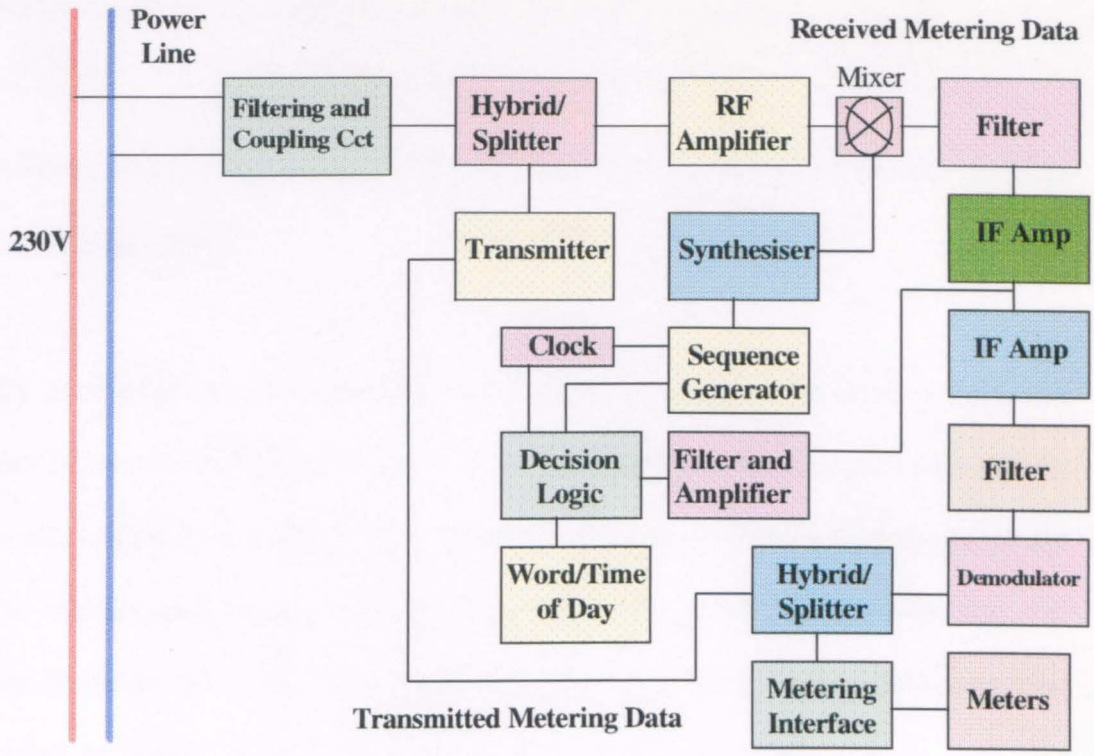

Figure 76 - Modified Frequency Hopping PLC Customer Premises Equipment

For safety reasons an isolation circuit is required when equipment is coupled to a Power Line. Isolation should allow the transfer of Remote Metering data from, for example, a Customer Premises equipment to the Power Line without direct electrical connection. It is proposed to combine inductive coupling with optical coupling to provide a safe and efficient means of connecting to Power Line. Fuses and safety resistors would also be used. Inductive coupling could be used as the solitary isolation method with the relevant fusing and safety resistors, and will allow the transfer of mains signalling through the mutual inductance of the windings.

Although transformers can match various circuit impedance's there are potential problems:

• They could be large and have a limited frequency response.

• Transformers can also allow noise coupling between windings if an inter-winding shield is not used.

By combining Inductive coupling with Optical coupling some of these problems can be overcome. Optical coupling is very effective at eliminating common mode noise, caused by ground loops or ground current noise, since it completely breaks the metallic path of two grounds. Opto isolation devices are available that can handle large differences in ground voltages, 3 kV being typical. Although best suited to digital circuits, optically coupled analogue systems can be used. An example configuration is detailed in Figure 77 with a proposed safety configuration in Figure 78.

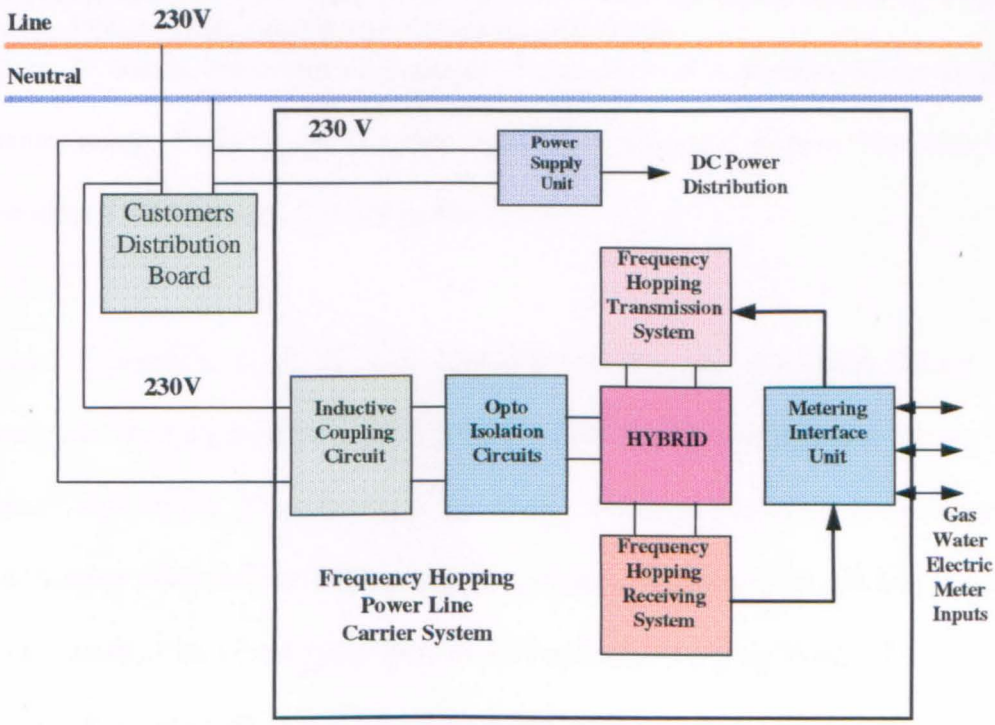

Figure 77 - Interfacing a Frequency Hopping Power Line Carrier System to the Electrical Distribution Network

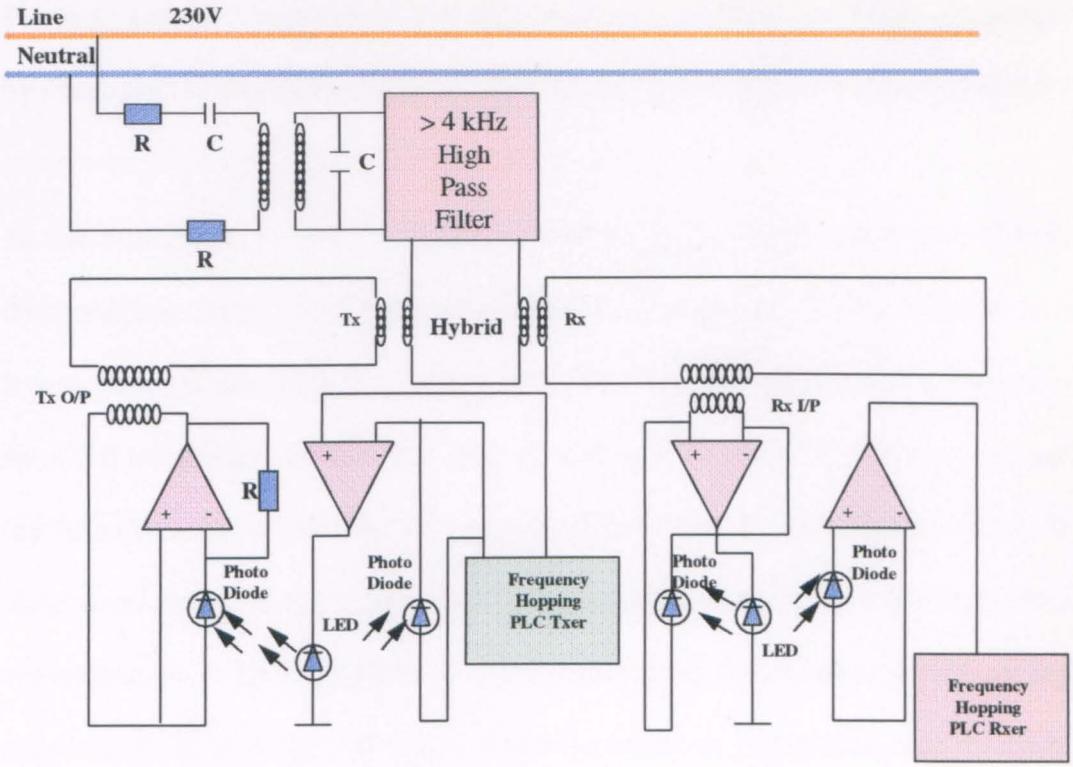

Figure 78 - Safety Circuit

7.10 Systems Architecture of a Practical Remote Meter Reading System Using Power Line Carrier and Broadband ISDN

Figure 79 details the potential Systems Architecture of a Remote Meter Reading system using Power Line Carrier for the Customer Access Network and Broadband ISDN for the Transport Network.

At the Customers Premises, the Metering devices are connected directly, or through a Metering Interface Unit (MIU), to the Frequency Hopping Power Line Carrier equipment. The software for these Network Elements shall either be downloaded from the network management system, or already installed in the MIU or the meters. The Customers Premises Frequency Hopping Power Line Carrier equipment is connected to a Local Data Collection Centre via the Low Voltage Distribution Network. If attenuation levels are as detailed in section 3.3, for example because of intermediate transformers between the Customers

Premises and the Local Data Collection, then these transformers shall be bypassed by Frequency Hopping Power Line Carrier Repeaters, as discussed in section 7.3.

At the Local Data Collection Centre a Frequency Hopping Power Line Carrier demodulation system shall decode the incoming metering data and pass it to a bridge/router via an IEEE 802.3 LAN interface. The Bridge/Router is connected to an ATM hub/switch via an High Speed Serial Interface or V.35 interface. From the ATM hub the ATM/SDH Network interface is an ITU 34 Mbits/s, G703, 75 ohms connection. If the SDH node is not co located with the ATM hub, then connection could be by Optical Line Terminating via optical fibre, or Broadband microwave radio equipment. Once metering traffic is transmitted into the SDH network it can be routed to the main collection centres of the Local REC/Second Tier Agent and the Primary Supplier using the method detailed in section 6.5.3. Data could also be routed to the NGC or Pooling Settlement Administrator if required. The network data rates would depend on both the Frequency Hopping Power Line Carrier system used on the Low Voltage Distribution Network and the Public Telephone or Private Network Operator's configuration. These rates, as shown in Figure 65 of section 6.5.2, could range from 155 Mbits/s to 2.488 Gbits/s. Alternative routing facilities could be provided at a number of points in the system architecture to provide inherent flexibility in the system.

At the Customers Premises the meters and/or the MIU shall have standard interfaces, such as RS232C, to connect to alternative communications systems if a Power Line Carrier system is not available. An alternative communications access system could be provided by telephone line, or radio (including wireless in the local loop, cellular radio, or VHF/UHF) if Value Added Services were required. An option for alternative routing could also be implemented at the Local Data

Collection centre, if the ATM hub/switch was not co-located with the SDH node, and the alternative communications links could be provided by leased digital circuits or Broadband microwave radio.

Metering Data Collection devices, possibly computer servers or other storage devices, should be provided at the Local Data Collection centre as back-up facilities, with a reduced data storage capability, to be used in the case of catastrophic failure of the communication links to the Local REC/Second Tier Agent and the Primary Supplier. Meter reading would normally be initiated automatically from the Primary Supplier by requesting data from each meter at specific timed intervals. The meters would also be polled at specific intervals to ascertain they were still operational. In a situation where the meter was at risk the meter would inform the Main Collection centre by setting a Flag in its Data Word, as proposed in section 2.10.

For tariff increases/decreases the Primary Supplier could instigate this universally through a broadcast command or singly through individual addressing. In addition to modulating and demodulating the metering data the Frequency Hopping Power Line Carrier system located in the Local Data Collection Centre would continually monitor the Low Voltage Distribution Network for the optimum frequencies to be used in its hopset. This would be done by Real Time Channel evaluation by sending a Low Voltage signal at different frequencies, and at pre-set timing intervals, to the Customer Premises Frequency Hopping Power Line Carrier system. On successful receipt of such a signal the relevant Low Voltage signalling frequency could be stored and included in a later 'hopset'. The same Real Time Channel evaluation method could also be used to ensure the Low Voltage Distribution Network was still functioning. As long as the Low Voltage signal

being sent from Local Data Collection Centre, is being received successfully, at the Customer Premises, at a specific signal level, and signal to noise ratio + distortion (SINAD), the Low Voltage Distribution Network can be considered operable. Expected signal levels and SINAD could be stored in the memory of the Customer Premises Frequency Hopping Power Line Carrier receivers and used for comparison purposes.

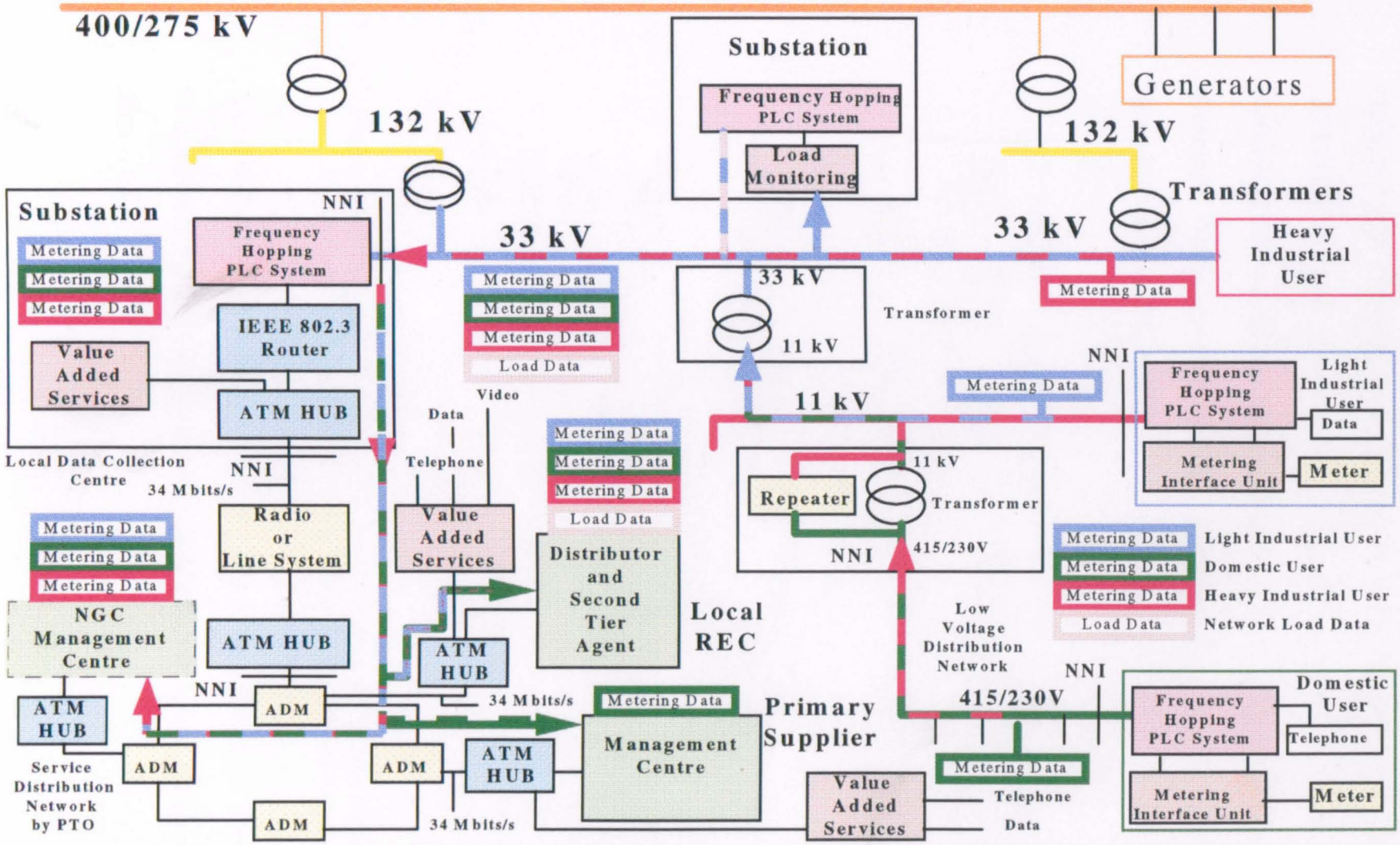

Figure 79 - Architecture of a Remote Meter Reading System Using Frequency Hopping Power Line Carrier Access Network and ATM/SDH Transport Network

Figure 80 shows the architecture of the ATM switch in a Remote Meter Reading System Using Frequency Hopping Power Line Carrier Access Network and ATM/SDH Transport Network of Figure 79, and suggests how the Value Added Services, detailed in section 6.2, could be integrated with the Power Line Carrier Customer Access Network to Wide Area Transport Network Interface of a Remote Meter Reading system:

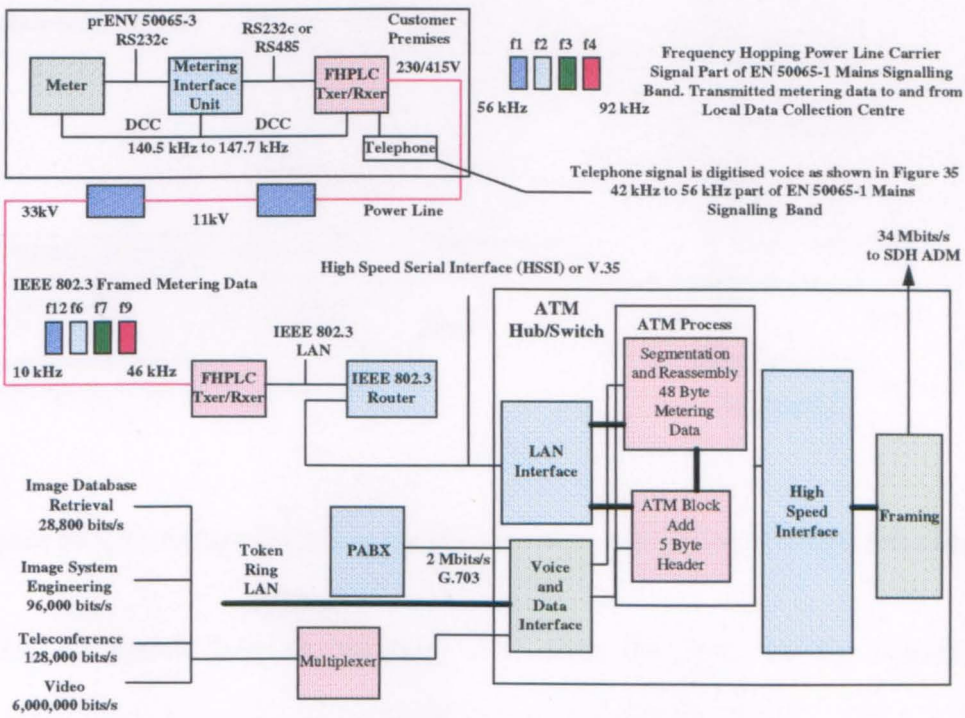

Figure 80 - Integrated Remote Metering Communication and Information Systems Infrastructure Providing Other Value Added Services

The first step in the processing of metering data in the networks of Figure 79 and 80 is shown in Figure 81 and includes the IEEE 802.3 framing functions detailed in Section 2.8.

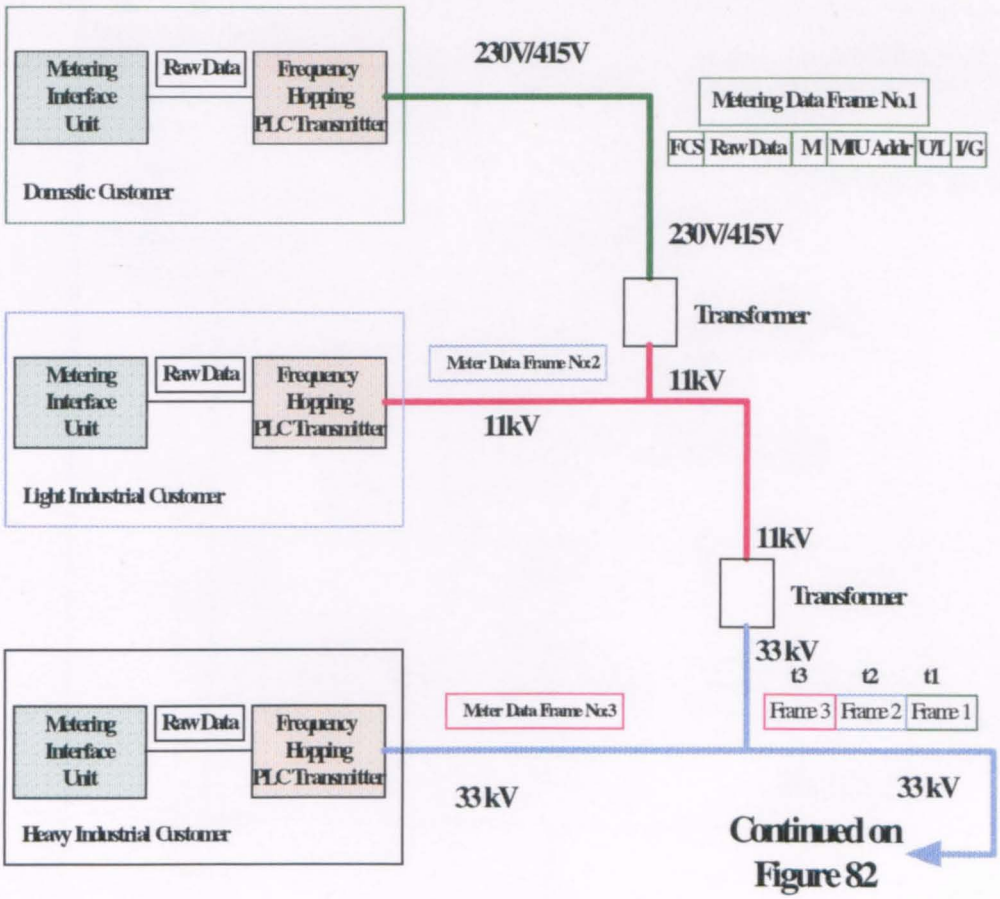

Figure 81 - Metering Data Frame Processing on the Low Voltage Distribution Network

Figure 82 details how the metering data from the Low Voltage Distribution Network is further routed by using the ATM cell header facility to forward both independent and composite data frames to the required destinations of the Local REC, Primary Supplier, and NGC.

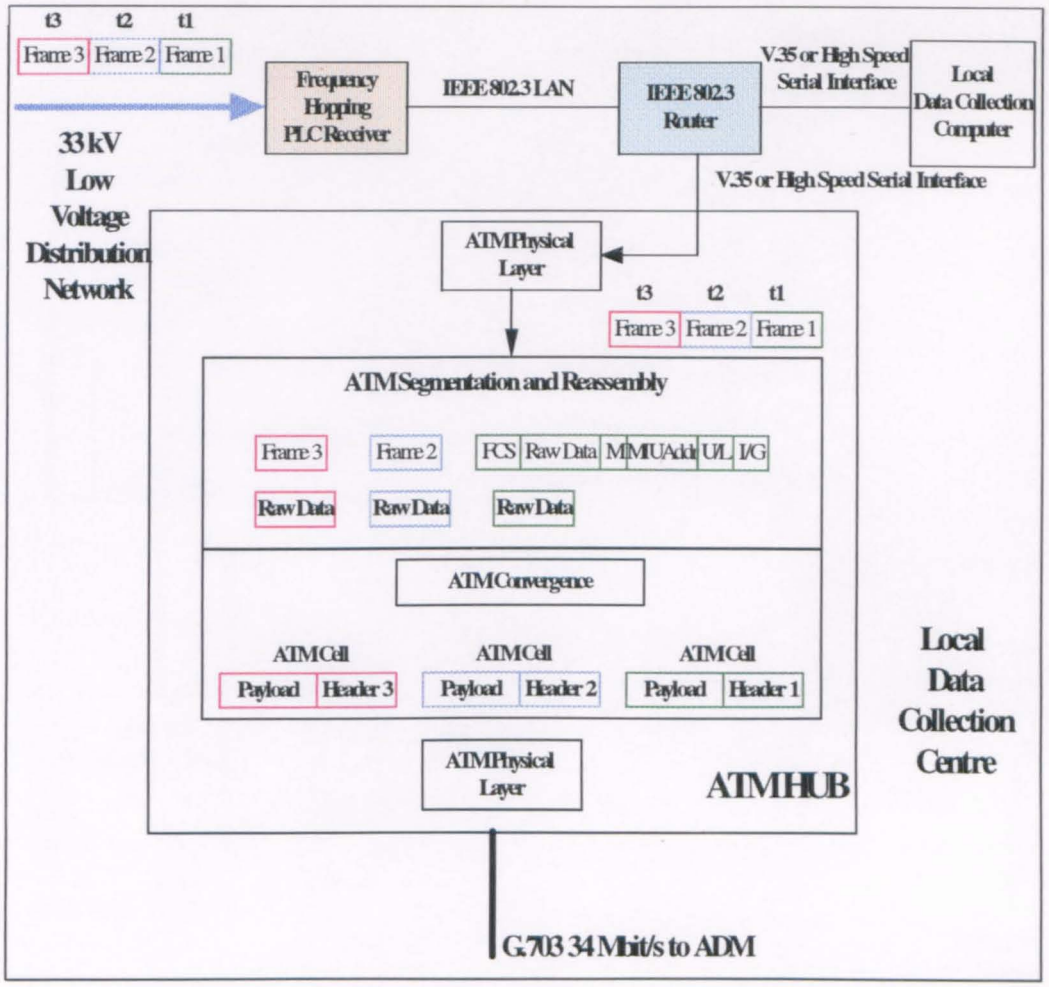

Figure 82 - Mapping of Raw Metering Data Onto ATM Cells

The ATM segmentation layer breaks up and reassembles the packetised metering data from the Low Voltage Distribution network into metering data cell payloads. The ATM convergence layer maps the ATM cells into a physical framing format suitable for transmission onto the Service Distribution Network of the PTO. The ATM convergence layer is responsible for identifying the beginning of the metering data cell payloads. The ATM convergence layer ensures that the cell transmission rate is compatible to both the SDN and Low Voltage Distribution Networks by inserting and removing idle cells to pad the transmission rate to the bit rate being used. Figure 83 shows how the ATM cells containing the metering data are processed into the SDH frame for transmission across the SDN.

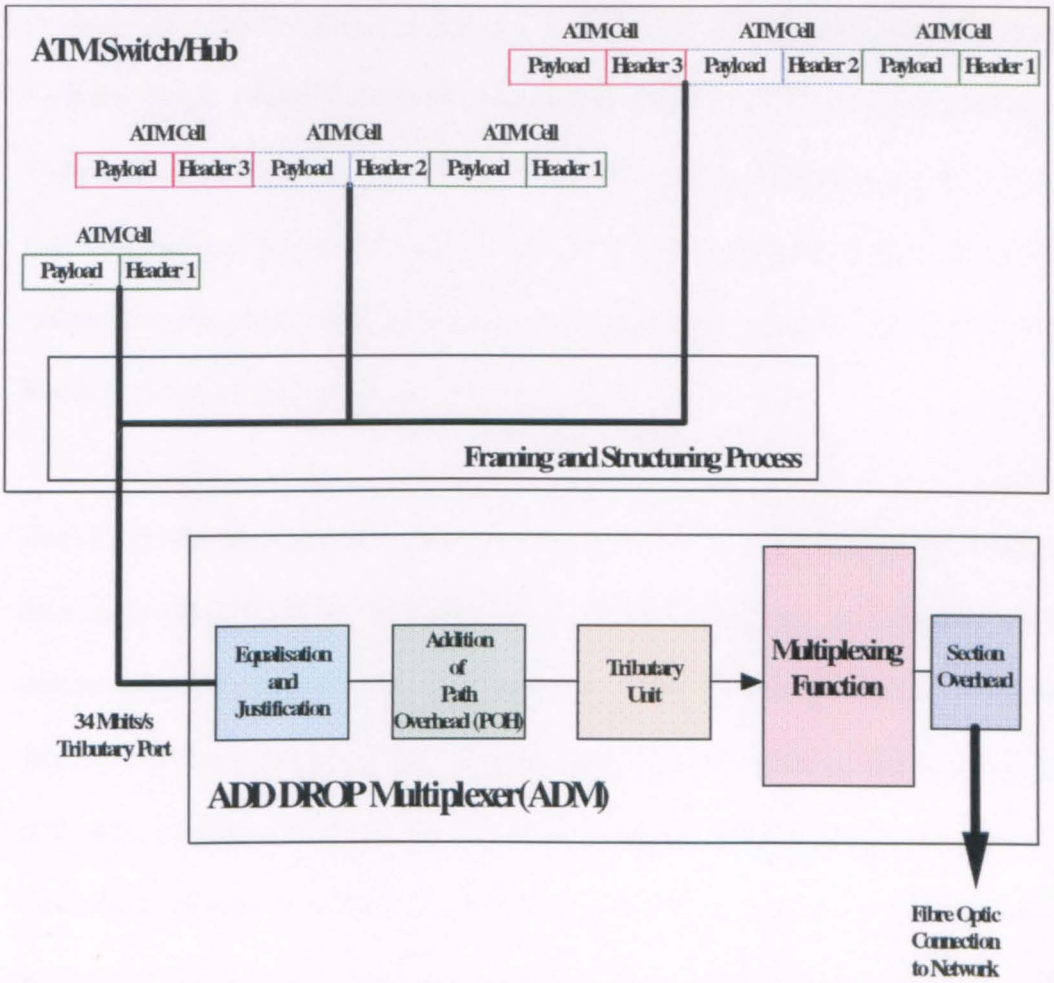

Figure 83 - Processing the Metering Data from the ATM Hub into the SDH frame

Figures 79 to 83 in conjunction with Figures 66, 67 and 68 show the complete mapping process of metering data from the Metering Interface Unit to National Communications network.

7.10.1 Data Throughput of a Remote Meter Reading System Using a Frequency Hopping Power Line Carrier and a Broadband ATM/SDH Network.

In section 3.26 the maximum binary data rate of a band-limited, 2.4kHz, noiseless Power Line Communications Channel was suggested as 4800 bits/s. For the same channel it was also suggested that with a signal to noise ratio of 15 dB, no matter what multi-level signalling system or sampling rate was used, the maximum data rate would be 24 kBits/s. It is beneficial to reconsider these suggestions in

conjunction with the design and application of the proposed Architecture of a Remote Meter Reading System Using Frequency Hopping Power Line Carrier Access Network and an ATM/SDH Transport Network, detailed in Figure 79, but this time in terms of the systems throughput of metering data. Systems throughput is important because it can be used to calculate the efficiency of the Remote Meter Reading Network of Figure 79.

The difference between the 'systems throughput' and the theoretical maximum data rates suggested in section 3.30 has the following relationship to the architecture of Figure 79. The Network Management system controls the flow of data by requesting metering data at given individual times for each customer. This is shown in Figure 79 where the Domestic, Light Industrial and Heavy Industrial Customers transmit data in time intervals t1, t2 and t3 respectively. As detailed in Section 2.3 there could be collisions between these customers individual metering data frames resulting in the colliding metering data frames being destroyed. Due to the possibility of collisions the Metering Interface Unit will verify whether its data frame has been successfully received by the Local Data Collection Centre by listening to the traffic on the Low Voltage Distribution Network. If the frame was destroyed the Metering Interface Unit shall wait for a requisite time interval and then retransmit the metering data. The maximum data rate is not the optimum parameter in this instance. Systems throughput which takes into account retransmissions of metering data frames is of more relevance than a 'pure' transmission rate.

The systems throughput of the architecture in Figure 79 is determined by the Low Voltage Distribution Network Communication channel. The problem of evaluating this throughput, on Low Voltage Distribution Network Local Area

Networks, occurs because of the possible signal propagation delays, as detailed in Section 3.5, that could be present. Delay distortion on the Low Voltage Distribution Network could cause the first bits of a new metering data frame to overlap with the last bits of the previous metering data frame, in which case both frames shall be destroyed and need to be retransmitted. The throughput of the ATM/SDH network is governed by the ATM Hub to SDH channel connection, and as this channel is 'fixed'with data transmitted at rates of 34 and 155 Mbits/s, as shown in Section 6.4, the throughput of the ATM/SDH network can be omitted from any calculations.

A metering data frame shall not suffer a collision if no other metering data frames are sent within one (1) frame interval of its start time as shown in Figure 79. If t_1 is the time required to transmit one metering data frame, and t_0 is transmission commencment time, then if any other Metering Interface Unit generates a data frame within the time frame $t_0 + t_1$ a collision of the metering data frames shall take place as shown in Figure 84.

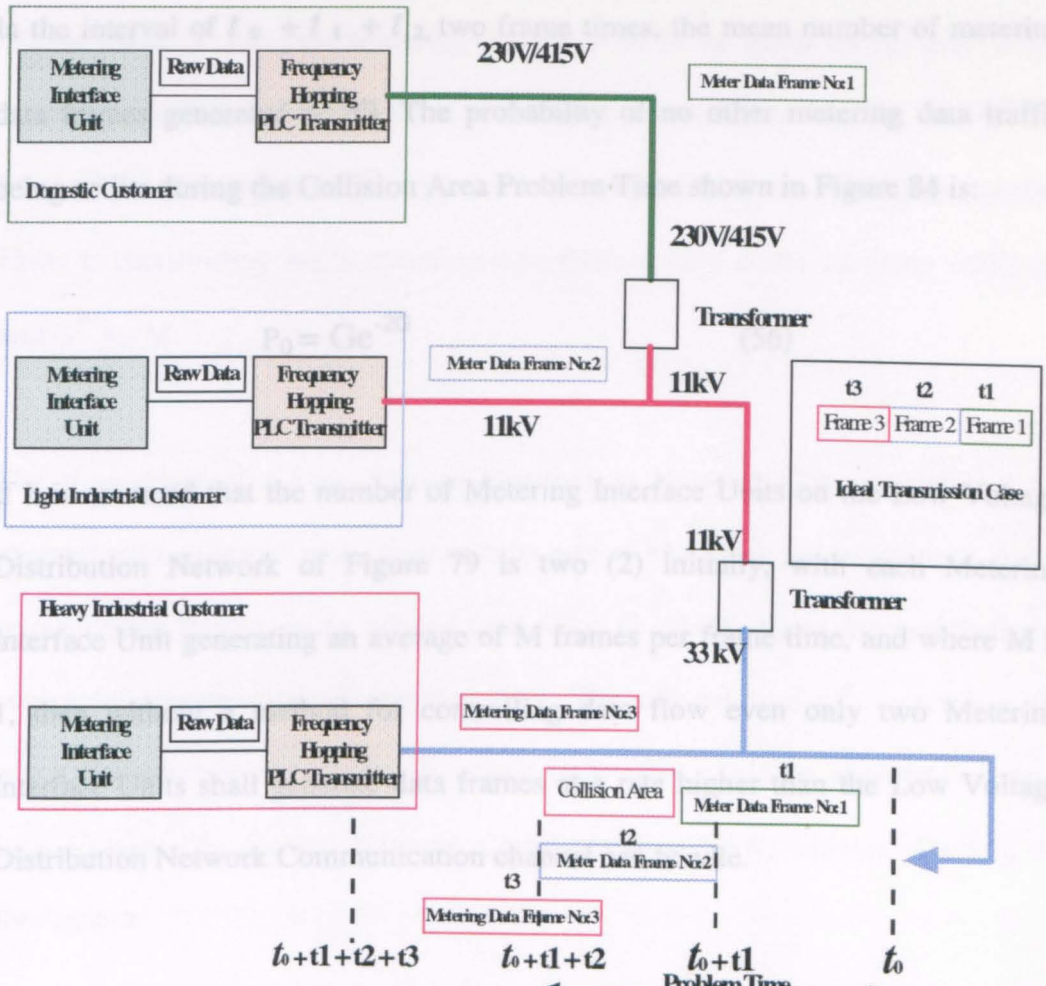

Figure 84 - Collision Period for Metering Data Frames

The probability that k metering data frames shall be generated during a given frame time is given by the Poisson distribution [43]:

$$P_r[k] = G^K e^{-G} / k! \qquad (55)$$

where: G = mean number of frames per frame time

k = transmission attempts per frame time

In the interval of $t_0 + t_1 + t_2$, two frame times, the mean number of metering data frames generated is 2G. The probability of no other metering data traffic being active during the Collision Area Problem Time shown in Figure 84 is:

$$P_0 = Ge^{-2G} \qquad (56)$$

If it is assumed that the number of Metering Interface Units on the Low Voltage Distribution Network of Figure 79 is two (2) initially, with each Metering Interface Unit generating an average of M frames per frame time, and where M > 1, then without a method for controlling data flow even only two Metering Interface Units shall generate data frames at a rate higher than the Low Voltage Distribution Network Communication channel can handle.

Each of the Metering Interface Units can also be expected to generate new frames if a collision caused by delays is detected. If M was the initial average of transmitted frames per frame time, and R the initial average of retransmitted frames, per frame time, then G^R from equations 55 and 56 must now equal M + R, where G^R is the new mean number of original transmitted, and retransmitted metering data frames. G^R must be greater than M for all conditions where M is given by the equation:

$$M = GP_0 \qquad (57)$$

where: P_0 is the probability that the metering data frame does not suffer a collision.

Where each of the two Metering Interface Units is transmitting only a few metering data frames, then the risk of retransmission shall be smaller, and G^R and M shall be almost equal. At high loads where each of two Metering Interface Units is transmitting many metering data frames there could be many collisions and $G^R >> M$.

The throughput of a Low Voltage Distribution Network Communication LAN channel with an initial mean transmission rate of M frames per frame time, and R retransmitted frames, is the offered load, $G^R = G\ (M+R)$, times the probability of successful transmission of metering data. The offered load G^R determines the maximum number of Metering Interface Units that could be implemented on a Low Voltage Distribution Network Communication LAN, without affecting the throughput.

In section 2.6 it was proposed to use the IEEE 802.3 Carrier Sense Multiple Access/Collision Detection 1-persistence protocol for a Low Voltage Distribution Network LAN, such as shown in Figure 79. The efficiency of this protocol affects the systems throughput, and ultimately the maximum number of Metering Interface Units that can be implemented on the Low Voltage Distribution Network LAN in Figure 79. The throughput is also dependent on how long it shall take the Local and Central Data Collection Centre Management system of the Local REC/Second Tier Agent or Primary Supplier to realise there has been a collision of metering data frames and react to it. Consider the case where the two Metering Interface Units on the Low Voltage Distribution Network, are the Customer Premises equipment at one extremity of the network and the Local Data Collection Centre at the other extremity, as shown in Figure 79.

Let the time for the Frequency Hopping Power Line Carrier signal, containing metering data transmitted from the Domestic Customer, to propagate through the Low Voltage Distribution Network to the Local Data Collection Centre be t. At t_0 the Metering Interface Unit of the Domestic Customer commences transmitting metering data. At $t - \alpha$, a short time before the metering data from the Domestic Customer arrives at the Local Data Collection Centre, the same Local Data Collection Centre itself commences to transmit metering data, for example pertaining to a tariff change for all customers, to all Metering Interface Units. The Local Data Collection Centre detects the collision almost instantly and stops transmitting but the collision is not detected by the Domestic Customers Metering Interface Unit for a minimum time of $2t - \alpha$, the time for the noise burst caused by the collision to propagate back through the Low Voltage Distribution Network.

Assume there are now N Metering Interface Units, instead of two, on the Low Voltage Distribution Network. Each Metering Interface Unit transmits during a contention slot, where a contention slot is defined as a period where other Metering Interface Units could also transmit, with probability P. The probability, S, that another Metering Interface Unit will actually transmit during the same contention slot is given by:

$$S = N P (1 - P)^{N-1} \qquad (58)$$

S is optimised when P = 1/N, and S assumes a $1/e$ distribution characteristic, where e is the exponential function, when the number of Metering Interface Units, N, increases.

The probability, E, that a contention interval, where a contention interval is a number of contiguous contention slots, has exactly k slots in it is derived from equation 58 as:

$$E = S\,(1 - S)^{k-1} \qquad (59)$$

and therefore the mean number of slots per contention is derived from equation 59 as:

$$1/S = \sum_{0}^{\infty} k\,S\,(1 - S)^{k-1} \qquad (60)$$

Since each contention slot, as shown in Figure 84, has a duration of $2t$, the mean contention interval, T , is derived from equation 60 as:

$$T = 2t / S \qquad (61)$$

Assuming optimum probability P from equation 57 and that the mean number of contention slots is never more than e , then the mean contention interval can never be longer than $2t\ e$, or 5.4 t since when $x = 1$, $e^x = 2.718$. If the mean metering data frame takes τ seconds to transmit then when many Metering Interface Units have frames to transmit the efficiency of a IEEE 802.3 Carrier Sense Multiple Access/Collision Detection for a Low Voltage Distribution Network LAN using a 1-persistence protocol can be given by:

$$\text{Channel Efficiency} = \tau / (\tau + 2t / S) \qquad (62)$$

From equation 62 it can be seen why the distance from a Customers Metering Interface Unit to the Local Data Collection Centre is important and why it was proposed in section 7.3 that the installation of Power Line Carrier Repeaters requires careful planning. The longer the physical Low Voltage Distribution Network communication channel, and the more repeaters that are installed, the longer the propagation delays and subsequently the longer the contention interval and the more risk of collisions.

If the distance and subsequently the maximum round trip time between the most distant Metering Interface Unit and the Local Data Collection Centre, the number of Metering Interface Units, and the maximum number of repeaters is restricted the overall efficiency of the Low Voltage Distribution Network communication channel shall increase.

From equation 62 in terms of the metering data frame length, L, the Low Voltage Distribution Network Channel Bandwidth, B, and the distance from the Metering Interface Unit to the Local Data Collection Centre, D, the speed of signal propagation, V, and the optimal case of e contention slots per frame then, since $\tau = L / B$, the efficiency of the Low Voltage Distribution Network Communication channel is given by:

$$\text{PLC Channel Efficiency} = 1 / (1 + 2BD\, e / VL) \qquad (63)$$

For example assume a metering data frame of length, L = 48 bytes (384 bits), as suggested in section 2.8, a distance, D, of 2500 metres from the customers premises to the local data collection point on the Low Voltage Distribution Network, and a bandwidth, B, of 2400 Hz , as suggested in section 3.11, equates to an efficiency:

$$1/1 + 2.2400.2500.2.718/384.300.10^6 = 1/1 + 0.000283 = 99.97\% \qquad (63.1)$$

The same system but with a bandwidth, B, of 30,000 Hz has an efficiency:

$$1/1 + 2.30000.2500.2.718/384.300.10^6 = 1/1 + 0.0353 = 99.64\% \qquad (63.2)$$

Note: It is unlikely the speed of propagation through a power line would be 300.10^6, due to the propagation delays, but since the same figure is used in 63.1 and 63.2 the equation results are valid.

From equation 63.2 it can be seen that increasing the Power Line Channel bandwidth for a given frame size, such as suggested in section 2.3, could actually result in a decrease in efficiency and subsequently a decrease in metering data throughput.

7.10.2 The Provision of Value Added Services in a Remote Meter Reading Communications Network

In sections 1.1.7 and 6.2 it was suggested that to take full advantage of the opportunities arising in the Electricity Supply Industry and other utility energy supply industries an Integrated Remote Metering Communication and Information Systems infrastructure must be in place. To decrease the potential impact of the possible high cost the development of such a network could incur it is feasible that

additional Value Added Services may need to be provided by the user. These Value Added Services could include the provision of telephony, security monitoring, video and other telecommunications services. The architecture detailed in Figure 79 and described in sections 7.10 and 7.10.1 provides the foundations for providing such Value Added Services.

The use of an ATM/SDH architecture for the transport network of a Remote Meter Reading system allows the ATM cells, at the ATM hub, to be switched in accordance with information in the cell header and not on the basis of a fixed transmission time slot. This technique not only allows bandwidths in excess of 2 Mbits/s to be switched but means the circuit provider can provide a flexible allocation of other data rates. The ATM/SDH elements of Figure 79, shall allow Value Added Services such as high definition video services (video conferencing as well as TV type video), telephony (both voice and wideband area interconnect), and computer graphics to be flexibly transferred across the network.

The network capabilities of a Power Line Carrier Communication Channel cannot at this time carry many of the Value Added Services detailed due to the bandwidth restrictions shown in Section 3.2.1. However due to the virtual monopoly of the existing PTOs on the Customer Access Network, as shown in Section 1.3, Power Line Carrier with the correct modulation method and communication infrastructure could offer a means of providing some of the Value Added Services like basic telephony, security monitoring, and slow speed data channels. Although the provision of the larger bandwidth Value Added Services are not feasible using a Low Voltage Distribution Network at this time, given the advances in high level modulation techniques, described in Section 3.25, data rates that could be communicated on a Power Line Communication Channel could be increased.

Figure 79 provides a systems architecture that meets the main objective of this research by providing a design and application for Power Line Carrier Communication and Remote Meter Reading for use in Integrated Services and Broadband Integrated Services Digital Networks which could be used in a potential market of 23 million customers.

7.11 A NETWORK MANAGEMENT AND OPERATIONAL SUPPORT SYSTEM FOR REMOTE METER READING

The provision of a Network Management Operational and Support System (NMOSS) is of prime importance in the development of a Remote Meter Reading system. The development of such systems however is extremely complex. For example the Croeso system [135] is under development with the potential to produce bills for customers of South Western Electricity, Southern Water and the newly merged Welsh Water and South Wales Electricity. Projects like Croeso are a major undertaking for RECs and require a great deal of planning, as any large complex computer project can be subject to delays. A Network Management Operational and Support System (NMOSS) must, as far as practicable, automate the processes and procedures used to provide Remote Metering and any associated services to customers. It should not be intended only as a tool for the management of the Billing Data Collection elements of the Remote Metering system although this must be a major task of the system. The design of a Network Management Operational and Support System (NMOSS) needs to be viewed from a number of perspectives. These perspectives are needed in order to form a framework of the physical, logical, functional, interface and data functions which could be used in the planning of a suitable NMOSS for Remote Meter Reading. The ultimate object of this planning process is the Detailed Design of an NMOSS for a Remote Meter Reading system which can be adapted to the needs of any Utility company

7.12 Design Overview/Framework of a Proposed Remote Meter Reading Network Management and Operational Support System.

It is proposed to implement a Network Management and Operations and Support System (NMOSS) for Remote Meter Reading based on a Network Management Forum (NMF) 5-layer architecture of Business Management/Service Management/Network Management/ Element Management and Network Element. Figure 85 illustrates the proposed architecture and indicates where each of the functional components could reside in a Remote Meter Reading Business/ Service/ Network/Element hierarchy.

7.13 Detailed Design of the Remote Meter Reading NMOSS System

The proposed components of the Remote Meter Reading NMOSS shown in Figure 85 can be described from both a logical and physical perspective.

7.13.1 Physical Perspective

The physical design of the NMOSS, the proposed physical components and a possible method of interconnection are shown in Figure 86.

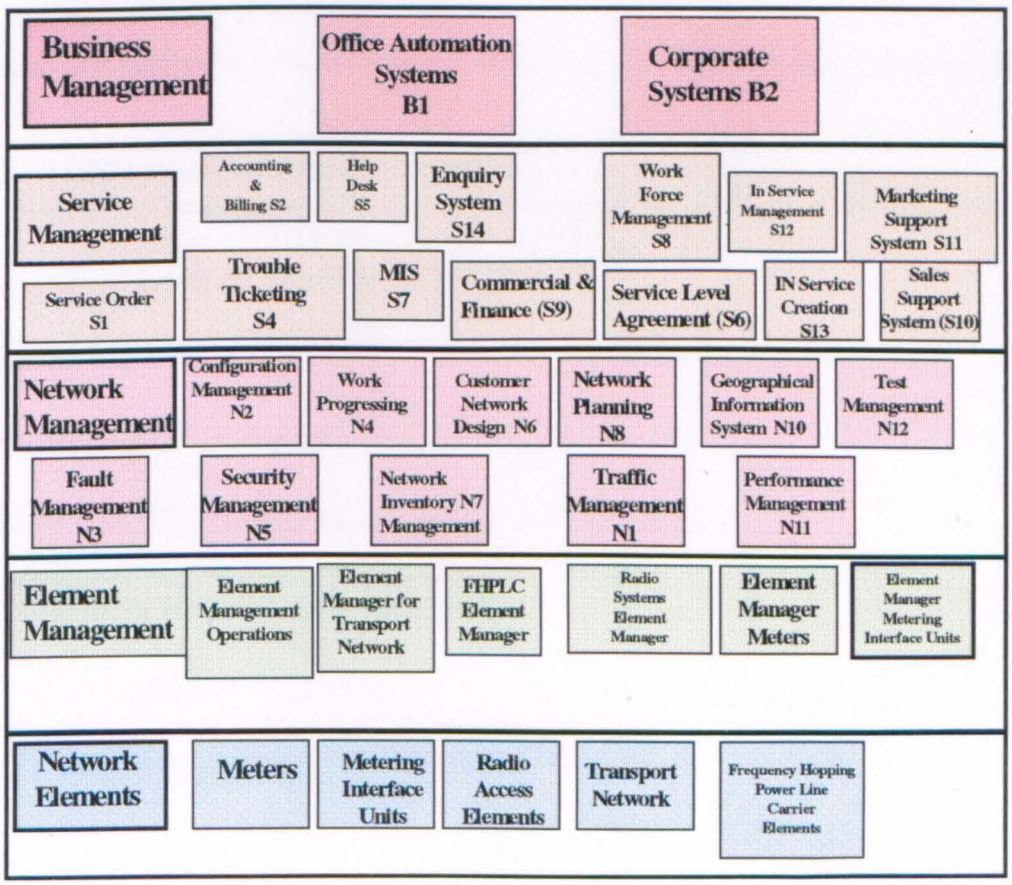

Figure 85 - Proposed Remote Meter Reading NMOSS Hierarchy

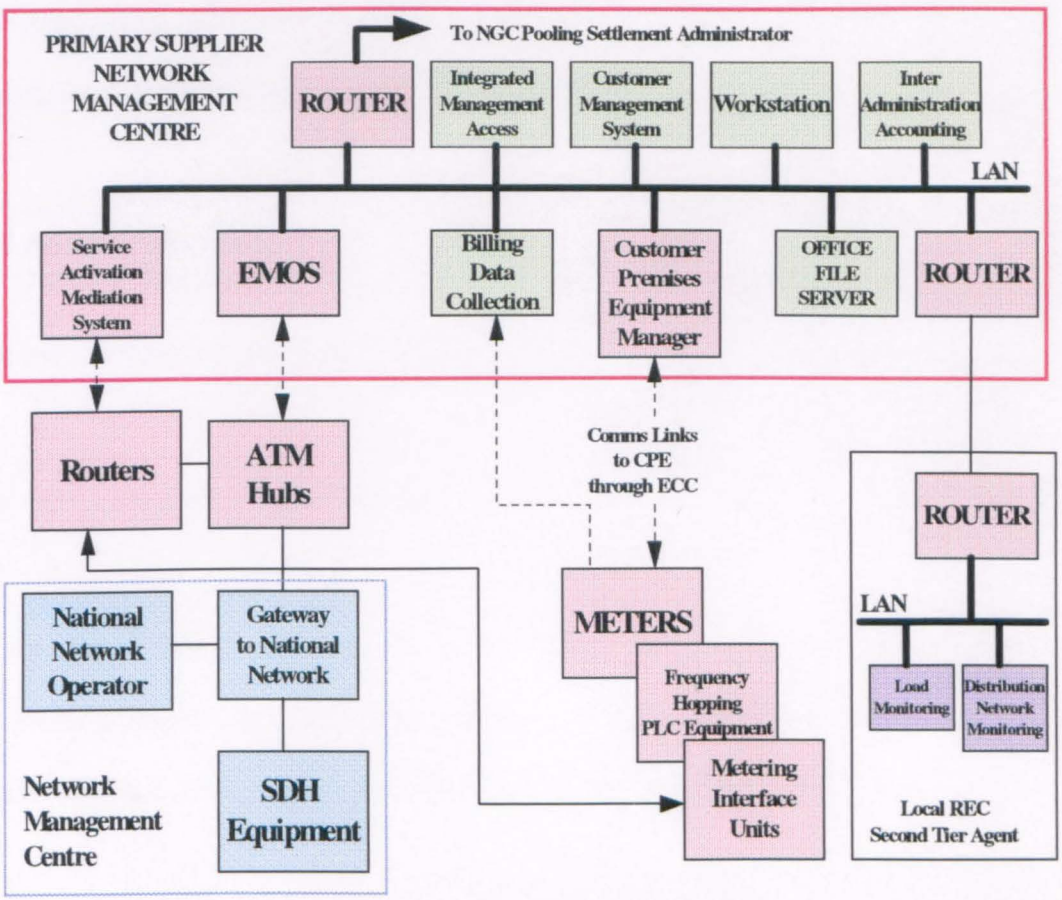

Figure 86 - Proposed Remote Meter Reading NMOSS Physical Components

7.14 A Customer Management System

A Customer Management System will be required to fulfil the following service management functions identified in Figure 85.

- Service Order (S1)
- Accounting and Billing (S2)
- Help Desk (S5), Trouble Ticketing (S4) and Job Tracking
- Management Information System (MIS)
- Work Force Management (S8)
- Commercial/Finance (S9)
- Enquiry System (S14)

- Service Level Agreements (S6)

The designation Sx indicates the proposed service management functions, identified in Figure 85, that should form part of the NMOSS system.

7.15 Billing Data Collection

The Billing Data Collection system should fulfil the following service management function identified in Figure 85.

Inter Administrative Accounting (S3)

Billing Data Collection collects information on Customer Consumption, Electricity supplied from the pool, and the use of the Local RECs Low Voltage Distribution Network in order that accurate invoices can be prepared.

7.16 The Workstations

The workstations should provided the technical users of the Local REC/Second Tier Agent, and the Primary Supplier, with the ability to access all of the management systems on the Low Voltage Distribution Network.

7.17 File Server System

The File Server system should provide the standard office suite functionality used by the Prime Supplier or the Local REC/Second Tier Agent (e.g. MS-Office, Lotus Organiser) and office application data storage.

7.18 The Service Activation Mediation System (SAM)

The SAM system shall provide mediation between the Customer Management System and the interfaces of the Power Line Carrier Communication and Remote Meter Reading for use in Integrated Services and Broadband Integrated Services

Digital Network shown in Figure 79 of section 7.10 for the provision of Electricity and Value Added Services.

7.19 Front Office User Workstations

The front user workstations should enable customer interfacing staff to access the Customer Management System for sales, bills and other administration enquiries.

7.20 Logical Design of a Remote Meter Reading NMOSS

The functionality of the NMOSS components discussed in section 7.14 to 7.19 that are used in the management of the Power Line Carrier Communication and Remote Meter Reading for use in Integrated Services and Broadband Integrated Services Digital Networks are.

7.20.1 Bill Data Collection (BDC)

The Bill Data Collection component should receive Consumption Data Records (CDRs) from the Customer Management System and:

a. Reformat the CDRs into the standard Format used by the Local REC/Second Tier Agent or primary supplier.

b. Archive the CDRs

c. Provide Quality Checking and request for retransmission in the case of errors.

7.20.2 Bill Printing Service (BPS)

It may be relevant for the Local REC or Primary Supplier to consider whether this component shall be provided by the Local REC or Primary Suppliers themselves or by using an external Bill Printing agency. It should enable electronic records to

be accepted (via either wire or tape transfer) to produce and mail hard-copy customer bills on a regular or one-off basis.

7.20.3 Equipment Manager -Operations System (EMOS)

This component should provide element management for the Local REC or Primary Supplier of the range of Network Communication Elements in a Power Line Carrier Communication and Remote Meter Reading for use in Integrated Services and Broadband Integrated Services Digital Networks. Functions shall include Fault Management, Configuration Management, some Performance Management and Security. This function may be partially carried out by a PTO if a National Broadband Integrated Services Digital Networks is used as is suggested in section 6.2.

7.20.4 Inter Administration Accounting (IAA)

This component should use some form of supply metering at the Bulk Supply Point(s) of the National Grid to monitor the supply provided under the Pooling and Settlement Arrangement and the use of the Local REC or Second Tier Agents distribution network.

7.20.5 Integrated Management Access

This component should provide a "Reach Through" enabling "front end " integration onto a single windowed user interface of all the individual management platforms of the Remote Meter Reading NMOSS to allow the individual management components detailed in 7.20.1 to 7.20.3 to be managed from one common hardware platform or work station.

7.21 Interfaces

Three kinds of interfaces will generally need to be implemented in a Remote Meter Reading NMOSS. The possible interfaces are:

- User Interfaces (Graphical and Voice Terminals)

- Functional Interfaces (Internal)

- Functional Interfaces (External)

7.21.1 User Interfaces

Two types of user interface shall be normally required. Technical User Interfaces which shall be used by the Local REC or Primary Supplier who shall have primary access to the EMOS system, and Front Office User Workstations with connection to the Customer Management System. It is expected that all connections between the components applications host platforms and the GUI terminals will be made by means of LAN and/or WAN interconnections. A further requirement shall be that all main interfaces are available on a single windowed terminal as proposed in section 7.20.5.

7.21.2 Voice Terminals

It may be necessary for the Primary Supplier to set up or use an existing number of "customer centres" in the Local REC/Second Tier Agents boundary area as an integral part of the Remote Meter Reading Customer Service. These customer centres should be supported by incoming and outgoing Automatic Call Distribution probably based on a small PBX or desk top system. Calls need to be presented to operators using the Customer Management System via some form of voice interface and telephone terminal.

7.21.3 Internal Interfaces

The following can be envisaged as the main internal interfaces of the Prime Supplier:

Billing Data Collection to Inter Administration Accounting (For Second Tier Supply System)

Billing Data Collection to Customer Management System

Service Activation Mediation to Communications Network

7.21.4 External Interfaces

The following can be envisaged as the main external interfaces of the Prime Supplier:

Customer Management System to Bill Printing service

Inter Administration Accounting System to Print Agency.

A Remote Meter Reading system must not only provide a suitable communications medium, protocols and metering devices, but suitable management and control of these elements and intrinsic links to fault processing, accounting, administration, sales and marketing, and inventory functions in order to provide a comprehensive system. Such a Network Management and Operations Support Systems (NMOSS) as shown in Figures 85 and 86 should assist in providing increased quality of service levels, planning, costing and statistical information, as proposed in section 1.1.7, which shall be associated with the development, maintenance and engineering of any Remote Meter Reading system.

The functions of a Remote Meter Reading Network Management and Operational Support System detailed in Figures 85 and 86 could be interlinked as shown in the high level data model of Figure 87.

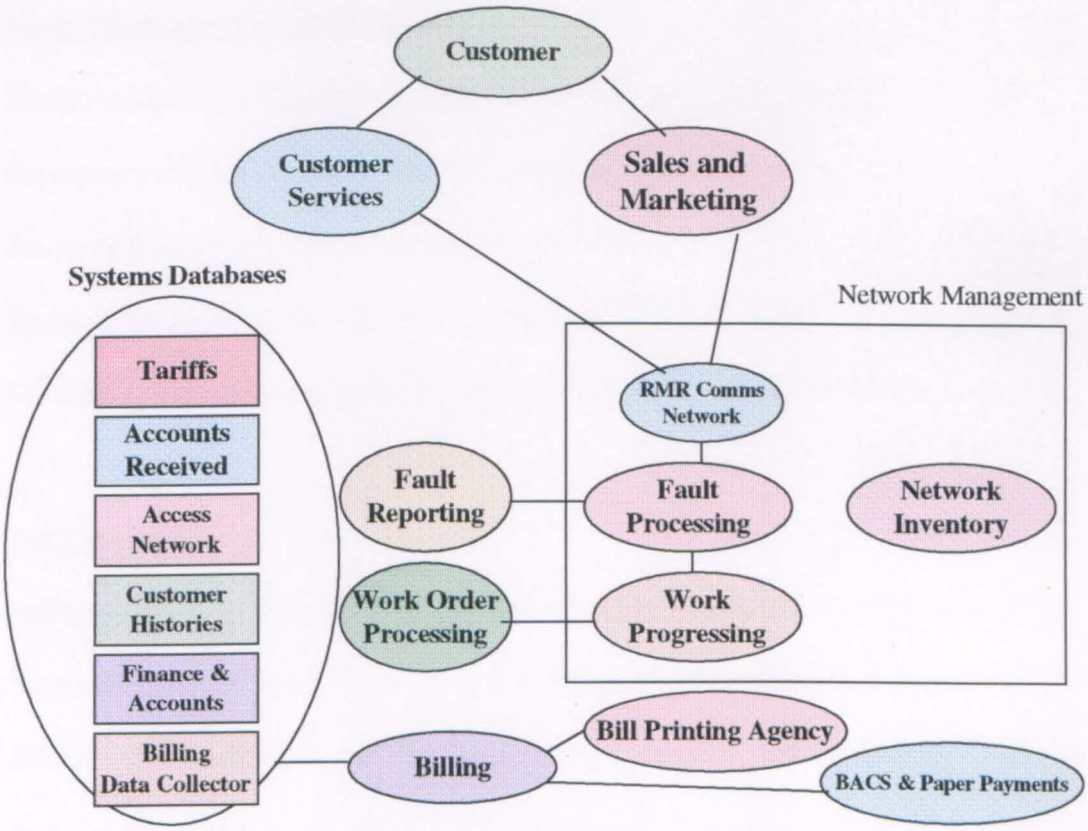

Figure 87 - Remote Meter Reading NMOSS High Level Data Model

Network Management

Included in the interlinking Network Management functions of Figure 87 must be the ability to configure the Remote Meter Reading system Customer Access Network. This must include the ability to exercise control over the features of the Frequency Hopping Power Line Carrier system such as Word of Day, Time of Day, detailed in section 7.8.1. This must also include the ability to allocate Customer Access Points, the Low Voltage Distribution Network and Broadband ISDN interfaces at the Local Data Collection Centres, shown in Figure 79, and set up Remote Meter Reading Traffic paths from the Customers Premises to the

designated Local Data Collection Centre and from the Local Data Collection centre to the Local REC or Primary Supplier for the routing of metering data.

Fault Management and Processing

Fault management detailed in Figure 87 should incorporate a set of interlinking functions enabling the detection, isolation and correction of faults not only in the Network Communication Elements in a Power Line Carrier Communication and Remote Meter Reading for use in Integrated Services and Broadband Integrated Services Digital Networks but also at the meter itself and its environment.

Performance

Performance management functions detailed in Figure 87 shall allow not only the measurement and availability of the Electricity Supply service provided but be able to validate performance trends across the Network Communication Elements in a Power Line Carrier Communication and Remote Meter Reading for use in Integrated Services and Broadband Integrated Services Digital Networks, over a period of time, and if any degradation of performance in these elements is apparent, highlight the necessity of maintenance.

Security

Security functions in Figure 87 must be designed to prevent unauthorised access to both meters and the interconnecting Network Communication Elements in a Power Line Carrier Communication and Remote Meter Reading for use in Integrated Services and Broadband Integrated Services Digital Network and prevent attempts to interfere with metering data as discussed in section 7.8.1

Communications Interfaces

Included in this function category must be the ability to monitor and review the communications interfaces Network Communication Elements in a Power Line Carrier Communication and Remote Meter Reading for use in Integrated Services and Broadband Integrated Services Digital Networks or other communications interfaces used for the transportation of remote metering data.

Administration

The administration tasks of the Local REC/Second Tier Agent should be interlinked for example the billing, tariff setting, database and log services (including archiving of customer histories) should be linked to word processing to enable the incorporation of Billing Data into letters to customers for example.

7.22 Conclusions

This chapter has detailed a number of important research areas relating to a Generic Communication and Network Management System for Remote Meter Reading. The advent of a second tier supply system means metering and associated information may need to be provided to the prime electricity supplier, who theoretically could be located anywhere within the United Kingdom, as well as the Local REC/Second Tier Agent who may physically supply the electricity. Since the cost of the local loop is nearly always the most expensive part of any national communications network to implement, extensive research into the use and data throughput of a Low Voltage Distribution LAN for the Customer Access Network and an ATM/SDH Transport Network of one of the existing or new PTOs, at a readily available interface point, has resulted in section 7.10 in a proposed Architecture of a Remote Meter Reading System Using Frequency

Hopping Power Line Carrier Access Network and ATM/SDH Transport Network for a Remote Meter Reading Communications Network as shown in Figure 79.

Methods are shown for successfully transmitting and receiving metering data from a Customer's premises to the Prime Supplier and Local REC, using repeaters where necessary to overcome any areas of high attenuation or noise, on a power line. For connecting the necessary metering or associated transmission/reception device to a power line, inductive coupling to the phase-neutral combination is concluded as being the safest and technically the optimum configuration, although earth-neutral and phase-earth combinations are also detailed.

The provision of Value Added Services which could reduce the cost of providing Remote Metering Communication are detailed in section 7.10.1 and are also included in the proposed Architecture of a Remote Meter Reading System Using Frequency Hopping Power Line Carrier Access Network and ATM/SDH Transport Network for a Remote Meter Reading Communications Network as shown in Figure 79.

Section 7.11 researches the management of both meter related elements, for example the actual metering device itself, or the communications elements described in Figure 79, the frequency hopping power line carrier transmission/reception systems, ATM Hubs, SDH multiplexers, and the associated elements like filters in an information processing application which is as important as the 'gathering' of 'pure' metering data. Because of its very nature the management of a Remote Meter Reading system is distributed and therefore its network management is a distributed application. For the non metering devices, the 'true' communication devices, in ITU terminology, this management involves

the exchange of information between separate management processes which are termed "function blocks". For metering related devices, as shown in Chapter 2, these functional blocks are described as Virtual Distribution Equipments (VDEs), with each VDE representing one function of the metering device. For the succesful implementation of a Remote Metering system paragraphs 7.11 to 7.21 conclude that monitoring and controlling of both the Virtual Distribution Equipments (VDEs) and the 'functional blocks' of the communication and associated elements should be implemented by a common Network Management and Operational Support System so that the interaction of the function blocks and VDEs shares a common view or understanding of information such as supported protocol capabilities or management functions

Chapter 8 - Conclusion and Future Work

8.1 Objective

The main objective of this research was an investigation into the design and application of Power Line Carrier Communication and Remote Meter Reading for use in Integrated Services and Broadband - Integrated Services Digital Networks which could be used in a potential market of 23 million domestic and industrial customers. It is concluded as a result of the findings obtained in Chapters 2, 3, 4, 5, 6 and 7 that this objective was achieved, resulting in detailed proposals for the Architecture of a Remote Meter Reading System using a Frequency Hopping Power Line Carrier Access Network and ATM/SDH Transport Network, as shown in Chapter 7 section 7.10, and a Network Management and Operational Support System, as shown in Chapter 7, Sections 7.11 to 7.21. Further conclusions resulting from the research detailed in Chapters 2, 3, 4, 5, 6 and 7 are included in sections 8.2 to 8.7.

8.2 Data and Communication Network Protocols

It was shown in Chapter 2 that there are a number of protocol options available to any REC who wishes to implement a Power Line Carrier Remote Metering system on the Low Voltage Distribution Network. Sections 2.1 and 2.2 detail the research into protocols such as the Distribution Line Message Specification (DLMS), and the work of CENELEC SC205A WG2 in this area. As a result of this research detailed proposals are put forward in section 2.3, of a protocol architecture suitable for a Second Tier Supply and Wide Area Network Remote Meter Reading System and which include the concept of a Totally Managed Remote Meter Communications Network shown in section 2.3.1.

8.3 Modulation Systems for Low Voltage Communications

In Chapter 3 an analysis of Low Voltage Signalling systems is detailed. As a result of the analysis a method is proposed, in section 3.23, which permits the evaluation and comparison of such Low Voltage Signalling systems. The model includes the effect of one Low Voltage Signalling system on another, and establishes a common Figure of Merit, the Propagation Loss. It is concluded as a result of the research in Chapter 3 that Frequency Hopping Low Voltage Spread Spectrum Signalling systems are more suited to the Low Voltage Distribution Network than other signalling systems, such as ASK and FSK, but that it is also possible for these systems to share the same Low Voltage Distribution Network, and minimise bit error rates, by maximising the hopset and minimising the Dwell Time, and therefore the mean rate of occurrences of any particular frequency, of the Frequency Hopping Low Voltage Spread Spectrum Signalling system.

8.4 Power Line Carrier (PLC) and Radio Communication Systems

Research was carried out in Chapter 4 into the practical design of Power Line Carrier and Radio Communication Systems that could be used in Remote Meter Reading. The research findings in sections 4.7, 4.8, 4.9, 4.10 and 4.11 of Chapter 4 indicate that the new cellular radio technologies, such as GSM, and wireless local loop systems offer great potential for radio based remote metering schemes. The findings also suggest that if already available, and many of the schemes discussed are available through third party providers, then the infrastructure of a radio metering scheme using these new technologies could be more technically, and cost effective, than other radio metering schemes which are based on the bandwidth of 183.5 Mhz to 184.5 Mhz presently allocated to Low Power Radio and Metering applications by the Department Of Trade and Industry (DTI).

8.5 ISDN: An Alternative to Power Line Carrier and Radio Remote Meter Reading Systems

Telephone networks, and particularly the use of Integrated Services Digital Networks, have been proposed as a main communications media for Remote Meter Reading Systems. The research results shown in Chapter 5 reveals how these networks are technically achievable, but correspondingly shows that the disadvantages, and in particular those related to using Basic Rate and Primary Rate ISDN, are the current high cost of tariffs and the unavailability of an ISDN service in many areas of the United Kingdom. The forecasts for the deployment of Basic Rate and Primary Rate ISDN to be deployed in the United Kingdom in 1997, one year before full deregulation of the Electricity Industry takes place, is further shown by the research results to be completely inadequate to provide a potential customer base of 23 million customers with Remote Metering Communications.

8.6 An Architecture for Remote Communications Systems

Present Remote Communications for meter reading usually work on the premise of a Power Line Carrier/Radio/Telephone Line system carrying metering data to a local collection point, then using radio, the PSTN or some other telecommunications system to carry the data to a central collection point. The research findings in Chapter 6 show that new technology and services introduced as a direct result of the deregulation of the United Kingdom telecommunications services have rendered many of these architectures incomplete and outdated. The research shows why the impact of these new technologies, and in particular the use of Asynchronous Transfer Mode (ATM) in conjunction with the Broadband ISDN capabilities of the Synchronous Digital Hierarchy Transport Networks of the new licensed Public Telephone and Private Network Operators, is a significant factor for recommending its use for networking across the potentially wide areas of a communications network for the transmission of metering data. An Asynchronous

Transfer Mode (ATM)/Synchronous Digital Hierarchy Transport Network as, shown in sections 6.5 and 6.6 of Chapter 6, has both the technical capability and tariffing structure to provide integration of other Value Added Services with Remote Metering Data to make a Remote Meter Reading network economically viable.

8.7 A Generic Communication and Network Management System

Chapter 7, by building on the findings of Chapters 1 to 6, concludes that although Power Line Carrier and Broadband ISDN are two diverse communications technologies, the design and application of Power Line Carrier Communication and Remote Meter Reading for use in Integrated Services and Broadband - Integrated Services Digital Networks could be realised, to reach a potential market of 23 million domestic and industrial customers. It is unlikely however that this architecture could be realised in time for the first phase of full deregulation of the United Kingdom ESI, the 1 April 1998. The research findings show how the architecture could be achieved, in Chapter 7 section 7.10, in conjunction with a suitable Network Management and Operational Support System, detailed in section 7.11 to 7.21, to provide a Generic Communication and Network Management System for Remote Meter Reading.

8.8 Future Work

Enhancements to the main objective of this research, the design and application of Power Line Carrier Communication and Remote Meter Reading for use in Integrated Services and Broadband - Integrated Services Digital Networks, could be achieved by further work on:

- **Electro-Magnetic Compatability(EMC)**

The development of Power Line Carrier Communications is very much in its infancy compared to other communications technologies, for example radio. This development cannot proceed in an isolated manner relating purely to

communications technology however and a detailed Electro-Magnetic Compatability analysis is required not only to evaluate the effects of other communications systems sharing the same power line, as detailed in Chapter 3, but also on external communications systems outside the Low Voltage Distribution Network. Such future work should incorporate an analysis relevant to the new EMC standards now being produced by the ITU, IEC, CENELEC and other bodies.

- **Network Build and Test**

The research carried out has examined the theoretical aspects of the design and application of Power Line Carrier Communication and Remote Meter Reading for use in Integrated Services and Broadband - Integrated Services Digital Networks Further work should include the building, testing and practical evaluation of a network as proposed in this thesis.

- **Filtering.**

A Power Line Carrier system is of fundamental economic importance to the Regional Electricity Companies as a communications medium for Remote Meter Reading and other Value Added Services. Further research into the detailed specification of mains filters for the Low Voltage Distribution Network could enhance the design and application of the Customer Access Network of a Power Line Carrier Communication and Remote Meter Reading for use in Integrated Services and Broadband - Integrated Services Digital Networks by allowing the Low Voltage Distribution Network to be shared with these Value Added Services.

REFERENCES

1. Meter Power	DETTMER IEE REVIEW June 1992
2. Utilities and Two Way Customer Communication Systems	D. C. YEUNG, F.ALLEN MORGAN IEEE Communications Magazine April 1995
3. Working on a Neat Meter	T. DAWN Electrical Review 13 to 26 May 1994
4. Meterlink	K.Welsby, J.Adams and J.Deslandes BTE, Vol.15 July 1996
5. Public Utilities Viable Ways to Read a Meter from Afar	Computing the Magazine 4 October 1984
6. Communication in a Deregulated Environment	Dr. J. Newbury Open University AMRA Symposium September 10-13 1995
7. The TANGENT Scheme	Schlumberger Ind Date 1989
8. The TEDRA Scheme	Schlumberger Ind Date 1989
9. The London Electricity 2000 Unit Pilot Scheme	D.J.BILLINGTON Thorn EMI Electronics Ltd MATES 1992

10. Upwards to a Reliable Bi-Directional Communications Link on the LV Power Supplies for Utility Services: Field Tests in Belgium

W.R. De WILDE and D.VAN WASSENHOVE
Vynckier N.V Belgium
1992

11. Two Way Distribution Line Carrier Technology for Remote Meter Reading and Controlling Dynamic Tariffs: Field Experiments

T.SALO, P. EEROLA
Enermet Finland
19-21 June 1992

12. Distribution Automation System to Provide Friendly Home User-Utility Interface

G. CASA,
P. MIRANDOLA
ENEL (Milan)
Transmission&Distribution International
December 1992

13. Digital Line of Sight Radio Links

A.A.R.Townsend
Prentice Hall 1988

14. Communication Systems Requirements for Implementation of Large Scale Demand Side Management and Distribution Automation

D.MAK,
D. RADFORD
Distribution Control Systems
IEEE Transac July 1994

15. Mains Signalling

Electronics and Wireless World June 1990

16. Deterministic and Probabilistic Studies of Power Line Carrier Channel

Professor CS Indulkar
I.E. (I) Journal
Volume 73
November 1992

17. Experimental Verification of Distribution Feeder PLC Propagation Model Computations

C.A. STRUTT,
W.C HUGHES
and R.C RUSTAY
IEEE Transactions on Power Delivery,Volume 9,
January 1994

18. X.25 EXPLAINED, protocols for packet switching networks — R.J.DEASINGTON, J.Wiley &Sons 1989

19. Results of a Comprehensive Field Trial of a United Kingdom Telemetry System Using Mainsborne Signalling — B.E.Eyre, Paper 9.2, Mainsborne Telecontrol Customer TelemetryTrials 1984 - 1985

20. Equipment Designs for a Two Way Mainsborne Signalling System of Energy Management — N.R CHAPMAN, B.E EYRE, S.J GOODWIN, A. WEINER, MATES 1983

21. Remote Meter Reading and Control Using High Performance PLC Communications over the Low Voltage and Medium Voltage Distribution Networks — C.NUNN, P.M MOORE, P.N WILLIAMS, 1992

22. Power Line Carrier Technology Revolutionises Remote Metering — C.NUNN, Electro Technology, June/July 1994

23. Power Line Carrier as a Communications Medium for Remote Metering — C.NUNN, IEE 1994

24. Mains Signalling - Progress of a U.K Remote Meter Reading and Load Management System — D.BILLINGTON, MATES CONF PROC 1989

25. Quality of data transmission over PLC links in stationary and transient states of electric power network obtained on the basis of several years experimental research. — VV DRASKOVIC, N.SIMIC, CIGRE 1992

26. Propagation Characteristics of Power Line Carrier Signals — B.I.C NICOARA, AMSE Press, Vol. 45 No.3, 1992

27. Spread Spectrum Communications — C.E Cook et al, IEEE Press, ISBN 0-87942-170-3

28. Coherent Spread Spectrum Systems — J.K.HOLMES, J.Wiley&Sons

29. Digital Communications and Spread Spectrum Systems — ZIEMER,R.E and PETERSON,R.L, J.Wiley&Sons

30. Information, Modulation and Noise — M.Schwartz, McGraw Hill 1984

31. Spread Spectrum for Commercial Communications — IEEE Communications Magazine, April 29,pp66-79

32. Home and Building Electronic System, HBES Part 2-1 System Overview Architecture — prEN 50090-2-1

33. Consideration of Interference from Spread Spectrum Systems to Conventional Voice Communications Systems — CCIR 652

34 A Method for Calculating Adjacent Band Interference — CCIR 654-1

35.Protection Ratios Required for Spectrum Utilisation — CCIR 525-1

36.Low Power Radio and Metering — Professor H.DOREY, 16 February 1994

37.Mobile Communications Systems — J.D.PARSONS, J.G.GARDINER, Blackie ISBN 0470212136

38.Land Mobile Radio Systems — IEE Telecommunications Series 14, J.R.Holbeche, ISBN 0-86341-049-9

39.Pan European Cellular Radio — D.M BALSTON, Electronics and Communications Engineering Journal, Volume 1, No.1, January 1989.

40. The Growth of Wireless Based Networks — N.PLAYFORD, IONICA, February 1992

41. Transmission Networking SONET and the Synchronous Digital Hierarchy — M.SEXTON and A.REID, Artech 1992

42. Signalling on Low Voltage Installations Mains Communication Systems Protocol and Data Integrity and Interfaces — CLC SC105A - WG3 / DRAFT, PrENV 50065, 3 November 1994

43. Computer Networks — A.S.TANNENBAUM, Prentice Hall International, ISBN 0-13-166836-6

44. Practical Data Communications, Modems, Networks and Protocols — F.JENNINGS, Blackwell Scientific, ISBN 0-632-01306-0

45. Active RF Filter for High Voltage Lines — D.R MORGAN ATT, July 1993

46. Home and Building Electronic System: Systems Overview — Cenelec, prEN 50090-2-2: 1993 E

47.Home and Building Electronic System: Home Network Media - Network Based on Twisted Pair — Cenelec, prEN 50090-5-2: 1993 E

48. The Coming of Age of Multitenant AMR Power Line Carrier Based Submetering — Automatic Meter Reading News, March 1993

49.Radio Frequency Remote Meter Reading System — Badger Meter Inc., 26 March 1993

50.Performance Enhancement Using Forward Error Correction on Power Line Communications Channels
Dr M.L CHAN, Mr D.FRIEDMAN, R.W.DONALDSON
Ref 93 SM 367-3 PWRD IEEE 1993

51.Power Station Metering - A New Concept
R.WATSON, E.W PINER
NIEB 1992

52.A Flexible Polyphase Meter
C.A.RICHARDSON P.McDAID
Landis & Gyr 1992

53.Multifunction Features Extending Tariff Applications in Domestic and Industrial Metering
D.BLACK
Landis & Gyr 1992

54.Application of New Metering Technology to Market Orientated Electricity Supply
G.A.KINGSTON L.M.DALZIEL
Schlumberger Ind. 1992

55.A Common Meter Support System
N.G.N ORCHARD
Pilot Systems (London) Ltd
MATES 1992

56.A Practical Solution For Meter to Hand Held Computer Communications
B.INALL, J.JEFFREYS, I.G.WHITE
1992

57.Automation in the Prospect County Council from Metering to Billing
W.NICHOLS, J.R.FISHER
1993

58.Remote Meter Displays
S.B.TWEEDY
Northern Electric PLC 1993

59.Design and Operating Experience of a Remote Load Profiling, Meter Reading, Collection and Forwarding System for Large Customers
G.JEFFRIES, C.D.LONG
Yorkshire Electricity PLC February 1992

60.Second-Tier Metering for Smaller Industrial and Commercial Consumers — R.R.LOE, Landis & Gyr Ltd, 1993

61.Metering Standards and Directives — IEE Power Division, 1992

62.Fourth International Conference on Metering, Apparatus and Tariffs for Electricity Supply — IEE Conf.Publ 367, 17-19 November 1992

63.Integrated Services Digital Network (IEEE Tutorial) — W.STALLINGS (Editor), IEEE Press 1993

64.Handbook of Electronic Calculations — KAUFMAN & SIEDMANN, McGraw Hill 1988

65.Transmission Systems — J.E.FLOOD & P.COCHRANE, IEE Telecoms Series No: 27 1991

66.Optical Fibre Communications — J.M.SENIOR, Prentice Hall 1985

67.The Effect of Randomly earthed Ground Wires on PLC Transmission - A Simulation — JAF BRANDAO, JF BORGES de SILVA, IEE Transaction on Power Delivery Vol No.5,No.4, November 1990

68.PLC Signal Attenuation in Branched Networks — DW DURBAK, DW STEWART, IEEE Transaction on Power Delivery Vol 5, No.2 April 1990

69.Power Line Carrier Interference from HVDC Converter Terminals — PJ TATRO et al, IEEE Transaction on Power Delivery, Vol 8, No.3, July 1993

70.Bi-directional Communication for Remote Metering and Sophisticated Tariffication — E. GOLINSKY, Isreal 5 May 1992

71.Distribution Network Automation and Communication Means — A. PAGES, EDF Bulletin, Serie B No.4, 1989

72.Digital Simulation of Fault Location on EHV lines Using Wideband Spread Spectrum Techniques — V. TAYLOR et al, IEEE Proc on Gener.Transm.Distrib, Vol 142 January 1995

73.Transmission Systems for Medium Voltage Networks — C.TEYSANNDIER et al, 1994

74.A New Programmable Modem for Power Utility Communication Networks — R.PAULI, 1993

75.Transmission Sur Ligne d'Energie — Alcatel CETT, 1988

76.Equipments de Teleconduite et D'automatisation Pour Resau D'Energie Electronique — Alcatel CETT 1988

77.Power Line Carrier Systems — Alcatel Telettra, 1984

78.Power Line Carrier Terminals — Alcatel Telettra, Chinacom 1985

79.Expandable Carrier System for Electric Utilities and Transportation Companies — ANT Ltd 1984

80.Das Digitale Betriebsfernmeldesystem — ANT Ltd 1986

81.Tragerfrequenz - Aufbausystem in Bauweise — ANT Ltd 1986

82.A Great Idea that Didn't Work - Provision of Rural Service over Rural Power Lines — ATT Ltd 1984

83.Power Line Carrier Communications in Electricity Gas, Water and Petroleum Supply Systems, in Industry and Transport — Brown Boveri Company 1985

84.A New Generation of Transmission Equipment for Power Lines — Ericsson Ltd 1984

85.Automatic Coded Block System — FATME 1984

86.Supervision de Resau — FATME 1984

87.Power Line Carrier Equipment — Mashpriborintorg 1984

88.Equipment de Telecommunications a Courant Porteurs sur Ligne de Transport D'Energie — SECRE 1984

89.Transmission of Telecontrol Signals in Medium Voltage Networks — Siemens 1984

90.Mains Communications Systems Protocol and Data Integrity and Interfaces — Draft PrENv 50065-3 November 1994

91.Opportunities for ATM — Financial Times Telecoms & Media Publishing (1996)

92.Reflection on the Transmission by Current Carriers in Household Units — CENELEC SC105A October 1993

93."spread spectrum" techniques — CENELEC SC105A October 1993

94.ROBCOM, An Optimum Communication Concept for Electrical Distribution Networks — DATAWATT BV April 1991

95.Wireless Options for Expanding Wireline Networks — J.ESTES Mobile Communications International May 1995

96.A Comparative Study of National ISDN versus International ISDN Installations and Tariffs — S.Srinivasan IEEE Network May/June 1995 Vol. 9 No:3

97.Hands Off -A Modern Energy Policy — Rt. Hon. T. Eggar MP, Ministry for Industry&Energy IEE REVIEW, July 1995

98.Serving the Public Interest — M. O'Neill MP Labour Energy Spokesman IEE REVIEW, July 1995

99.Radio Fixed Access — DTI Consultative Document 1995

100.A Strategy for Use of the Radio Spectrum — Radiocommunications Agency March 1995

101.Spread Spectrum Goes Commercial — IEEE Spectrum, August 1990, pp40-45.

102.Data Communications International — 21 September 1995

103. Self-Healing Networks for SDH and ATM — IEEE Communications Magazine September 1995 Vol. 33 No.9

104.Digital Interactive Broadband — IEEE Network Magazine September/October 1995, Volume 9, No.5

105.Spread Spectrum Communications: An Overview — C.CONTICELLO Telettra August 1987

106.Data Communications — November 21, 1995

107.Communications International — November 1995

108.Times Business News — December 11, 1995

109.Voltage Characteristics of Electricity Supplied by Public Distribution Systems — CLC/BTTF 68-6(SEC) 16 August 1992

110.Utilities and Two Way Communications
D.C.Yeung
F.A.Morgan
IEEE Comms Mag.
April 1995

111.The Access Question
AT&T:
Path to the Future
Telecommunications
Magazine
1994

112.Broadband Service: An
Integrated Approach
J.Marin
R.Unvural
T.Tedijanta
Telecommunications
Magazine
1994

113.Communications Using Pseudonoise
Modulation on Electric Power Distribution
Circuits
P.K.van der Gracht
R.W.Donaldson
September 1985

114.A Spread Spectrum Communication
System for Load Management and
Distribution Automation
W.Hagman
IEEE Transac, Power
January 1989

115.Utility Load Management
Using Home Automation
K.P.Wacks
IEEE Trans. Power
May 1991

116.Attenuation of Communication
Signals on Residential and Commercial
Intrabuilding Power Distribution Circuits
M.H.L CHAN
R.W.Donaldson
IEEE Trans
Electromagnetism
Compat. Vol.

117.Personal Computer Communications on
Intrabuilding Power Line LANS using CSMA with
Priority Acknowledgements
J.O.Onunga
R.W.Donaldson
IEEE Journal Feb 1989

118. Reaching Out with Two Way
Communications
EPRI Journal
September 1990

119.Field Test of Distribution Automation Equipment at Kansas Utilities
A.Pahwa
J.K.Shultis
D.Rucker
W.N.Dowling
IEEE Transac,
on Power Delivery
Vol 6, No.4,
October 1991

120 A Novel High Speed PLC Communication Modem
K.C.Abraham
S.Roy
IEEE Transac,
on Power Delivery
Vol 7, No.4,
October 1992

121. A Vision of the Future Network
BT Engineering
Volume 11
October 1992

122.Performance Management Issues of Currently Operated ATM Enterprise Networks
R.Jaeger
IEEE Comms
Magazine
Jan.1996

123.Interconnecting 802 LANs through ISDN
N.Kavoc
Proc. Internetworking
Berne, June 1993

124. Performance Analysis of Local Computer Networks
J.Hammound
P.J.O'Reilly
Addison Wesley 1986

125. Measurement of Voice Transmission Performance Applicable to EMC Analysis
CCIR 526-1

126. Cocatenated Coding for Frequency-Hop Spread Spectrum with Partial Band Interference
C.D.Frank/M.B.Pursley
IEEE Transactions on
Communications
Vol.44,No:3
March 1996

127. Application Layer and System Architecture Explanations
CEN/TC/294/
WG2 N.56
April 1996
F.Bauer

128. The DLMS Standard	CEN/TC/294/ WG2 N.62E November 1996
129. Companion Specification for Simple Application VDE	CEN/TC/294/ WG2 N.57 March 1996 (Rev 1)
130. Companion Specification for Simple Application VDE Using ASN.1 and DLMS	CEN/TC/294/ WG2 N.48E June 1995
131. A-XDR, BER and PER TRANSFER SYNTAX COMPARISON	CEN/TC/294/WG2 N.59E November 1995
132. Agreement Needed Soon On EU Power Market	Financial Times Friday 14 June 1996
133. Grid Proceeds Boost London Electricity	Financial Times Saturday 15 June 1996
134. RTU/IED Interface Protocol Survey	IEEE 1994
135. Hitch for Electricity Bills by Computer	Daily Telegraph 12 July 1996
136. Field Demonstrations of Communications Systems for Distribution Automation - Phase 2	EPRI Final Report November 1984
137. Communicating with Domestic Electricity Meters	S.J.HOLMES and D.CAMPBELL Schlumberger Industries France 1991
138. DMS Series Fixed Radio Access Systems	Dr Hans-Peter Petry Bosch Telecom November 1995
139. Metering and Signalling to Low Voltage Consumers	CEPEL 1991

The following ITU-T Recommendations were also used as general references:

140. ITU-T G.703 Physical/Electrical Characteristics of Hierarchical Digital Interfaces (1991)

141. ITU-T G.709 Synchronous Multiplexing Structure (03/93)

142. ITU-T G.804 ATM Cell Mapping into Plesiochronous Digital Hierarchy (11/93)

143. ITU-T G.811 Timing Requirements at the Outputs of Primary Reference Clocks Suitable for Plesiochronous Operation of International Digital Links (1988 BB III.5)

144. ITU-T G.812 Timing Requirements at the Outputs of Slave Clocks Suitable for Plesiochronous Operation of International Digital Links (1988 BB III.5)

145 ITU-T 3010 Principles for a Telecommunications Management Network (10/92 Rev 1)

146.ITU-T V.23 600/1200 Baud Modem Standardised for Use in the General Switched Telephone Network (1988 VIII.1)

147.ITU-T I.363 B-ISDN ATM Adaption Layer Specification (11/93 Rev 2)

148.ITU-T Q.2110 B-ISDN ATM Adaption Layer - Service Specific Connection Oriented Protocol (SSCOP) (07/94)

149.ITU-T Q.2120 B-ISDN Metasignalling Protocol (02/95)

150.ITU-T Q.2130 B-ISDN Signalling ATM Adaption Layer-Service Specific Coordination Function for Signalling at the User Network Interface (SSCFat UNI) (07/94)

151.ITU-T Q.2140 B-ISDN Signalling ATM Adaption Layer-Service Specific Coordination Function for Signalling at the Network Node Interface (SSCFat UNI) (02/95)

152.ITU-T Q.2931 B-ISDN DDSS2 UNI Layer 3 Specification for Basic Call/Connection Control (02/95)

Appendix A

THE SETTING OF STANDARDS AFFECTING POWER LINE CARRIER, REMOTE METER READING AND ASSOCIATED COMMUNICATIONS SYSTEMS

The Standards Organisations

There are a number of main organisations responsible for setting standards directly affecting remote meter reading and power line carrier communications.

British Standards Institute

The British Standards Institute (BSI) is responsible for setting those standards, including power line carrier communications equipment, remote meter reading and other communications equipment that shall be used in the United Kingdom.

CENELEC: Comite European de Co-ordination des Normes Electrical and Electronic Standards

CENELEC is a European based agency which represents all the EEC and EFTA countries and includes the coverage of the electronic and communications standards by CENELEC committees. In addition to the committees Working Groups are used to undertake the discussions which lead to the presentation of standards. Many standards set by national institutions are adopted as CENELEC standards or superseded by CENELEC standards. Of particular relevance in remote meter reading and power line carrier systems are the following committees:

Technical Committee PEL/122 - Mains Signalling

Technical Committee PEL/15 - Remote Meter Communications

Technical Committee PEL/89 - Telecontrol, teleprotection, and Association Telecommunications for electric power systems.

One of the most important family of standards is currently being developed by CENELEC under the following committees:

CENELEC TC 105

This CENELEC Technical Committee covers Home and Building Electronic Systems and under its auspices standards are being prepared to cover the integration of information processing , monitoring, control and in-house communication including data transmission required for information processing, monitoring, controlling in and around homes and buildings, including the gateways to different transmission media and public networks, taking into account all matters of EMC and electrical safety. TC 105 does not prepare device standards but the necessary hardware and software interfaces.

CENELEC SC 105 A

This is a CENELEC subcommittee preparing standards for communications systems using low voltage supply line over wiring of buildings as a transmission medium and use in frequencies above 3 kHz and up to 148.5 kHz. This includes the allocation of the frequency bands for signal transmissions on the mains. Probably the most important task of SC105A is the development of EN 50065, Parts 1 to 7, which covers mains communication.

INTERNATIONAL ELECTROTECHNICAL COMMITTEE

The IEC is responsible for preparing electronic and communications standards by International committees. Three particular committees are of interest to power line carrier and remote meter reading:

IEC TC 13

This committee covers Remote Meter reading and promotes two standards IEC1107 and IEC1142 which cover local reading via optical fibre or wire.

IEC TC 57

This committee covers remote meter reading for the Electricity, Gas, Water and Other Fluids and Heating Industries. It has been proposed recently that this committee also start investigations into the use of X.25, ISDN and other methods for Telecontrol. The aim of the proposed work is not to define a new standard but to define a set of rules for using existing protocols over data networks for Telecontrol purposes.

IEC TC 294

This committee covers communications systems for and remote reading of meters.

CIGRE: Conference International des Grandes Research Electronics in Haute Tension

CIGRE is a European based agency which represents countries in the EEC and EFTA but also includes the USA, Canada and the Soviet States. Normally the members of CIGRE are from standards organisations or individual companies.

ITU: International Telecommunications Union

The regulations formulated by the ITU have the status of formal treaties of the UNO member countries and are binding on the signatories who agree to them. Previously the ITU issued regulations under its three committees CCIR, CCITT and the IFRB.

Other Bodies Influencing Power Line Carrier and Remote Meter Reading Standards

There are many other bodies which do and can influence Power Line Carrier and Remote Meter Reading Standards including:

ECMA: European Computer Manufacturer's Association

EIA: Electrical Industries Association

Power Engineering Sections of the Engineering Institutes of the IEE and IEEE and others.

The important factor to note about these groups is the international harmonisation with many from the above mentioned being members of committees affecting both Power Line Carrier and Remote Meter Reading. One interesting fact to note about these organisations is that prior to the deregulation and privatisation of the Utilities industries there was not exactly a proliferation of standards relevant to power line carrier and remote meter reading and the numbers of the national standards available on these subjects was insignificant to those standards produced by other industries, for example the ITU communications recommendations/standards. The standards produced with reference to remote meter reading indicates that this situation is now being addressed very earnestly by many of the above organisations, and also highlights the interest in remote meter reading and power line carrier systems.

Appendix B

Power Line Carrier Signal Levels in Relation to Link Planning

Power Levels in a Power Line Carrier Communications System

It is intended in this appendix to propose how the individual steps in the planning of a link, in Figure 88, between a Customer's Premises and the first Data Collection Centre using a Frequency Hopping Power Line Carrier or conventionally modulated systems should be carried out. In a report produced for CENELEC SC105A, reference Reflection on the Transmission by Current Carriers in Household Units, October 1993 the maximum authorised signal level is proposed as 116 dBμV. This may be an unnecessary limitation on Power Line Carrier operation. For example 116 dBμV may be fine in one location at one frequency from the allocated Power Line Carrier band (3 to 148 kHz), but 80 dBμV at another Power Line Carrier frequency could cause interference, whilst a level of 120 dBμV may cause no interference in some locations but is the necessary power level to make a system work.

For Power Line Carrier operation it is proposed to treat power output calculations for any communication links on an individual basis, like radio links, with only a maximum limit imposed on the applicant where for example there is clear evidence of interference to other users or a safety issue. The following sections clarify this approach and through two examples, one for conventional FSK and one for Frequency Hopping Power Line Carrier suggest a method that could be used

It is assumed that the following conditions have been met prior to any calculation taking place:

- Location of Customer's Premises. Usually included in site survey information

- Location of Data Collection Centre} Usually included in site survey information

- Equipment Type and Parameters

Link Budget Description

Link Number

Each link between a Customer's Premises and a Data Collection Centre should be given an individual designation. This shall also aid any network management system in identifying faults.

Equipment Type

This should identify the particular Customer Premises equipment being used,for example Frequency Hopping or possibly conventional FSK/ASK equipment.

Data Collection Centre and Customer Premises Designators

These should be alpha-numeric and would also be used as an aid to network management.

Data Collection Centre and Customer Premises Grid References

These would also be used as an aid to network management and for future reference.

Data Rate Requirements

The capacity in kilobits/s or bits/s should be included for the link.

Frequency Hop Set

In the case of a Frequency Hopping Power Line Carrier system this should contain information on the particular hop set being used.

Path Length

This is the distance from Customer's Premises to Data Collection Centre, in kilometres (or fractions of a kilometre).

Alternative Routes

This section should include any alternative routing arrangements via radio or telephone line for example.

Losses

This section includes all of the loss mechanisms, for example attenuation at transformer sites, that could be incurred over the link.

Filter Losses

Filtering losses account for any in-line or other mains signalling filters used.

Connector Losses

These are the losses occurrincurring in any transition point such as connecting the PLC Customer Premises Equipment to the Power Line.

Gains

Gains are produced by repeaters or other in-line amplification devices.

Transmitted Power

This is the power at the output of the Customer Premises or Data Collection Centre Equipment.

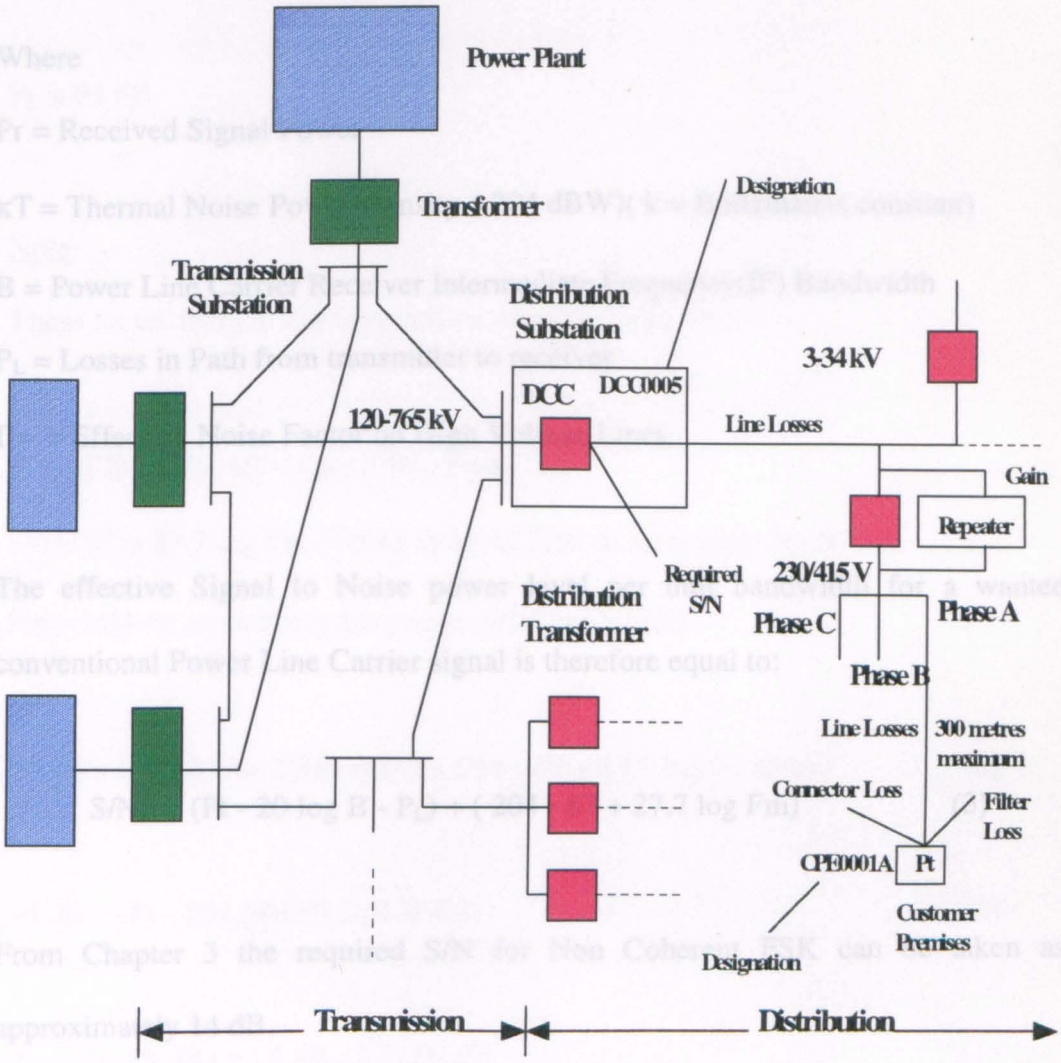

Figure 88 - Link Planning Model

FSK Power Line Carrier System Worked Example

For a conventional Single Channel Power Line Carrier Receiver, the receive power is given by the expression:

$$Pr = Pt - P_L \qquad (1)$$

and the Signal to Noise Ratio S/N is given by:

$$S/N = Pr - \kappa T + B + \Gamma\infty \qquad (2)$$

Where

Pr = Received Signal Power

κT = Thermal Noise Power Density (-204 dBW)(k = Boltzmanns constant)

B = Power Line Carrier Receiver Intermediate Frequency(IF) Bandwidth

P_L = Losses in Path from transmitter to receiver

$\Gamma\infty$ = Effective Noise Factor on High Voltage Lines

The effective Signal to Noise power level per unit bandwidth for a wanted conventional Power Line Carrier signal is therefore equal to:

$$S/No = (Pt - 20 \log B - P_L) + (204 - 67 + 27.7 \log Fm) \qquad (3)$$

From Chapter 3 the required S/N for Non Coherent FSK can be taken as approximately 14 dB.

P_L = Losses in Path from transmitter to receiver

where

P_L = Mains Filter Loss(Lm) + Distribution Feeder Loss (Phase A)(Ldf) + Transformer Loss (Lt) + Medium Voltage Feeder Loss (Lvf) (4)

where $Lm \cong 3$ dB

$Ldf \cong 10$ dB (Typical)

$Lt \cong 50$ dB (Typical)

$Lvf \cong 30$ dB (Typical)

$P_L \cong 93$ dB

<u>Note</u>

These losses include any connector and other minor losses.

B = 1200 Hz for 600 bits/s FSK system

$\Gamma\infty = 67 + 27.7 \log Fm$ (Taken from CCIRR as rural noise level)

Fm = highest modulating frequency (PLC = 95 kHz)

$$14 \text{ dB} = (Pt - 20 \log 1200 - 93) + (204 - 67 + 27.7 \log 95 \text{ kHz}) \quad (5)$$

$$14 \text{ dB} = (Pt - 154.58 \text{ dB}) + (274 \text{ dB}) \quad (6)$$

$$(Pt - 154.58 \text{ dB}) = 14 \text{ dB} - 274.88 \text{ dB} \quad (7)$$

$$Pt = 14 \text{ dB} - 274.88 \text{dB} + 154.58 \text{ dB} \quad (8)$$

$$Pt = -106.3 \text{ dB}$$

$$Pt = -76.3 \text{ dBm}$$

If the Repeater across the first transformer had a Gain of 3 dB. This could be reduced to - 79.3 dBm.

Frequency Hopping Power Line Carrier Worked Example

When looking at the equivalent Frequency Hopping Power Line Carrier system, the expression above must be modified, to take into account the Dwell Time (DT) factor. equation (3) becomes

$$S/No = (Pt - 20 \log B - P_L) + (204 - 67 + 27.7 \log Fm) - 20 \log DT \qquad (9)$$

Taking all figures as the same but for the bandwidth, which for the Frequency Hopping Power Line Carrier Case is given by:

B = 2400 Hz for 1200 bits/s Frequency Hopping System.

Assume 15 Frequencies in Hop Set DT = 1/15 = 66.67 msecs

$$14 \text{ dB} = (Pt - 20 \log 2400 - 93) + (204 - 67 + 27.7 \log 95 \text{ kHz}) - 20 \log 66.67.10\text{-}3 \qquad (10)$$

$$14 \text{ dB} = (Pt - 67.6 - 93) + (204 - 67 + 137.88) + 0.78 \qquad (11)$$

$$14 \text{ dB} = (Pt - 160.6) + (274.88) + 0.78 \text{ dB} \qquad (12)$$

$$Pt = 14 \text{ dB} + 106.6 - 275.66 \qquad (13)$$

$$Pt = -155.06 \text{ dB}$$

$$Pt = - 125 \text{ dBm}$$

Comment

EN 50065-1 suggests a maximum power level of 116 dBμV for Power Line Carrier systems. The bandwidth available on Power Lines should be treated like the radio spectrum where a user has to make a formal request to use any part of the spectrum. This request should be accompanied by the requisite link budget calculations and calculated Power Levels to achieve the level of performance required, and cause no interference to other users of the Power Line, and should not cause problems with communication systems outside the Power Line Carrier sphere. There is further reasoning behind this approach. Attenuation levels on Power Line Carrier vary considerably, both in relation to Frequency and time of day. Figures 89 and 90 show how conditions on Power Line vary so much that it shall be virtually impossible for single frequency users, for example, to adhere to a fixed power level within reasonable limits since, the attenuation levels for fixed frequency operation vary in conjunction with not only time, but type of building and situation, when other electrical equipment is being used on the same power line. This of course reinforces the argument why Frequency Hopping Power Line carrier systems should perform better than single frequency systems since they are virtually immune to this type of interference.

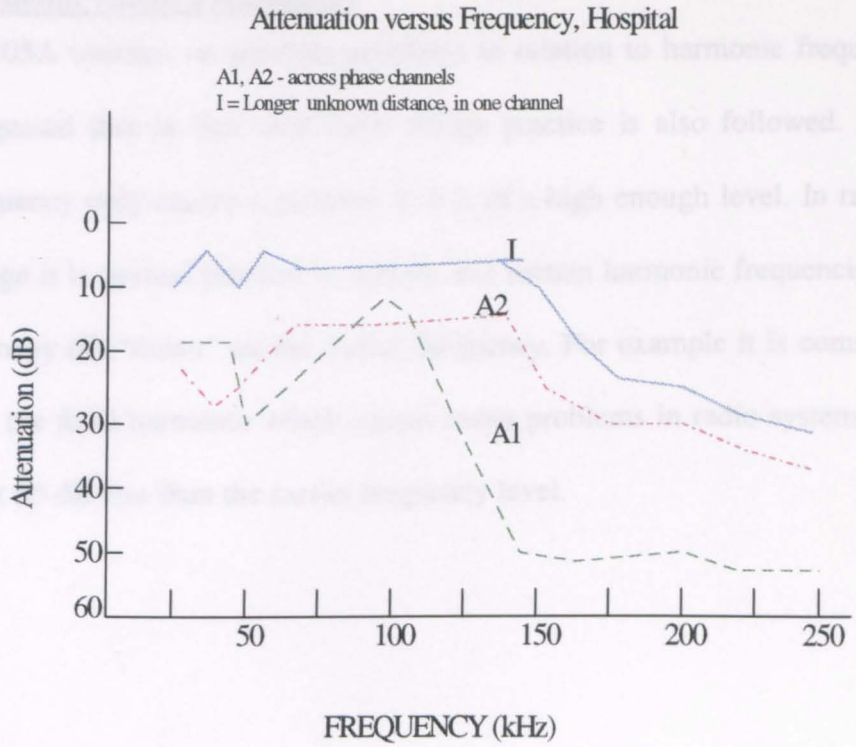

Figure 89 - Attenuation versus Frequency, Hospital Building, Daytime

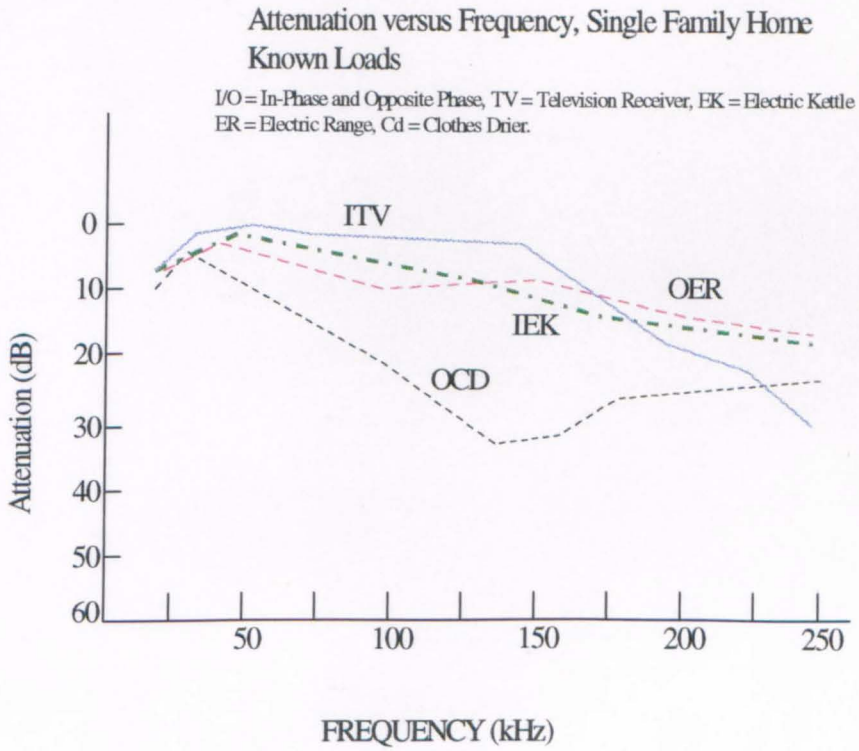

Figure 90- Attenuation versus Frequency, Single Family Home, Known Loads

Harmonic (Beat) Frequencies

SC105A touches on possible problems in relation to harmonic frequencies. It is suggested that in this case radio design practice is also followed. A harmonic frequency only causes a problem if it is of a high enough level. In radio systems design it is normal practice to specify that certain harmonic frequencies should be so many dB "down" on the carrier frequency. For example it is common to state that the third harmonic which causes many problems in radio systems shall be at least 60 dB less than the carrier frequency level.