Powering Systems from Ambient Energy Sources

Rajeevan Amirtharajah
University of California, Davis

Internet of Things

- **Definition: network of uniquely identifiable objects communicating using an Internet-like structure**
  - Wireless connectivity for embedded processors running TCP/IP to enable machine-to-machine (M2M) communication
  - Physical channel and protocol choice is orthogonal
- **Potential market volume on the order of billions of devices**
  - 25 billion devices by 2015, 50 billion by 2020 (CISCO)
  - 15 billion devices by 2015 (Intel / IDC)
  - 3 billion subscribers with 5-10 devices each + 1.5 billion vehicles + 3 billion utility meters (Ericsson)
- **Trillions of dollars at stake**

IoT and Winemaking

- **Instrumented networked fermentation tanks**
  - Monitor temperature, brix, organic compound evolution, yeast growth
  - Control temperature, pump-over
- **Precision irrigation**
  - Sense single-vine water status and adjust delivered water volume
  - Improve grape quality
  - Decrease water use

Networked Smart Fermentation Tank

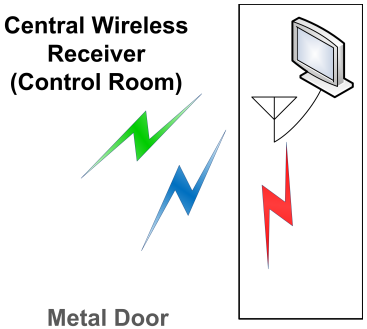

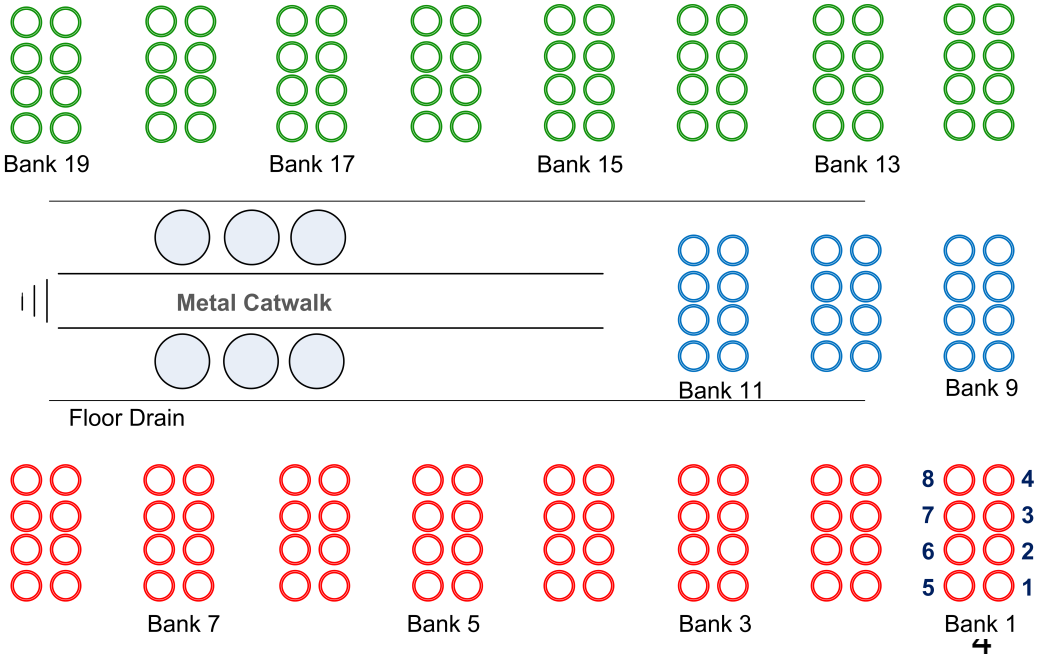

Precision Irrigation System

Networked Valve

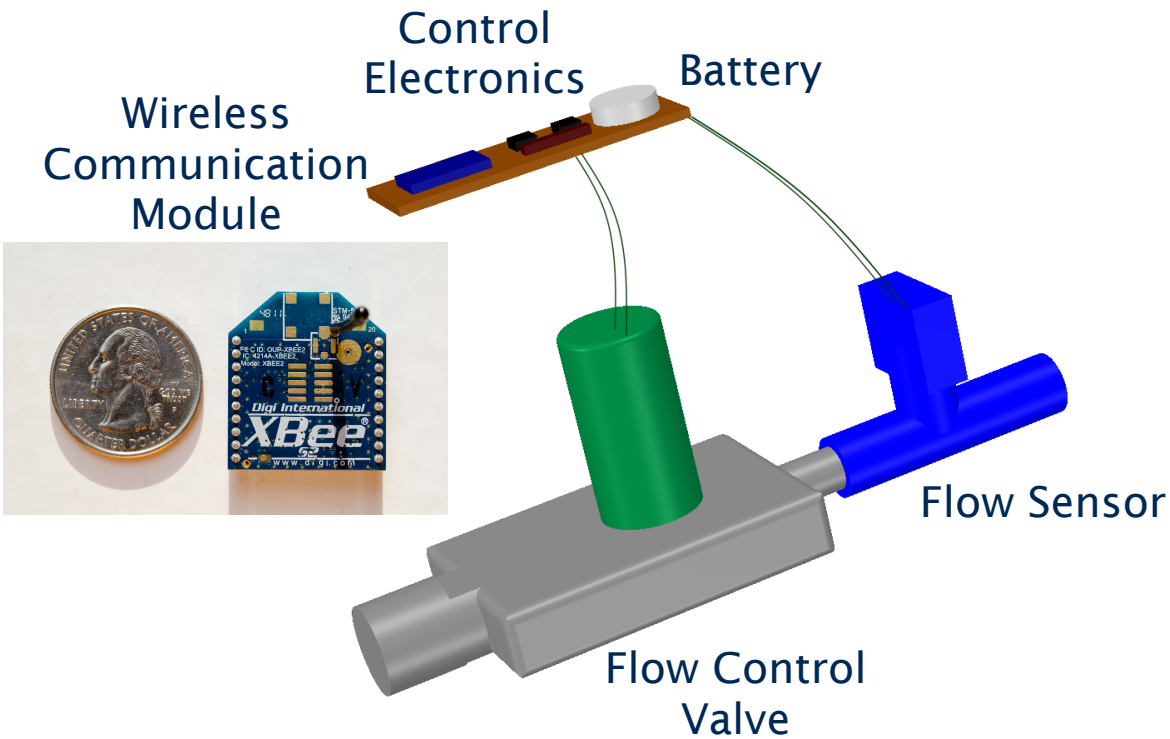

Cloud Interface

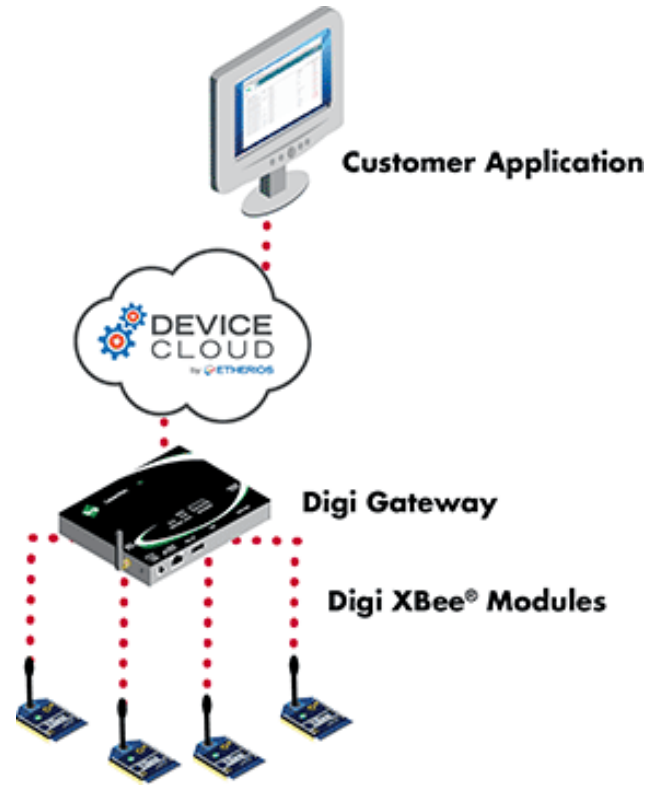

- **Leverage commercially-available M2M cloud solution**
  Long-range battery-powered small form-factor wireless
  Centralized microcontroller-based valve control

Energy Scavenging Wireless Sensing IoT Node

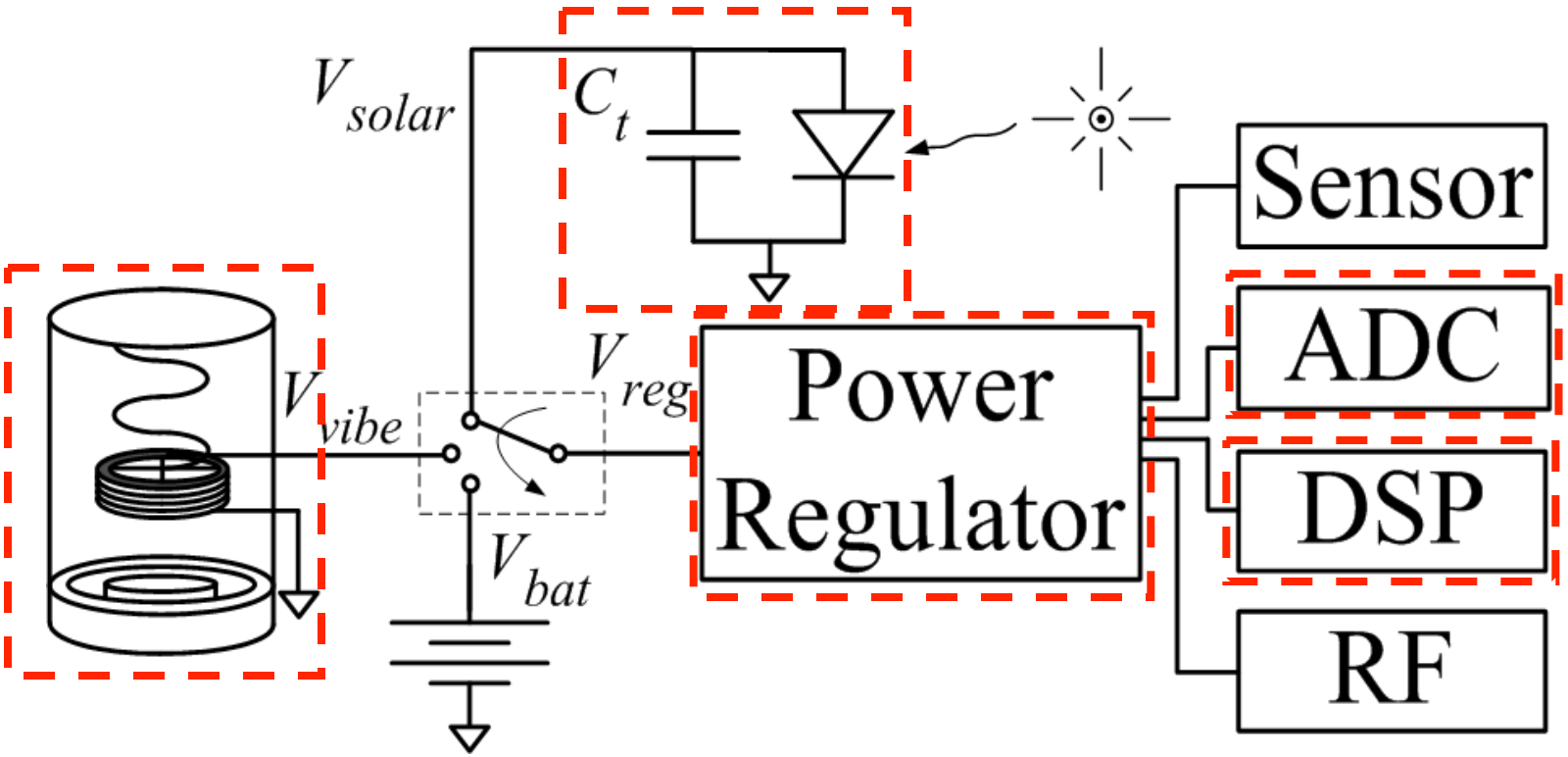

- **Extend sensor node lifetime beyond battery limitation**
  Scavenging **energy** from light, heat, and vibrations
  Efficient **power management**
- **Cope with the variability of the harvested power**

  Energy scalable data conversion & approximate signal processing

System Requirements

Functional Block	Power	V_{DD}	R_{EQ}
Sensor [R. Amirtharajah et al, *SPIE*, 2005]	185 μW	1.2 V	7.78 kΩ
ADC [M. Scott et al, *JSSC*, 2003]	3.1 μW	1 V	322 kΩ
DSP [B. Warneke et al, *ISSCC*, 2004]	6 μW	<1 V	166 kΩ
RF [B. Otis et al, *ISSCC*, 2005]	1 mW	1.2 V	1.44 kΩ

- System works with low duty-cycle, total average power = 5 μW
- ADC - requires low power and clean V_{DD}
- DSP - requires low power, noisy V_{DD} ok
- RF - requires high peak power

Multiple-Input Power Supply Measured Output

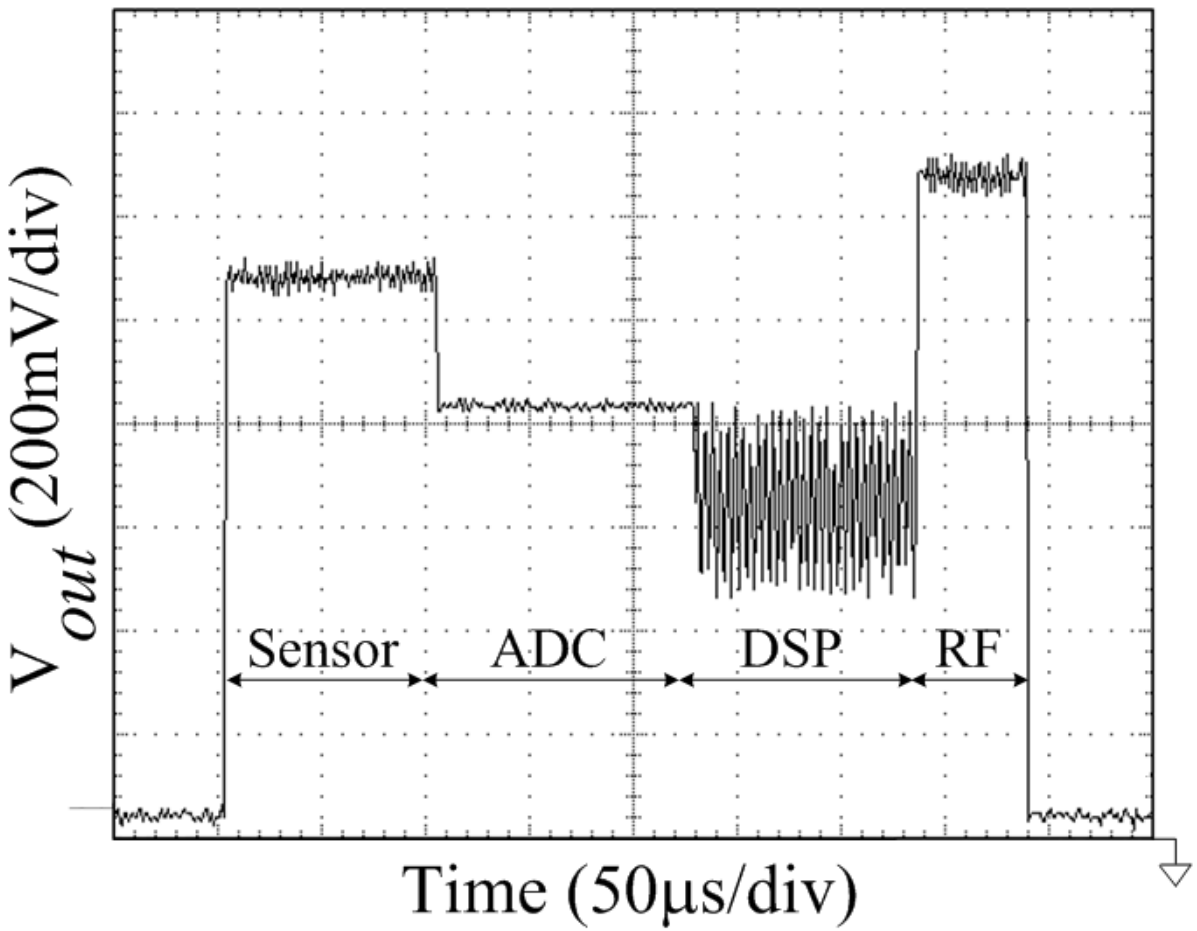

- **DC/DC output controller switches between functional blocks**
- **DSP tolerates high ripple, so the controller trades efficiency for ripple**

Review: CMOS Power Dissipation

Total Power:

$$P_{TOT} = P_{dyn} + P_{sc} + P_{stat} + P_{leak}$$

$$= \alpha C_L V_{dd}^2 f + V_{dd} I_{peak} \left(\frac{t_r + t_f}{2} \right) f$$

$$+ V_{dd} I_{static} + V_{dd} I_{leak}$$

- **Neglect short circuit power, focus on reducing dynamic power, static power and leakage current**
- **Each subsystem will have different voltage/power/ energy requirements**

Outline

- Introduction
- <u>System Power Consumption</u>
- Energy Harvesting and Power Management
- Conclusions

Device Power Consumption

0.33 mW

0.51 mW

3.75 mW

2 mW – 4 mW

0.31-0.74 mW

0.45 mW – 9 mW

Mobile Phone Peak Power Consumption

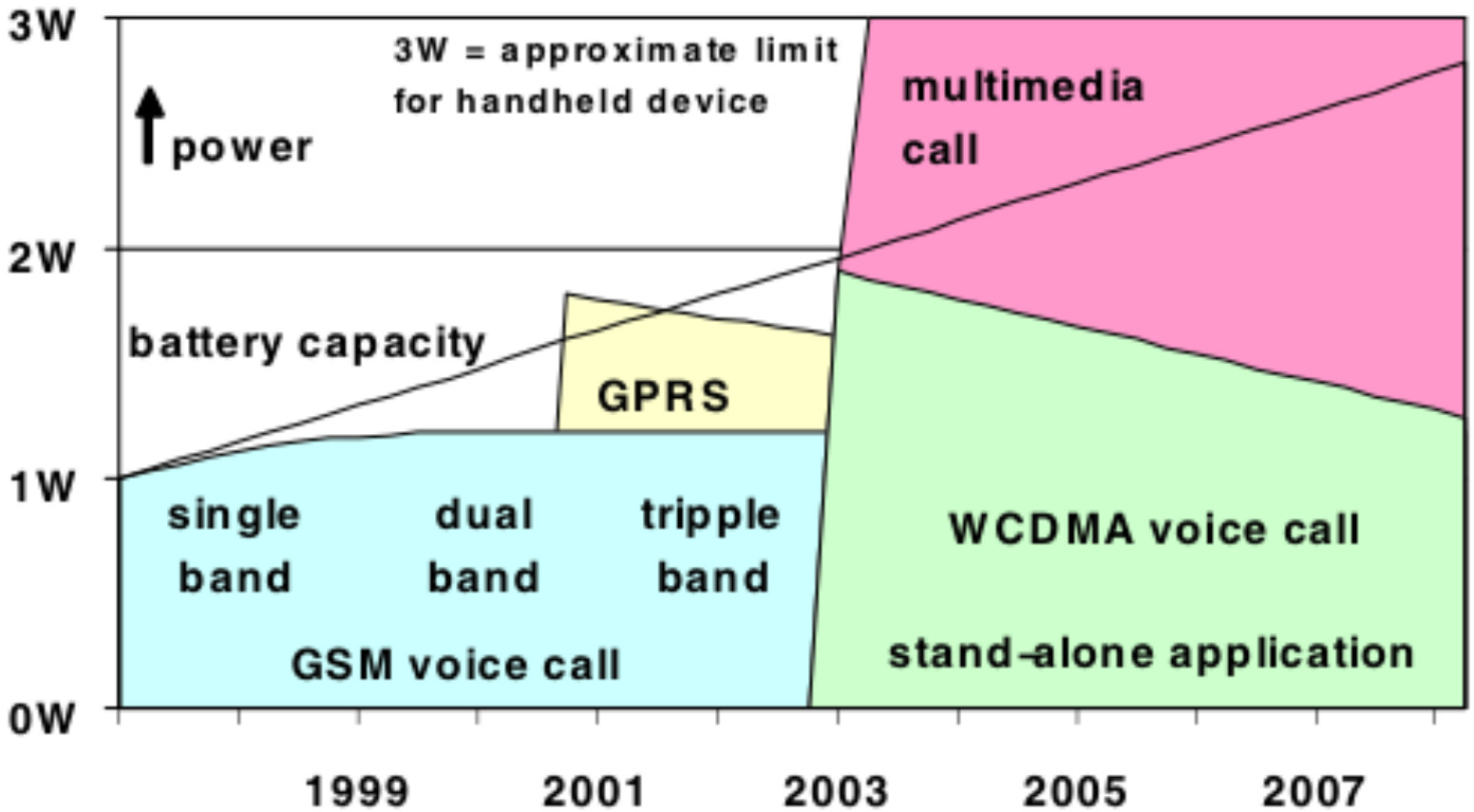

Van Berkel, **DATE 09**

- **Li Ion battery capacity 800-3300 mAh at 3.7V (3-12 Wh)**

XBee RF Module Power Consumption

Range	Active Power	Sleep Power	Frequency	Protocol	Tx Power	Data Rate
30 m	1 W	20 μW	2.4 GHz	802.11b/g/n	40 mW	1-72 Mbps
30 - 90 m / 90 m – 1.6 km	100 – 710 mW	33 μW	2.4 GHz	802.15.4	1 – 63 mW	115.2 Kbps
40 – 90 m / 120 m – 3.2 km	120 – 700 mW	3.3 – 13.2 μW	2.4 GHz	ZigBee	1.25 – 63 mW	1200 bps – 1 Mbps
305 – 610 m / 6.5 – 14 km	750 mW	10 μW	900 MHz	Proprietary	250 mW	10 – 200 Kbps

Commercial Wireless Sensor Mote

Moteiv Sky mote, 2006

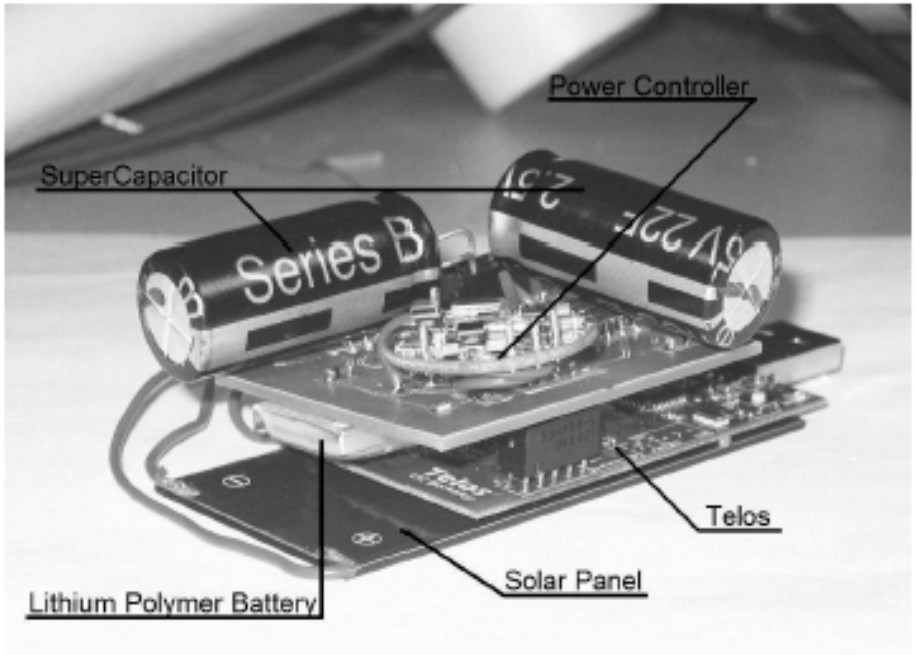

Jiang, IPSN/SPOTS 2005

- 2000's sensor node: 70 mW all active, 17 μW idle
- 2012 mote-on-chip: 100 mW all active, 3 μW deep sleep
- Power sources contribute significant volume and cost
- Smaller system (1 cm^3) desirable (less obtrusive military sensor, implantable biomedical device)
- Reduce power consumption, get energy from environment

UC Davis Wireless Display Node

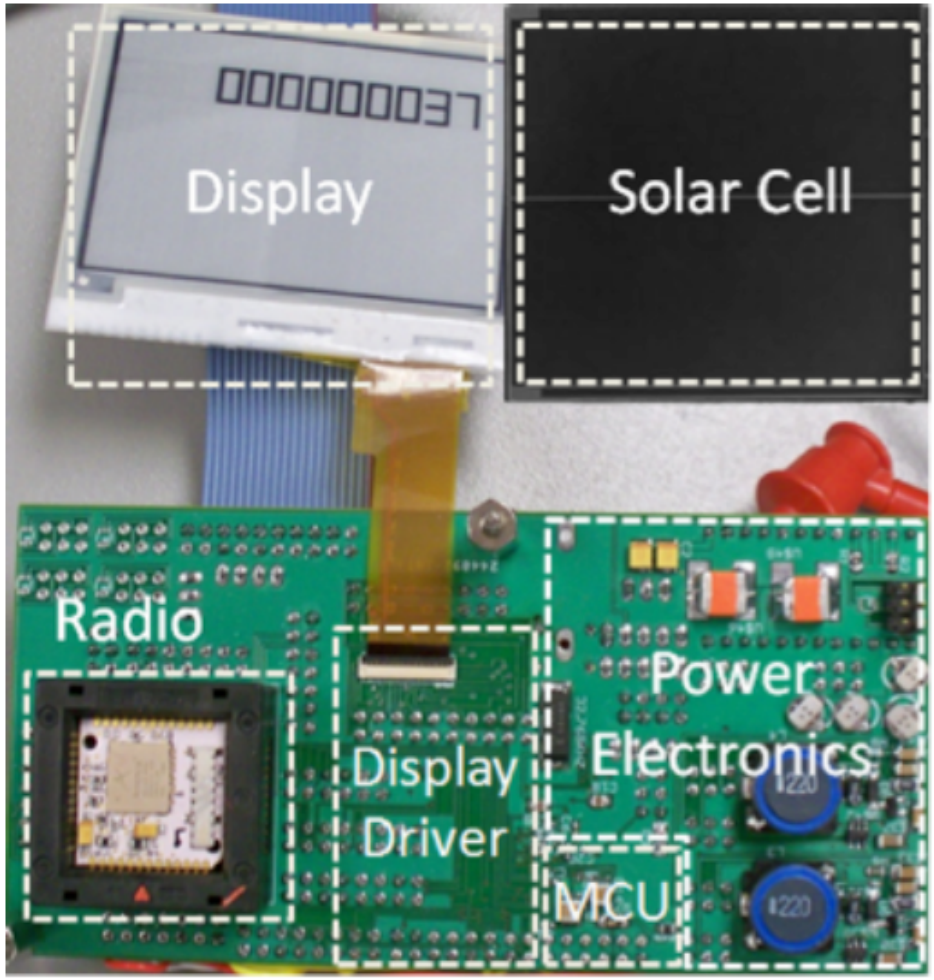

- 3” QVGA Display
  - Requires 5 V, +/- 20 V, etc.
  - Update requires 27.6 mW for 6.61 s (155 mJ)
- Wi-Fi Communication
  - Receives & transmits data
  - Requires 190 mW for 4.10 s (778 mJ)
- Temperature Sensing
  - Thermistor on PCB
  - Requires 11.8 mW for 6.87 ms (81.1 uJ)
- EFM32GG990 MCU
  - 3.3 V
  - 28 nA (92.4 nW) in deep sleep

Display Node Power Transient

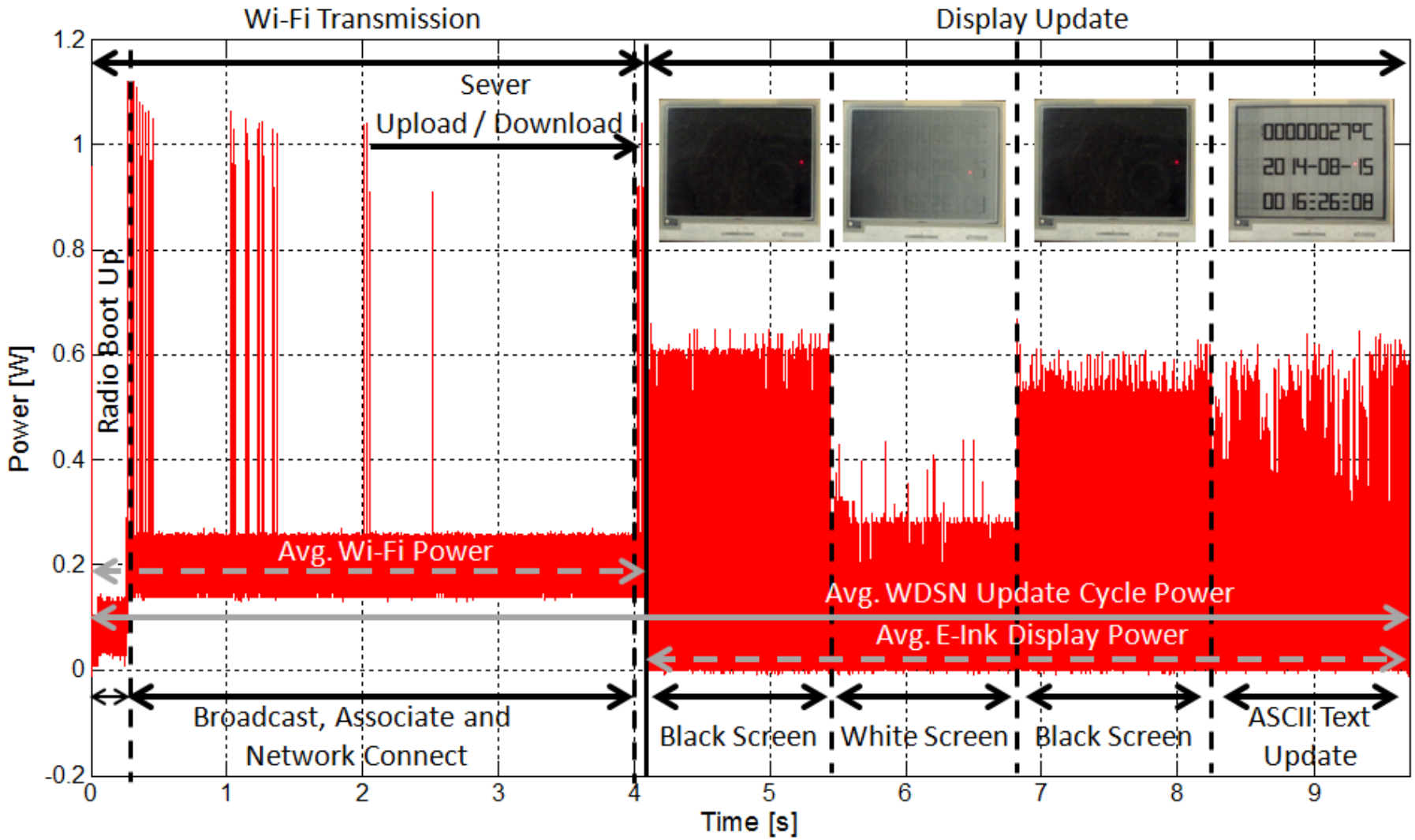

Cardiac Tissue Stimulator Powered By Indoor PV

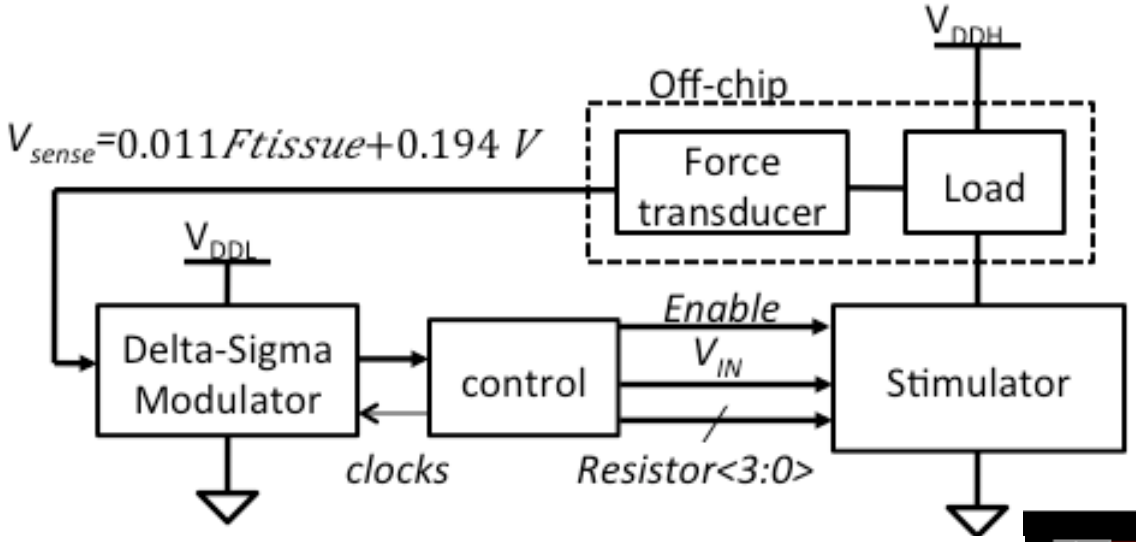

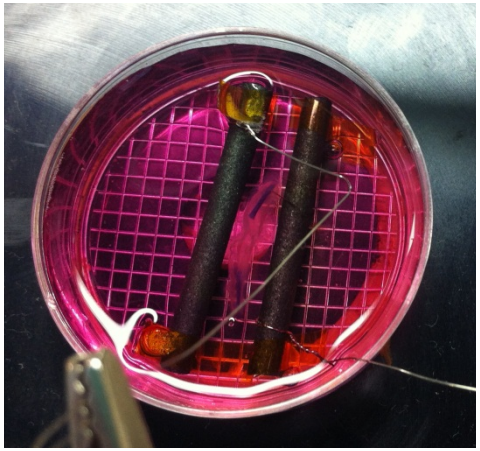

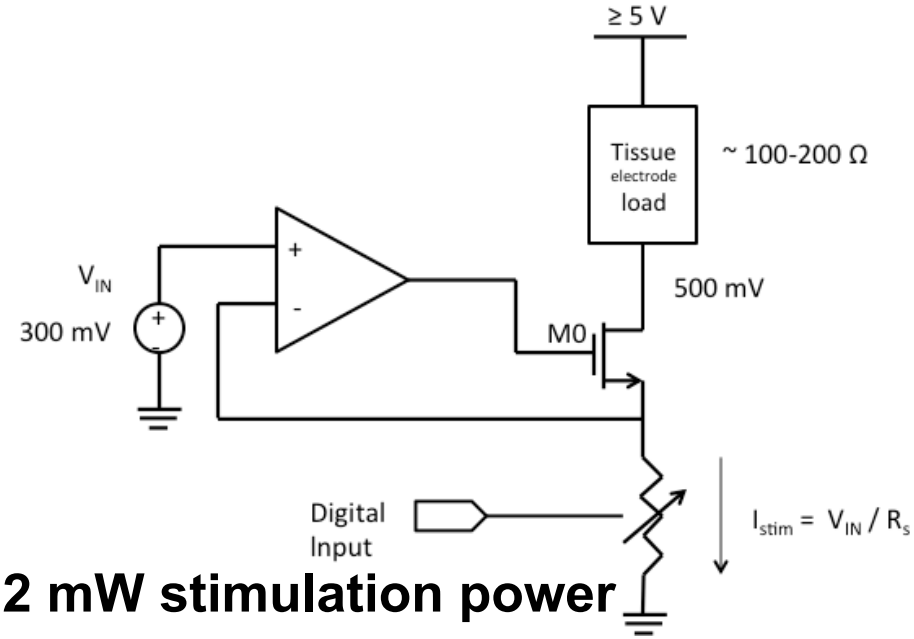

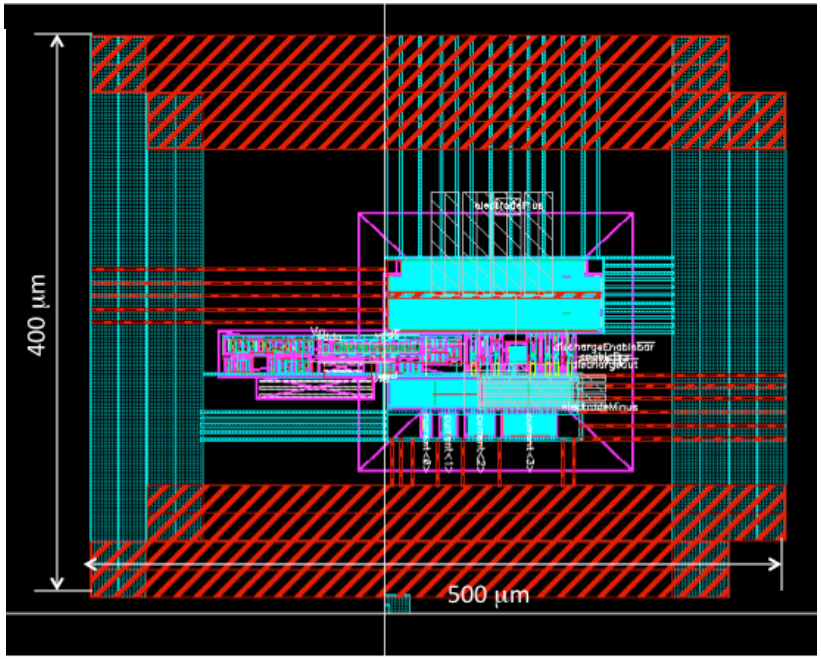

- **13.2 mW stimulation power**

Sensor Data Processing Subsystem

Microcontroller

- Sensor calibration
- DSP configuration
- High active power
- Low duty cycle

DSP Coprocessor

- Continuous sensor data processing (e.g., event detection)
- High duty cycle
- Ultra low active power
- Reconfigurability enables power vs. performance tradeoff

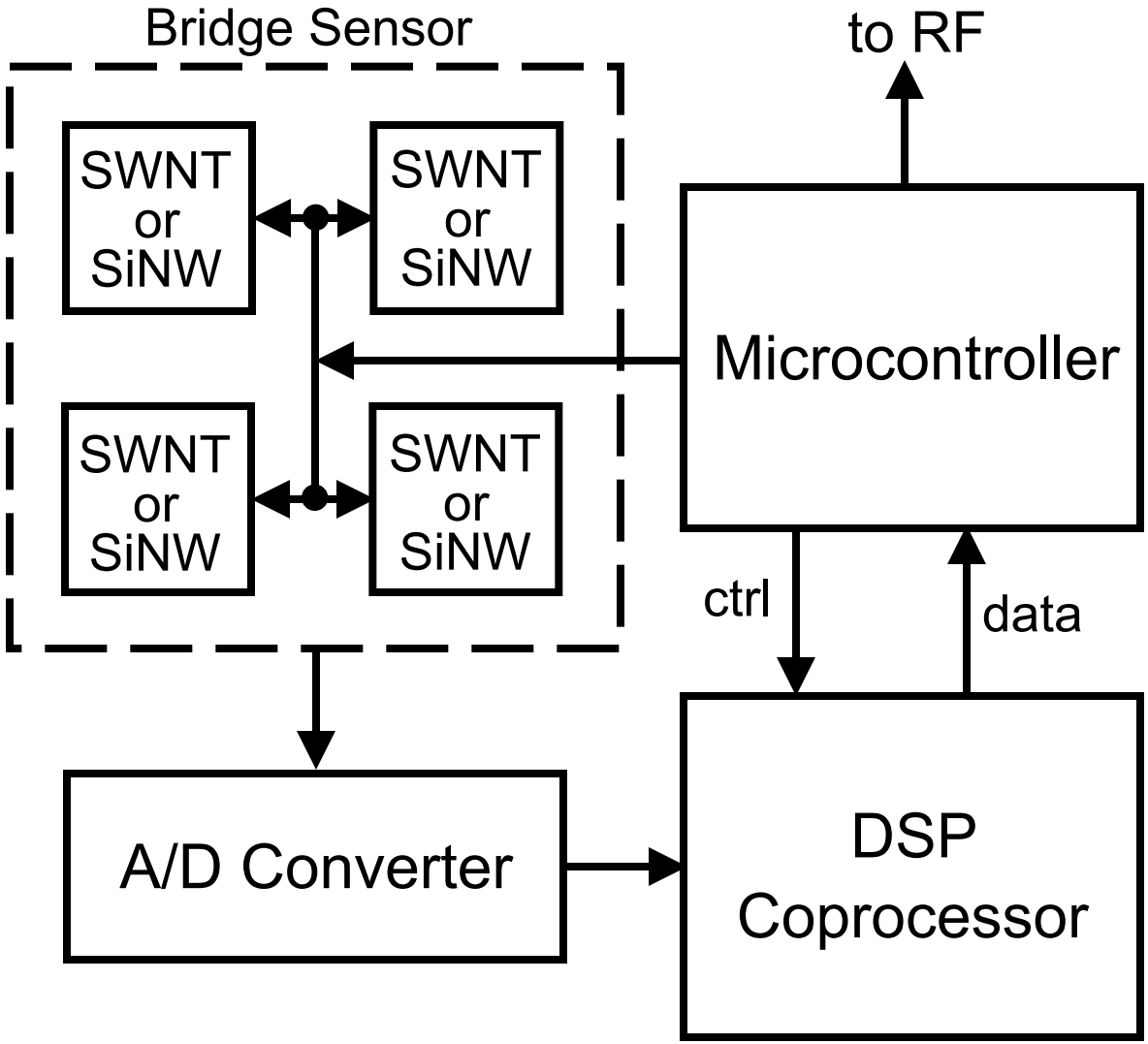

Extending Sensor Node Lifetime

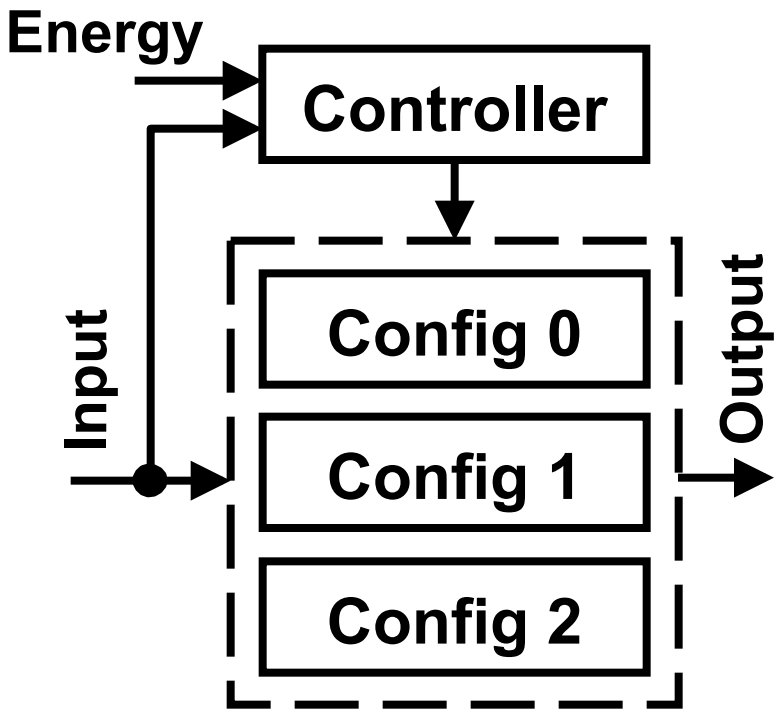

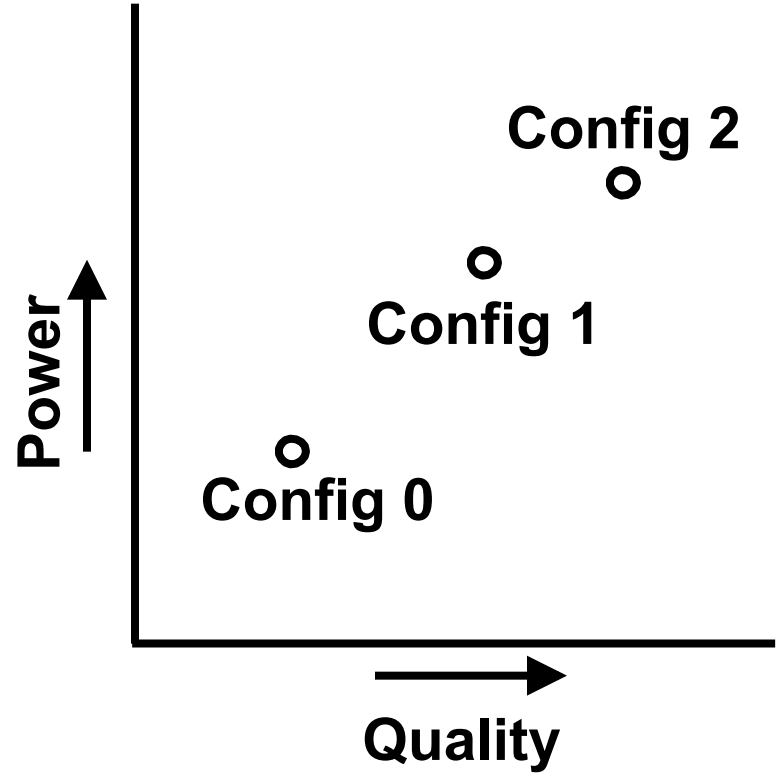

- Controller chooses appropriate configuration based on input, available energy, desired output quality
- Power awareness leads to 60-200% battery lifetime improvement (Bhardwaj TVLSI01)

Energy Scalable DA Array Architecture

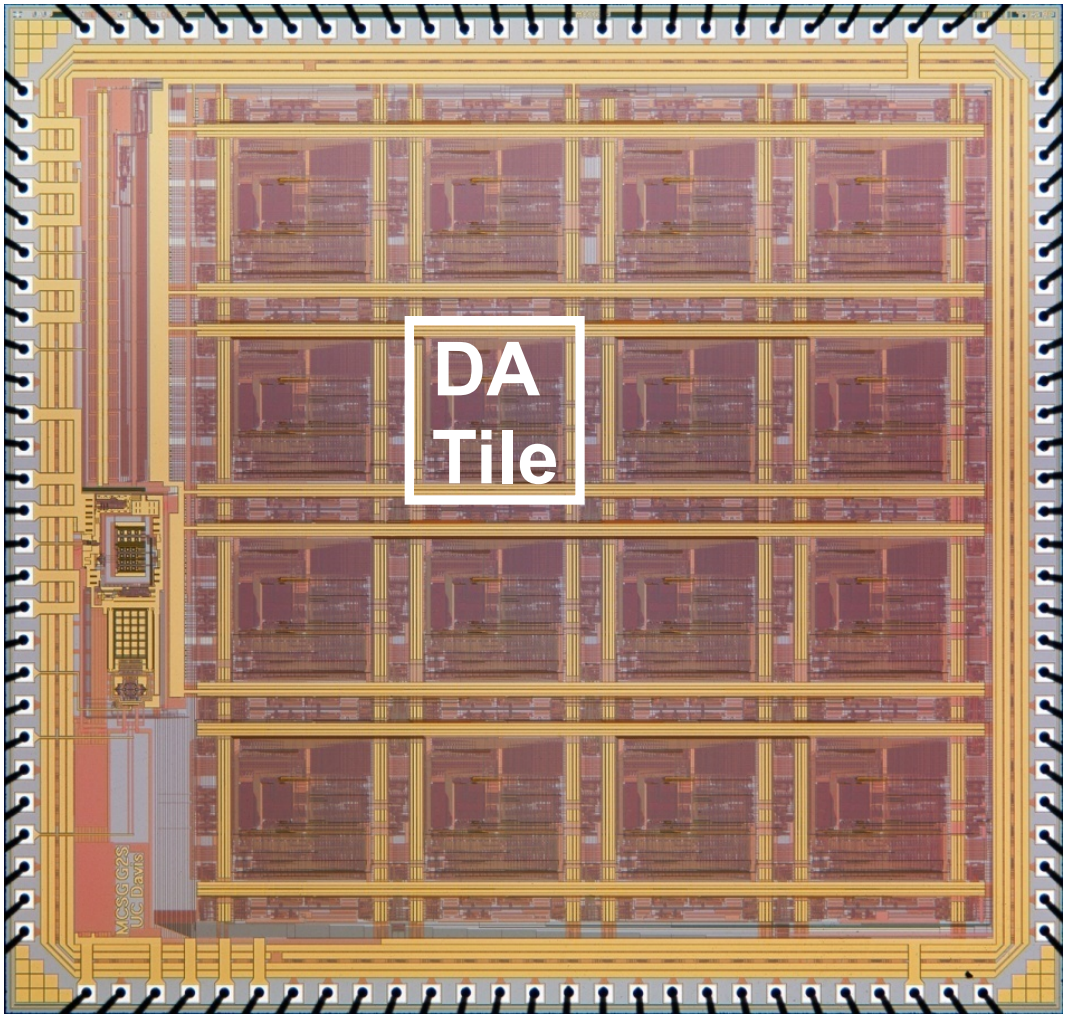

- DA tile functional unit performs energy scalable computation for a set of linear/nonlinear functions
- Low power island-style reconfigurable interconnect permits the direct realization of DSP flowgraphs
- Switch boxes and connection boxes implemented with full transmission gates

Power Scalable FIR Filter Results

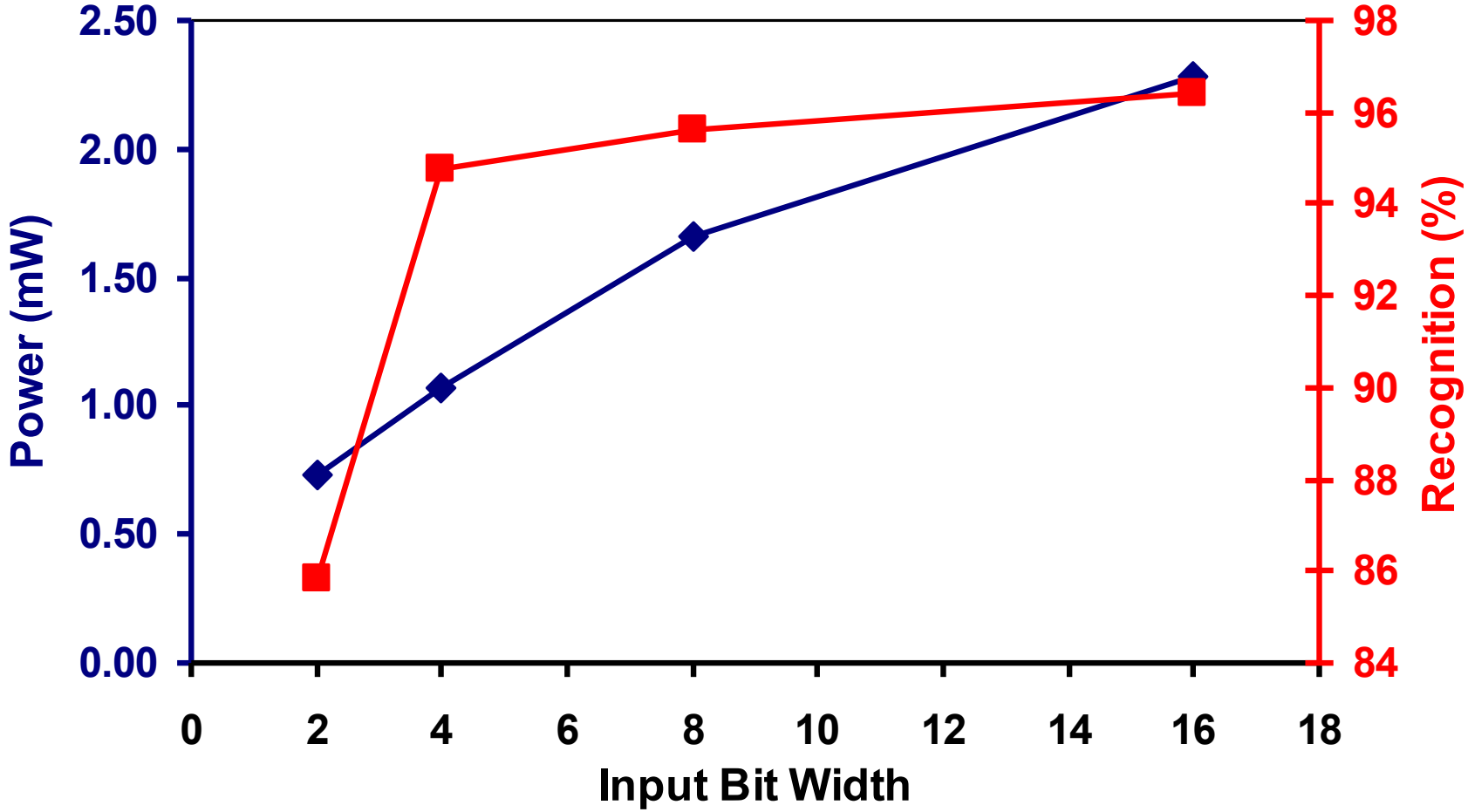

- Simulated power and projected recognition performance for biomedical event detection application

Outline

- Introduction
- System Power Consumption
- <u>Energy Harvesting and Power Management</u>
- Conclusions

Battery Energy Density

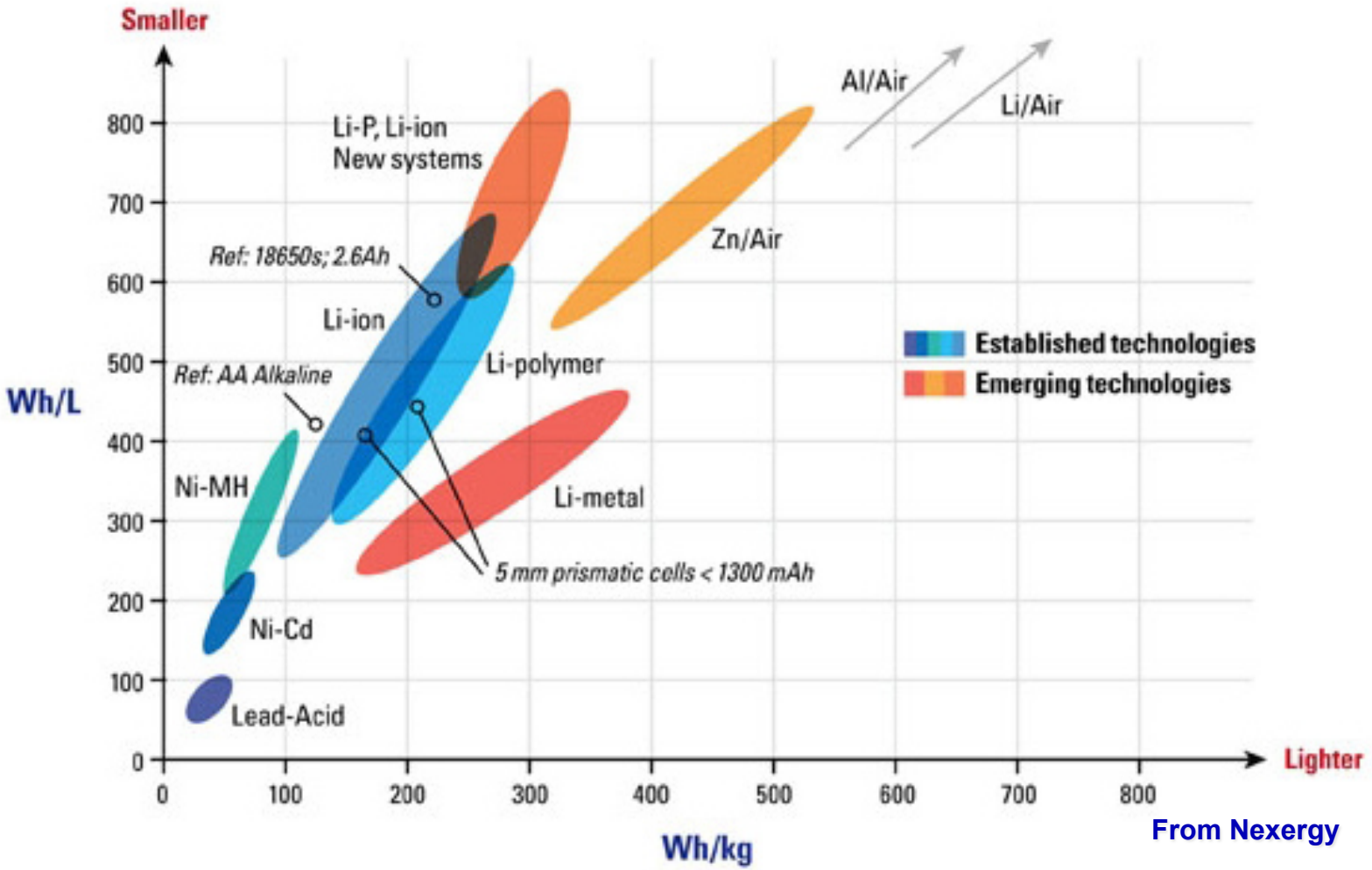

- **Battery energy density increased 3% per year from 1950-2010 (Zu and Li, *Energy Envron. Sci.*, 2011)**

Power and Energy Density

Technology	Conditions	Power Density	Energy Density
Solar	Outdoors Indoors	$20mW/cm^2$ $20\mu W/cm^2$	$73Wh/cm^2$ $73mWh/cm^2$
Thermoelectric	Mounted on Skin	$60\mu W/cm^2$	$219mWh/cm^2$
Vibration (Human)	Piezoelectric Electrostatic Electromagnetic	$67\mu W/cm^3$ $6\mu W/cm^3$ $75\mu W/cm^3$	$245mWh/cm^3$ $22mWh/cm^3$ $274mWh/cm^3$
Ambient RF	Within 3km of TV Antenna General Urban Environment	$0.8\text{-}2.6\mu W/cm^2$ $3nW/cm^2$	$3\text{-}9.5mWh/cm^2$ $11\mu Wh/cm^2$
Broadcast Power	From 3W at 10m	$< 0.294mW$	$< 1Wh$
AAA Battery	Lithium-Ion (not rechargeable)	-	$493mWh/cm^3$
AAA Battery	NiMH (rechargeable)	-	$268mWh/cm^3$

- **Energy density calculated by assuming two hours of harvesting every day for five years.**

Linear Regulator Fundamentals

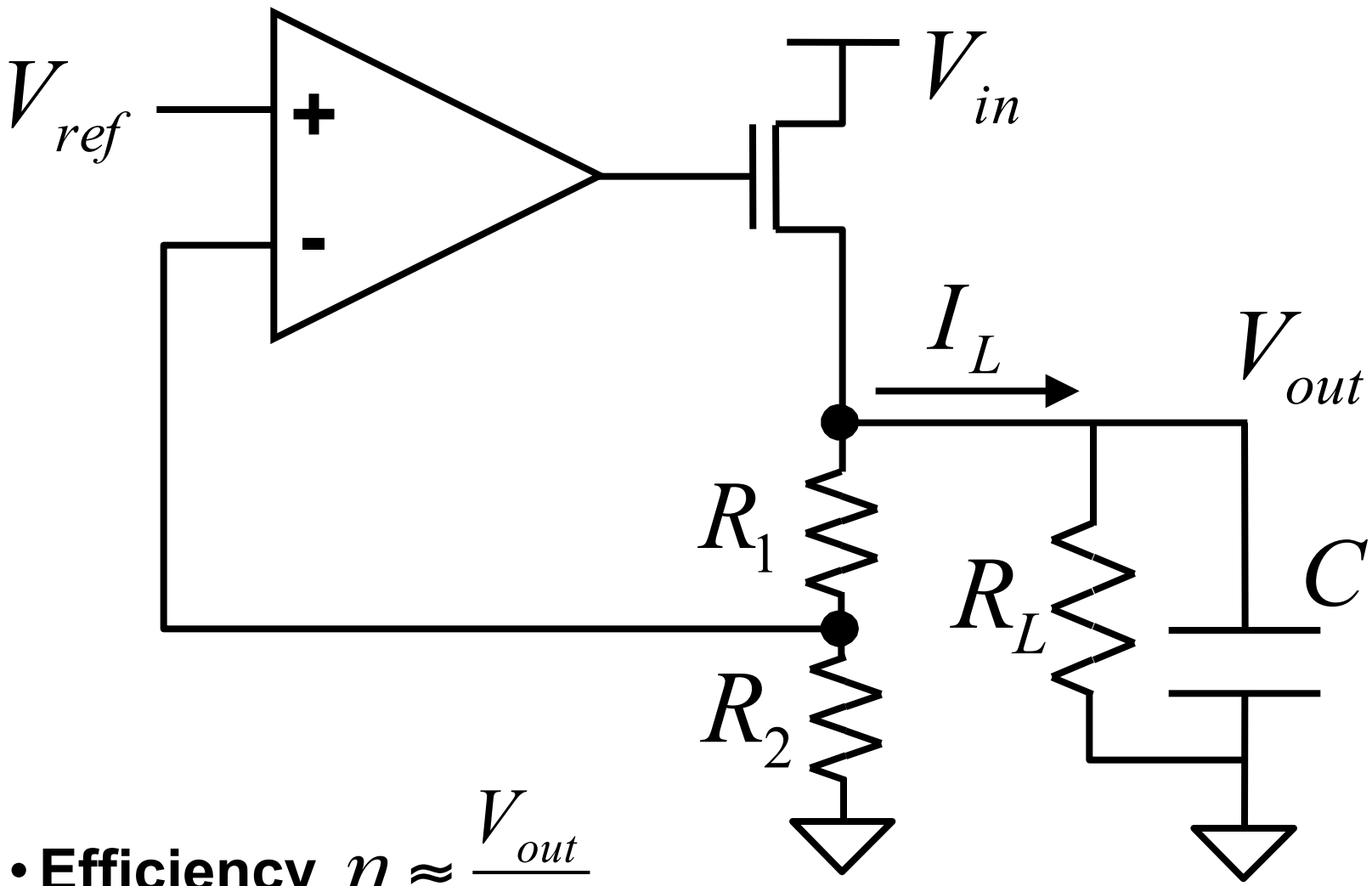

- **Efficiency** $\eta \approx \dfrac{V_{out}}{V_{in}}$

Dynamically Biased LDO Linear Regulator

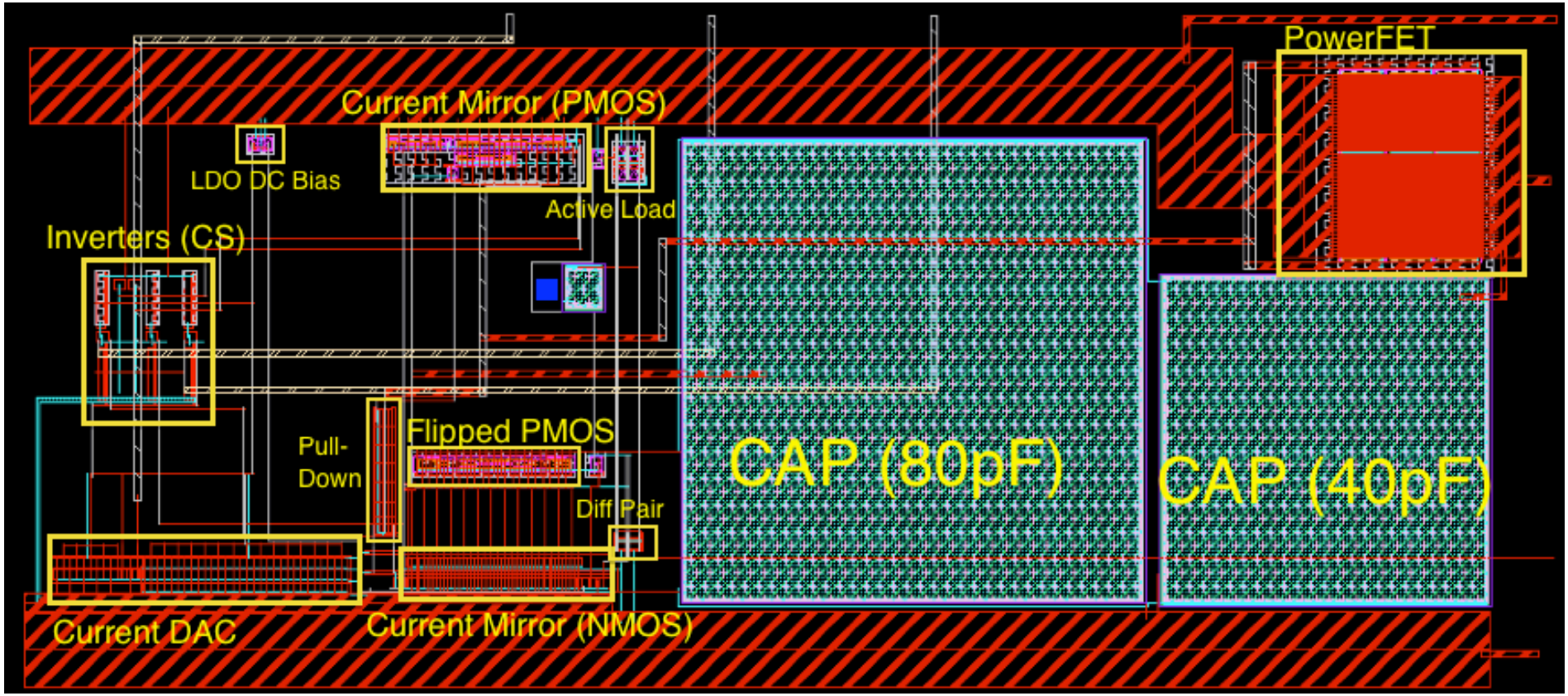

- Output capacitor-less flipped voltage follower architecture
- Dynamic biasing to speed up load response
- Adaptive biasing to improve light load efficiency
- 180 nm CMOS implementation

Integrated Photovoltaics

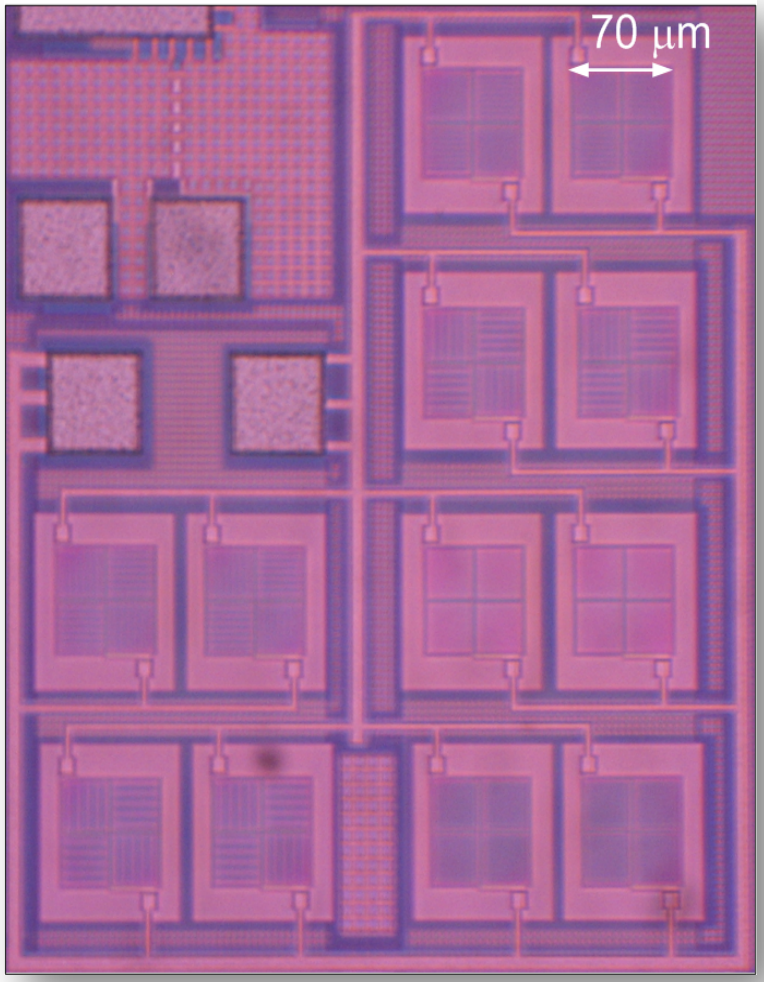

90nm CMOS PV Array

- **On-die PV array using CMOS passive pixels**
- **Characterized across multiple process nodes**
- **Metal "gratings" can concentrate light**
  - Improve indoor harvesting efficiency
  - Expand range of incident angles

Integrated PV Performance Across Process

Technology	0.35 μm P+/ NW	90 nm P+/ NW	180 nm P+/ NW	180 nm PW/ DNW
Illumination	20 kLux	20 kLux	17 kLux	17 kLux
Voc	533 mV	486 mV	523 mV	508 mV
Isc density	680 $\mu A/mm^2$	824 $\mu A/mm^2$	134 $\mu A/mm^2$	52 $\mu A/mm^2$
Power Density	225 $\mu W/mm^2$	325 $\mu W/mm^2$	56 $\mu W/mm^2$	21 $\mu W/mm^2$
Figure of Merit (FF)	0.66	0.8	0.8	0.81

- **Area for 5 μW = 164 μm x 164 μm (0.35 μm), 124 μm x 124 μm (90 nm)**

Switched-Capacitor Boost Converter

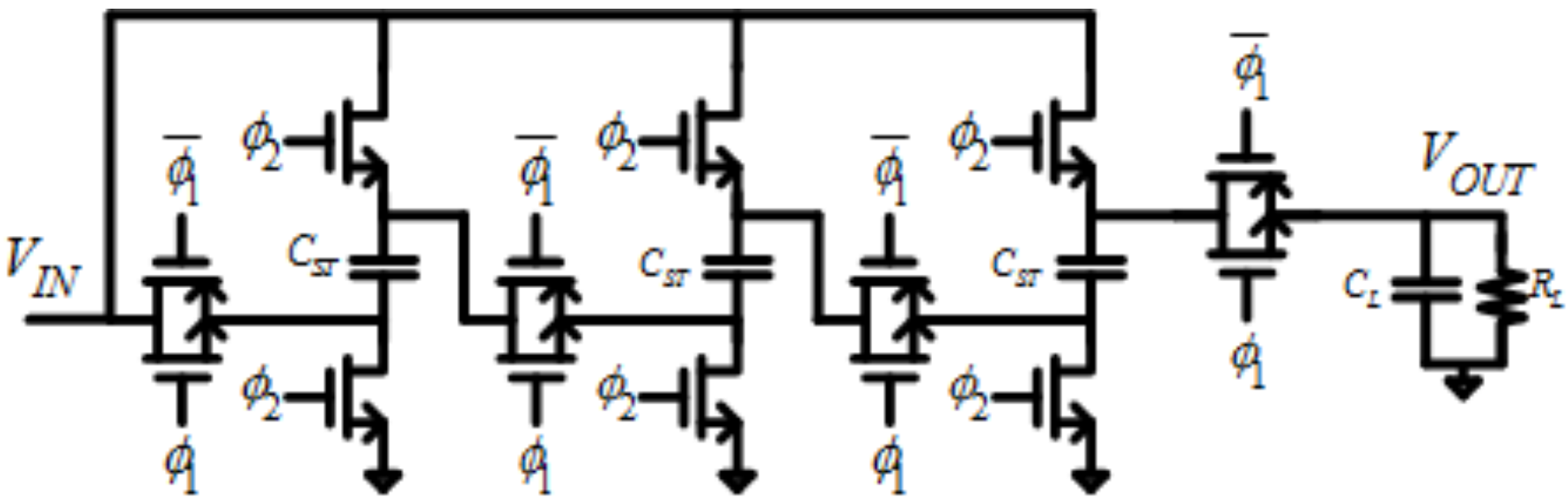

- **Phase 2 – Charge capacitors to VIN**
- **Phase 1 – Boost output to 4x VIN**

Switched-Capacitor Boost Converter

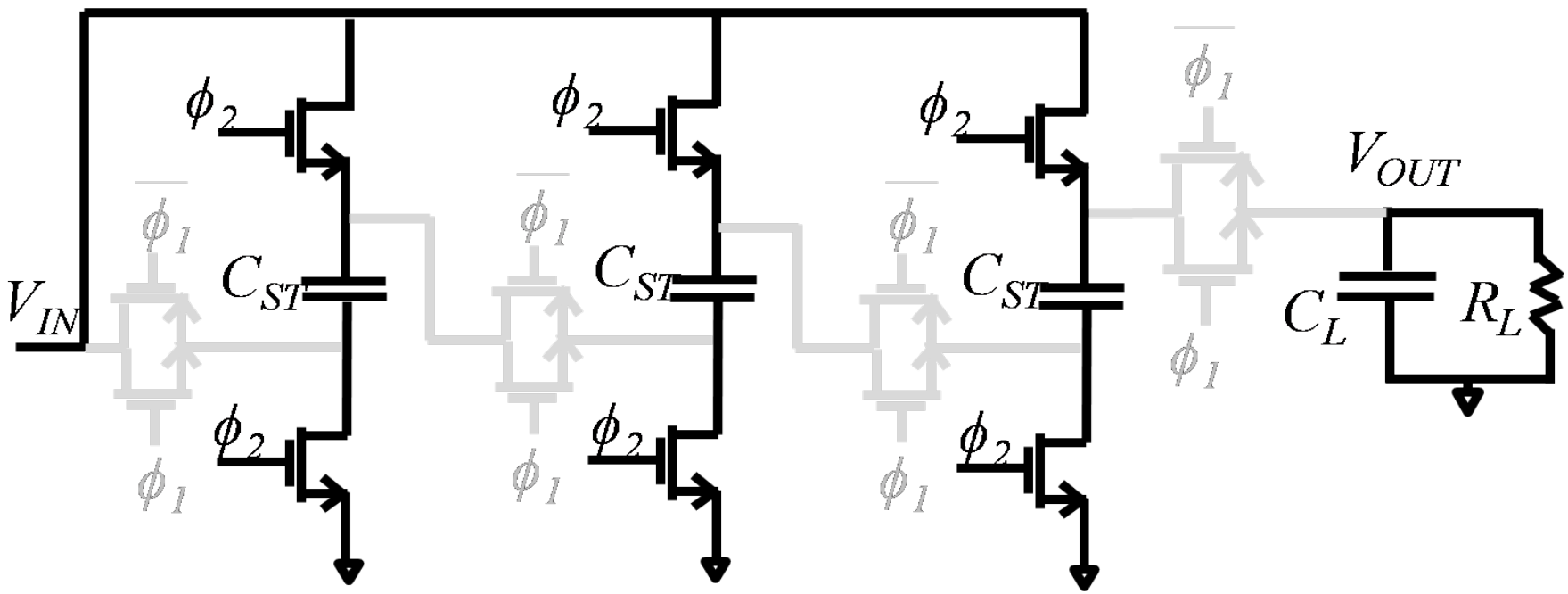

- **Phase 2 – Charge capacitors to VIN**
- **Phase 1 – Boost output to 4x VIN**

Switched-Capacitor Boost Converter

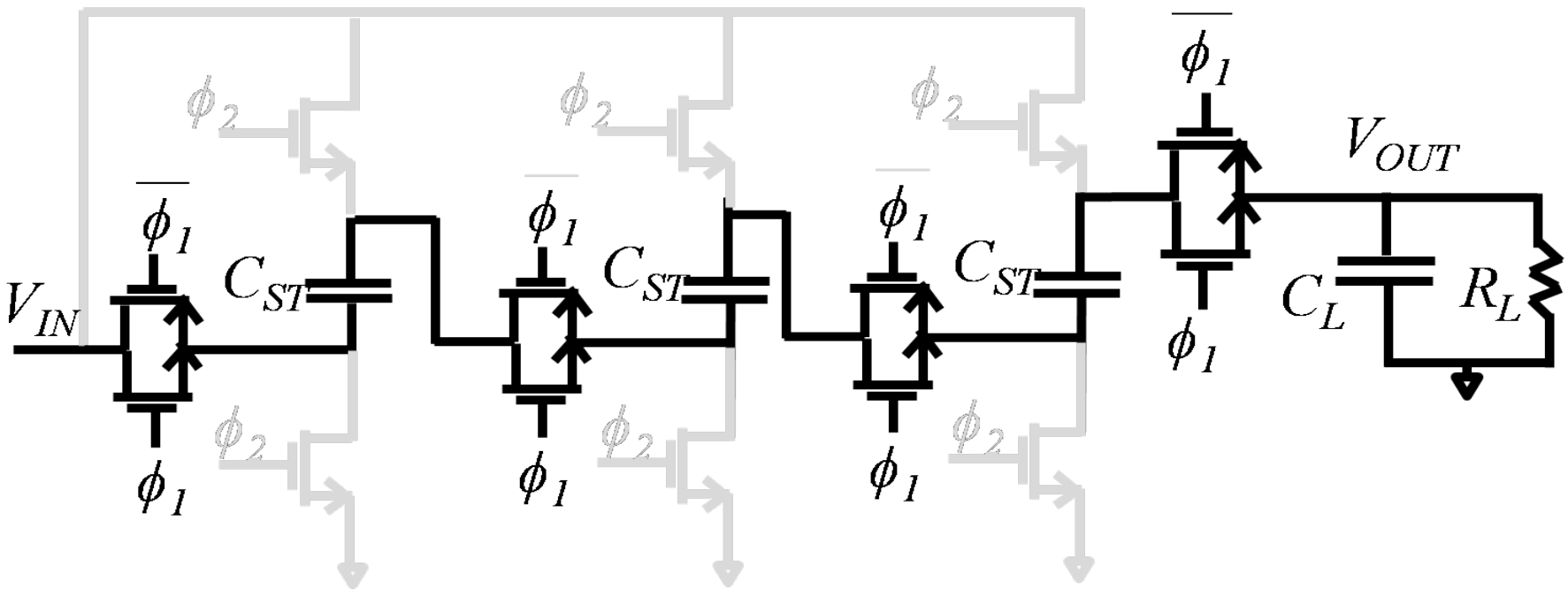

- **Phase 2 – Charge capacitors to VIN**
- **Phase 1 – Boost output to 4x VIN**

Integrated PV SC Boost Conversion

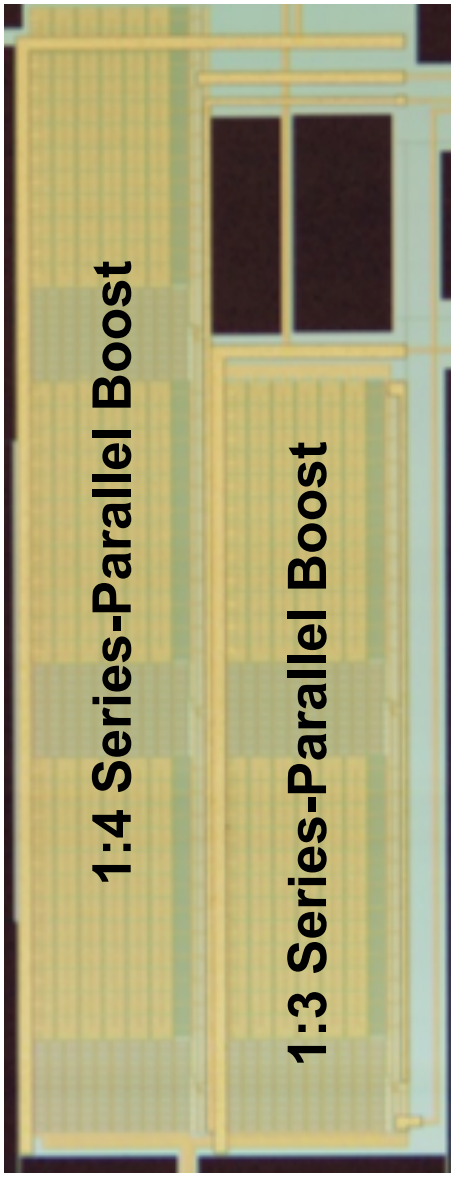

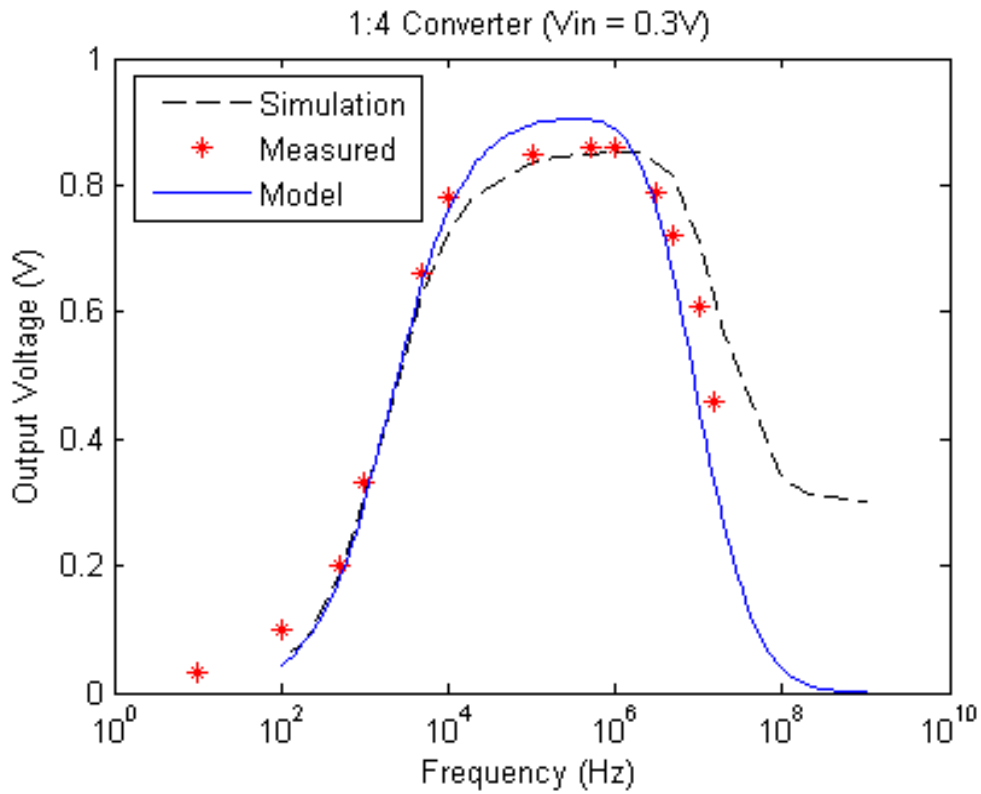

- **Switched capacitor boost converters for integrated PV with 1.2 μW output power**
  - Fully integrated MIM flying caps
  - 180 nm CMOS
  - Accurate parasitic models developed

Electromagnetic Harvester Characterization

Walking Experiment Test Fixture

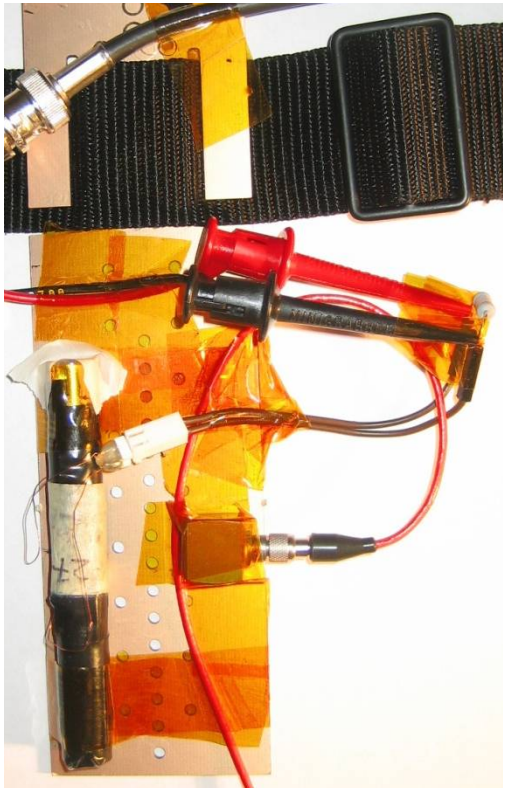

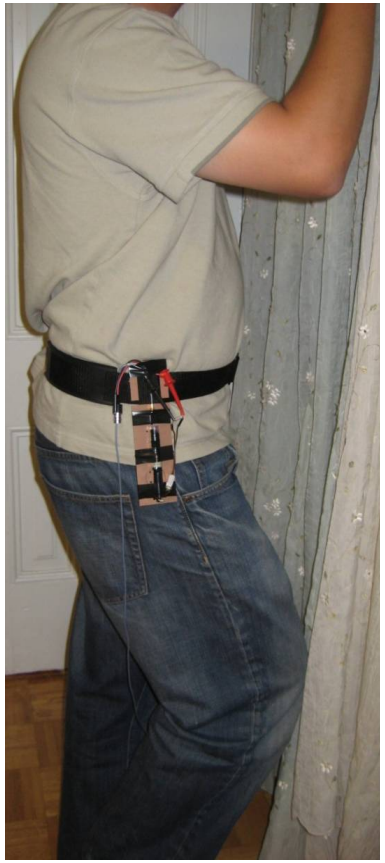

Results

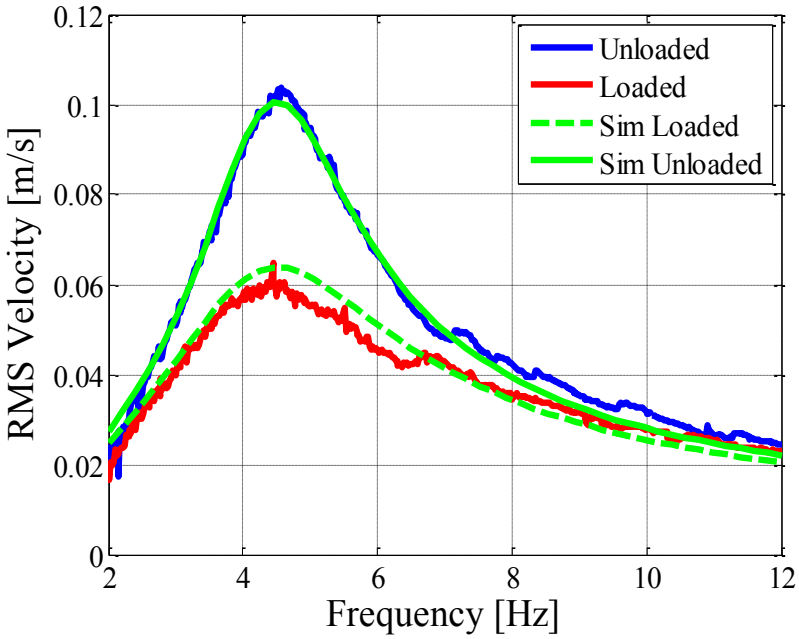

- **38μW output power (neglecting conversion losses)**

Multi-Electrode Piezoelectric Generator

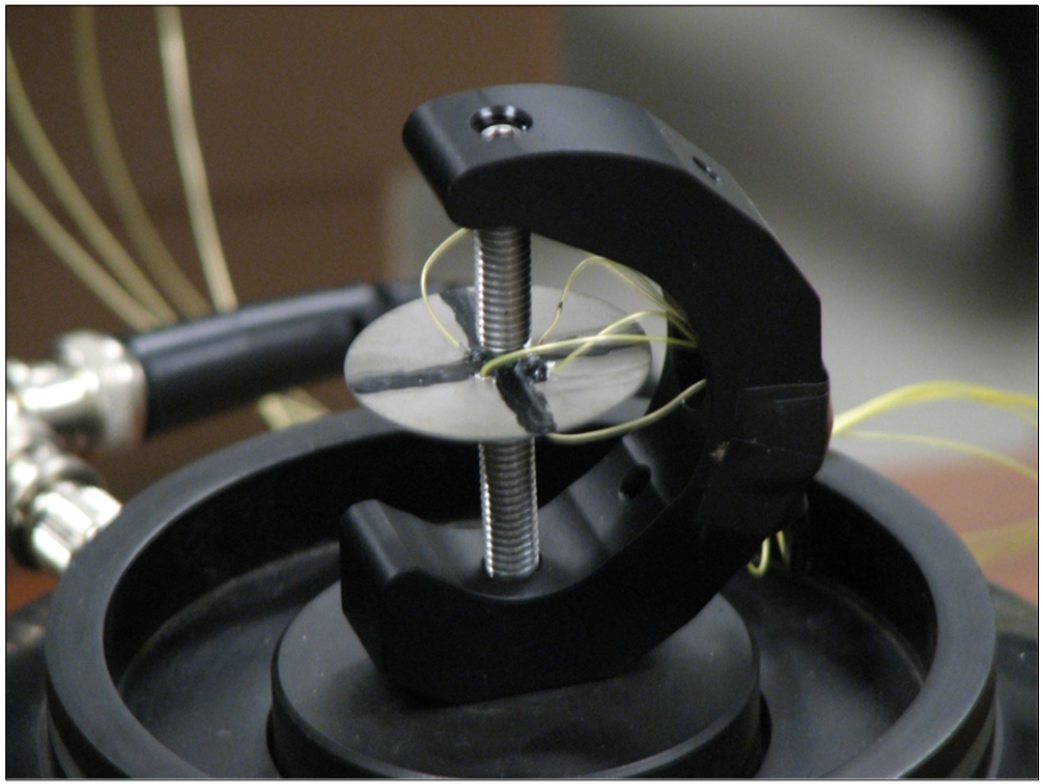

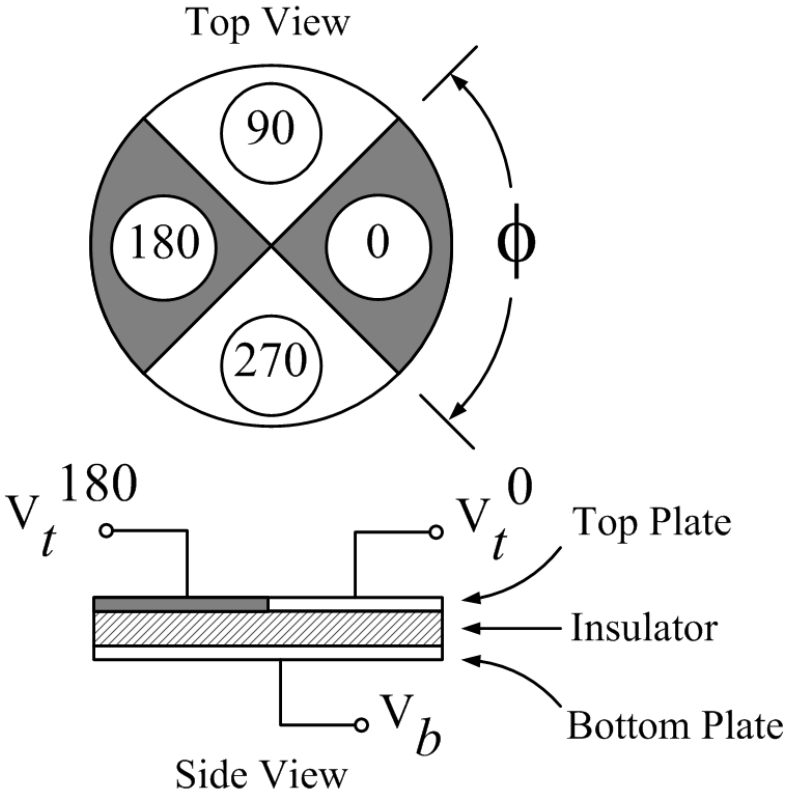

- **PZT (lead zirconate titanate) disk diameter = 1.5”, top plate divided into quarter-circle sections, bottom plate not divided, yielding 5 electrodes in total**
- **Multiple mechanical resonances means more efficient harvesting from random or time-varying vibrations**
- **78μW output power at 615Hz after AC/DC conversion**

Full Wave CMOS Controlled Rectifier

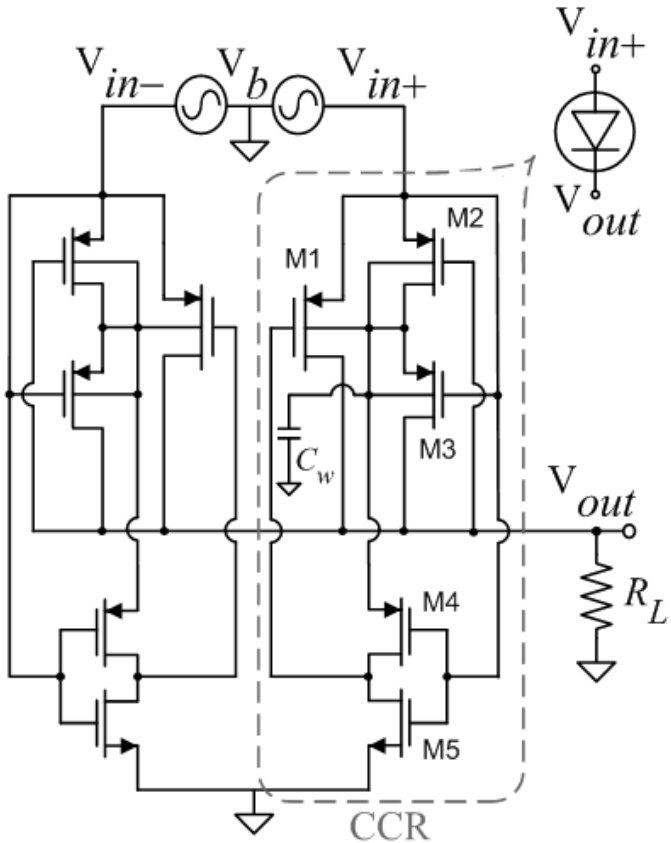

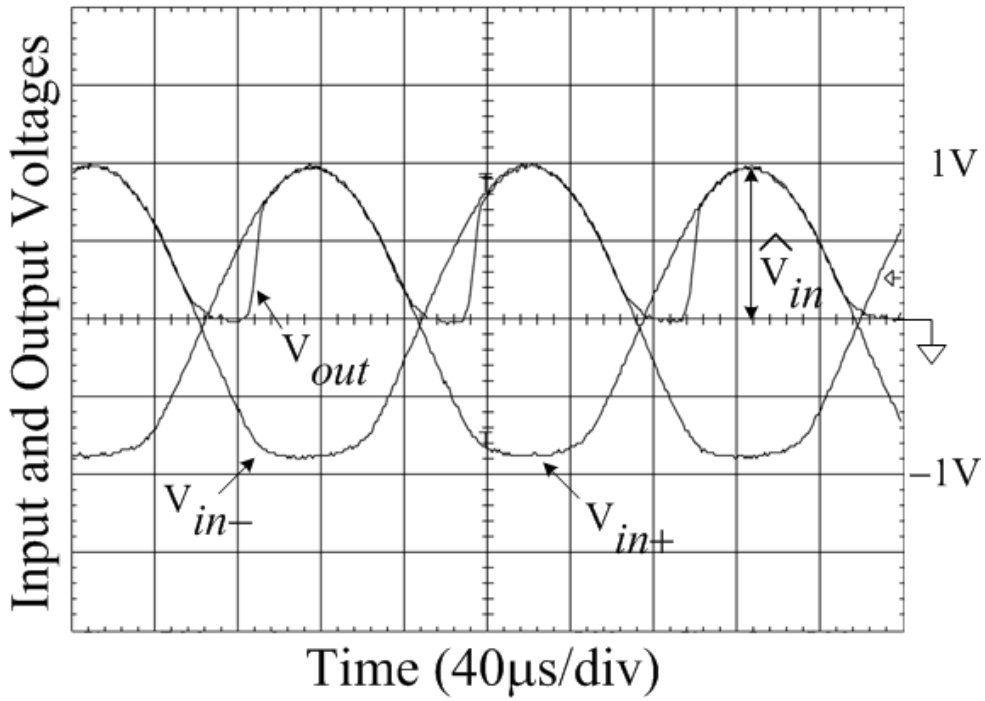

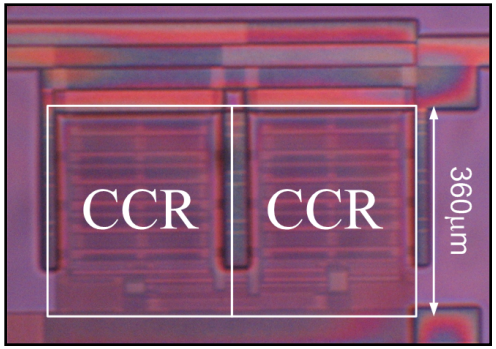

- **Constructed in 0.35 μm CMOS**
- **PMOS power FET width = 500 μm**
- **Up to 98% power efficiency**

Frequency Variation With AC Supply

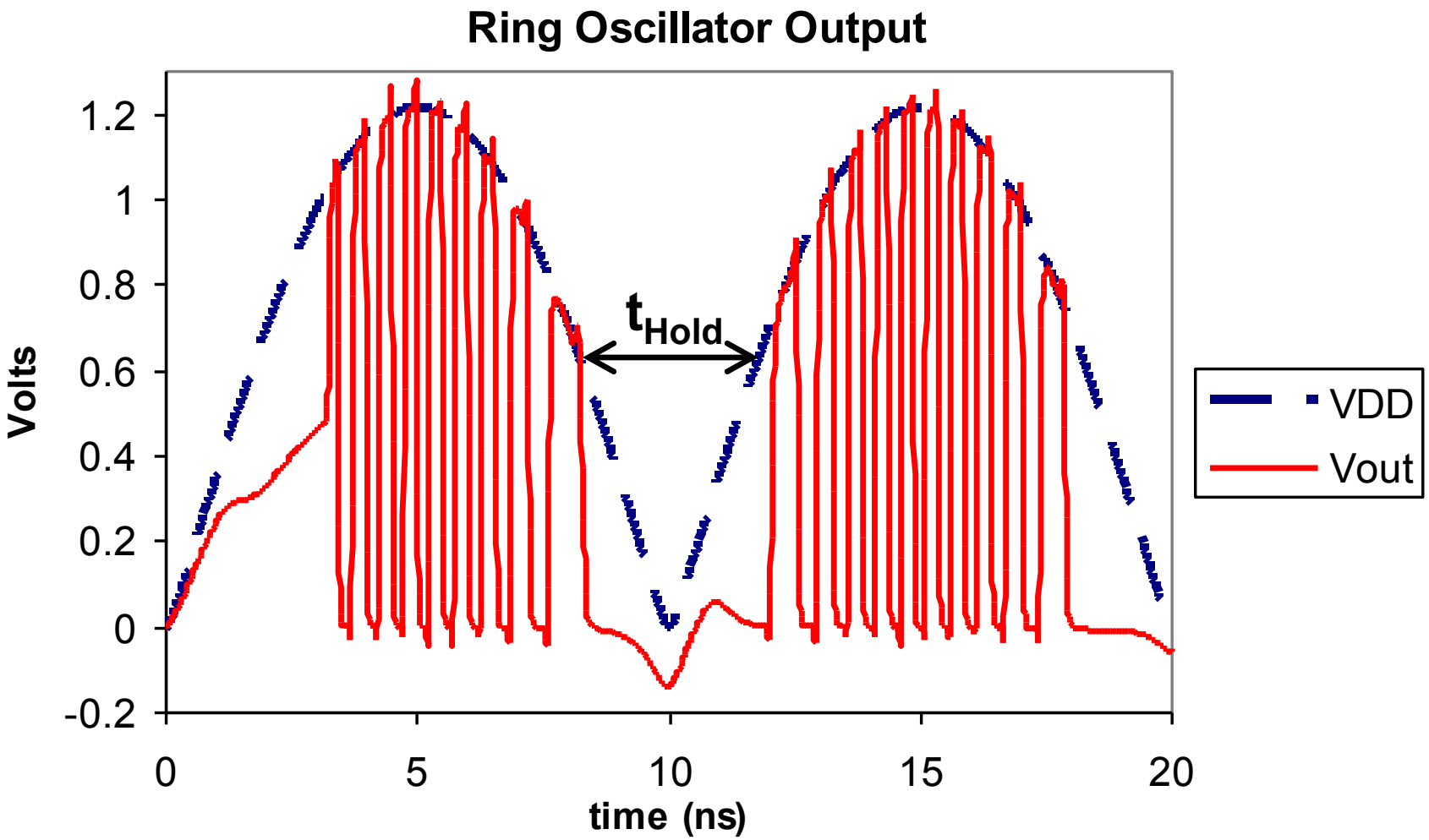

- **Self-timed datapath must be initialized at power-on**
- **Must maintain state across power supply cycles**

Measured Frequency Variation with AC Supply

- **Ring Oscillator Frequency Varies**
- **Arbitrary Wave Form Generator Output Used For AC Input**

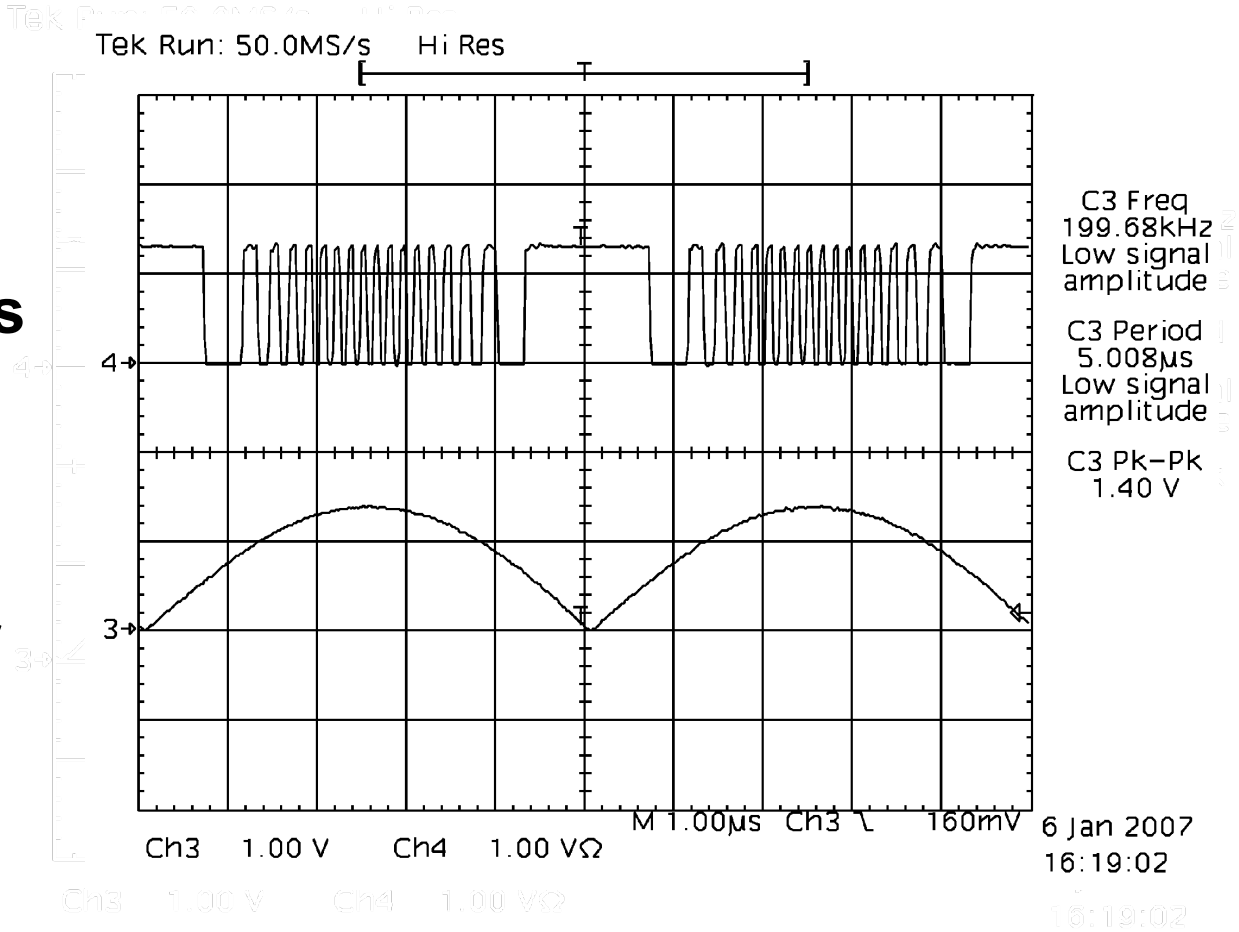

Die Photo and Summary

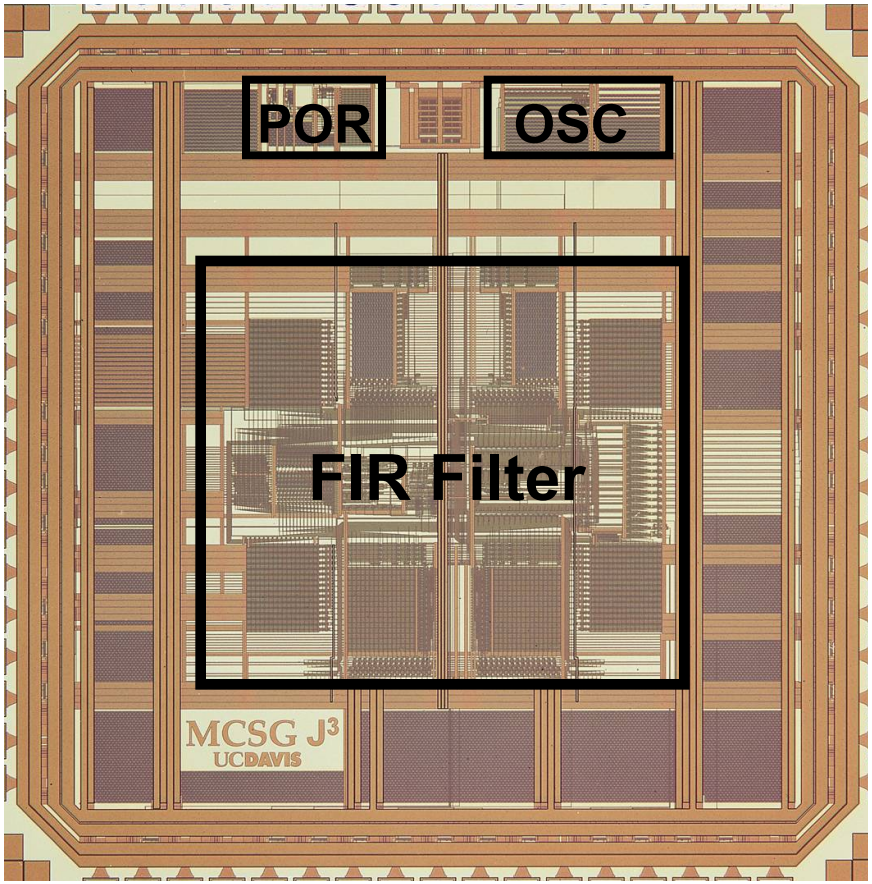

Technology	180 nm CMOS
Dimensions	2.6 mm x 2.6 mm
Transistors	135K
I/O V_{DD}	1.8 V
AC Supply (V_{PP} = 1.8 V)	60 Hz – 1 kHz
Core Freq. (max)	75.6 MHz
Power (Core)	127 – 113 μW

- Published Symposium on VLSI Circuits, 2007

Multiple-Input Power Management Unit

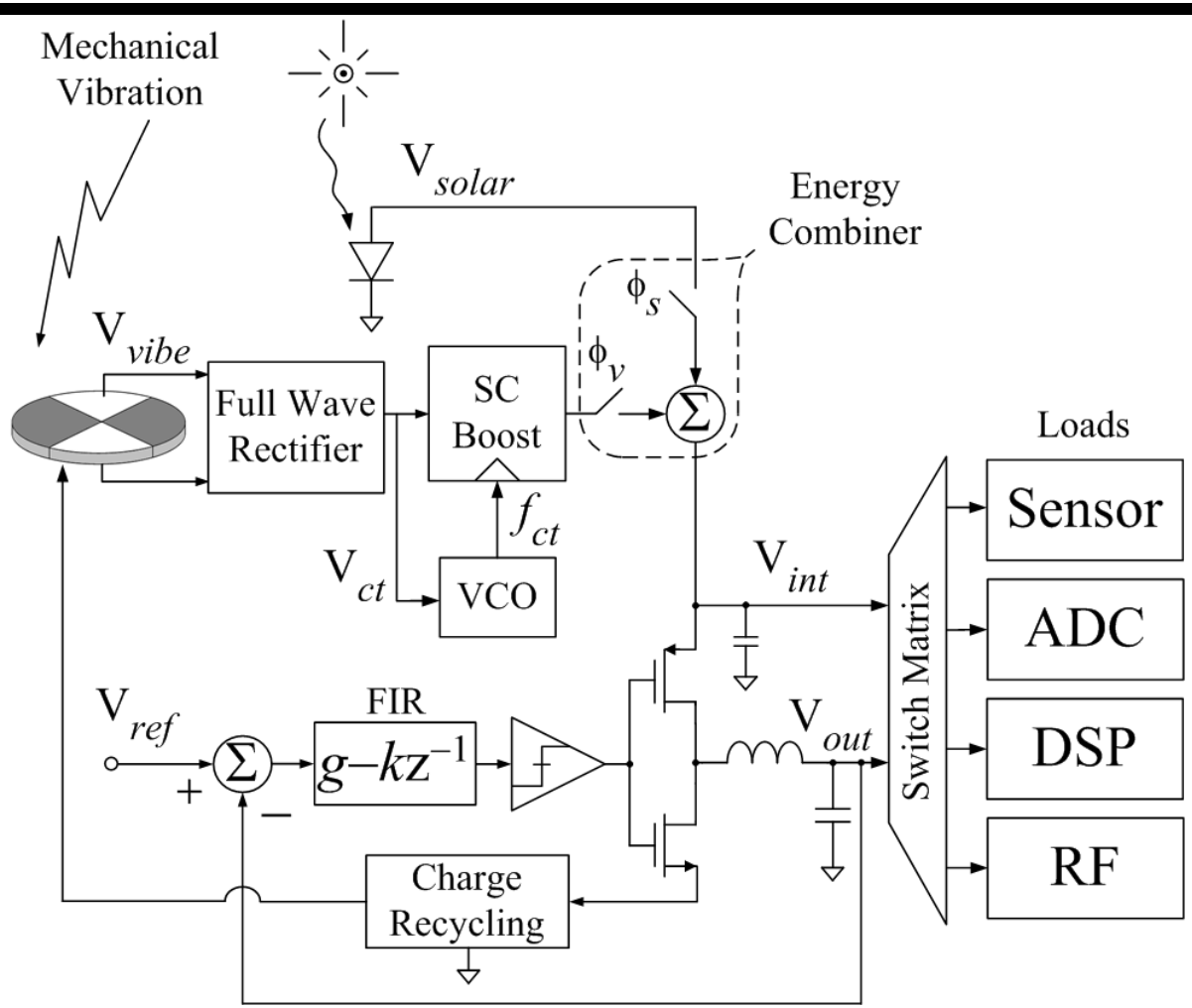

- **AC/DC combines a rectified V_{vibe} with V_{solar}**
- **DC/DC further smoothes harvested energy to form V_{out}**

Multiple-Input Power Management Unit

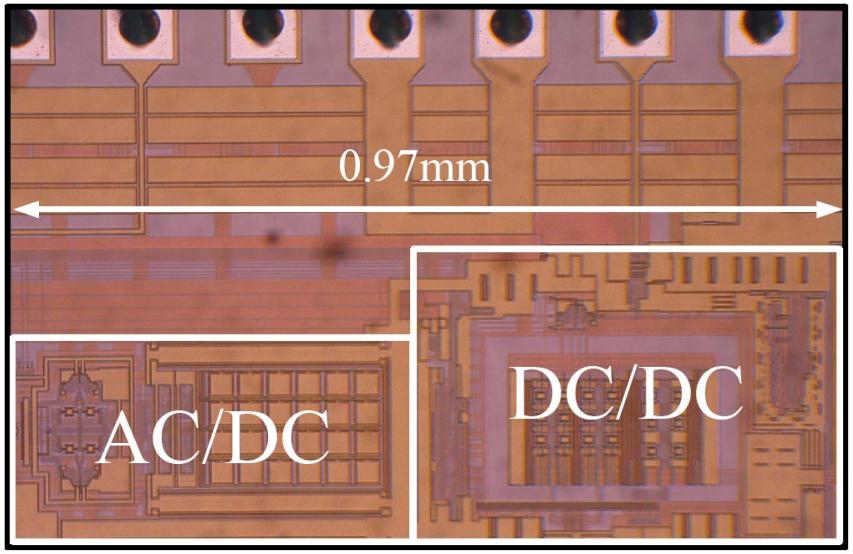

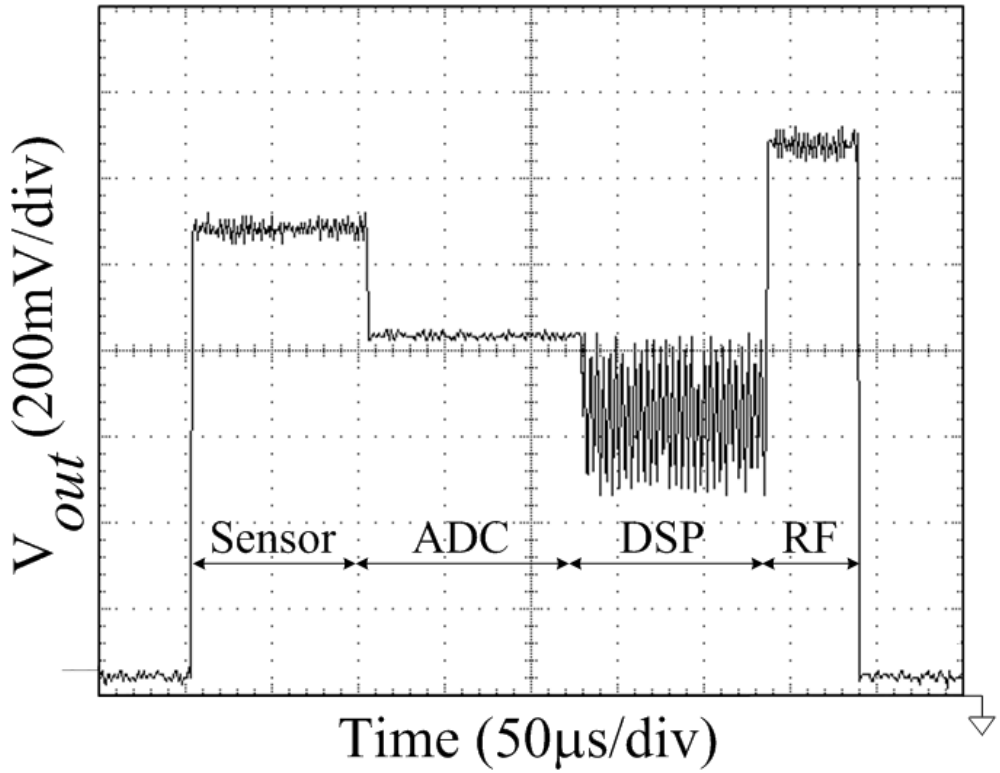

- DC/DC output controller switches between functional blocks
- DSP tolerates high ripple, so the controller trades efficiency for ripple
- 0.25 μm CMOS
- Low quiescent current version in 180 nm CMOS under development

Outline

- **Introduction**
- **Energy Scalable Computation**
- **Energy Harvesting and Power Management**
- **<u>Conclusions</u>**

Conclusions

- **Energy harvesting for wireless sensors is made practical by leveraging low performance demands**
- **Energy and voltage scalable digital and mixed-signal circuits and architectures crucial for energy harvesting systems**
- **Managing peak (10 mW – 3 W) and average (1 μW – 1 mW) power essential**
- **Exploiting the AC nature of mechanical vibration energy harvesting using self-timed circuits and dynamic memory can improve total system efficiency**
- **Integrated DC/DC conversion can reduce power and cost**

Acknowledgments

- Scott Block
- Jamie Collier
- Erin Fong
- Liping Guo
- Nate Guilar
- Stanley Hsu
- Vipul Jain
- Mackenzie Scott
- Jeff Siebert
- Justin Wenck
- Kameron Zhou
- Greg Winter, TI
- Prof. Diego Yankelevich, UCD
- Prof. Paul Hurst, UCD

- National Science Foundation CAREER Award
- FCRP Interconnect Focus Center
- Xilinx University Program and Xilinx Research Labs
- U.S. Dept. of Education GAANN Fellowship
- Texas Instruments