INTERNATIONAL JOURNAL OF COMMUNICATION SYSTEMS
Int. J. Commun. Syst. 2017; **00**:1–12
Published online in Wiley InterScience (www.interscience.wiley.com). DOI: 10.1002/dac

White Broadband Power Line Communication: Exploiting the TVWS for Indoor Multimedia Smart Grid Applications

Mohammad Heggo[12*†], Xu Zhu[1], Sun Sumei[2], Yi Huang[1]

[1]*Department of Electrical Engineering and Electronics, University of Liverpool, Brownlow Hill, Liverpool, United Kingdom.*
[2]*Institute for Infocomm Research, Agency for Science, Engineering and Research (A*STAR), 1 Fusionopolis Way, Singapore*

SUMMARY

Balancing the energy production and consumption in smart grids influences the integration of new high speed communication technologies, to support monitoring services. Sharing the television (TV) white space (TVWS) spectrum between licensed and unlicensed users has been recommended by the federal communications commission (FCC) in 2004. FCC allows the unlicensed users to access both the very high frequency (VHF) and the ultra-high frequency (UHF) channels in TVWS. On the other hand, broadband power line communication (BPLC) has drawn the researchers' attention over the last decade as a high speed indoor communication technology. One application for BPLC is the multimedia service in smart grid applications. In this article, we present an overview of the standards, regulations and channel models of the TVWS and BPLC as two separate technologies. We then propose the deployment of the BPLC technology in the TVWS VHF band to build up the white BPLC (WBPLC) communication systems. The WBPLC incorporates the TVWS and the BPLC technologies into multiple-input multiple-output (MIMO) communication systems in the VHF band. The simulation results show significant throughput enhancement in the WBPLC over both the TVWS and BPLC communication systems, indicating that WBPLC can be a promising technology to serve the growing needs for the multimedia services in future smart grids. Copyright © 2017 John Wiley & Sons, Ltd.

Received . . .

KEY WORDS: Power line communication, Cognitive radio, Smart grid, MIMO, VHF.

1. INTRODUCTION

In smart grid, wireless sensor and actuator networks (WSANs) are used to monitor and control the energy consumption of home users. In WSANs, cameras and acoustic sensors are connected to improve the reliability and efficiency of the smart grid systems, which increases the demand for multimedia smart grid communication infrastructure [1]. In order to fulfill the high data rate services in future smart grid networks, the demand for radio spectrum grows rapidly. On the other hand, vast measurement data have shown that the scarcity problem in the radio spectrum is mainly caused by inefficient spectrum utilization. For example, the results of spectrum occupancy measurements in [2–6], which were held in different countries show that the radio spectrum occupancy level does not exceed 25%. This yields more attention towards cognitive radio solution, which allows the unlicensed users to access licensed spectrum without causing harmful interference to the incumbent licensed users.

*Correspondence to: Department of Electrical Engineering and Electronics, University of Liverpool, Brownlow Hill, Liverpool, United Kingdom.
†Email: m.heggo@liverpool.ac.uk

In May 2004, the federal communications commission (FCC) recommended the cognitive access of the temporally or geographically underutilized channels in the television (TV) spectrum known as TV white space (TVWS) [7]. In November 2008, the FCC released the regulatory rules which allow the unlicensed users (known as secondary users (SUs)) to utilize the very high frequency (VHF) band (30 MHz - 300 MHz) and the ultra-high frequency (UHF) band (300 MHz - 3 GHz) in the TVWS [8]. The regulations guarantee maximum protection for the primary users (PUs), which can be translated to more spectrum access restrictions on the TV band devices (TVBDs). The TVBDs shall acquire a detailed map for the free TVWS spectrum within a certain geographic area and time slot through geolocation database access and/or spectrum sensing techniques. Following the FCC regulation, other international organizations such as the institute of electrical and electronics engineers (IEEE) [9] and the European computer manufacturers association (ECMA) [10] began the journey to define the physical (PHY) and the medium access control (MAC) layers standards for the TVWS communications.

Another technology that spans the VHF band is broadband power line communication (BPLC) [11]. The BPLC technology relies mainly on transmitting the data over the existing power line cables, hence offers a cost-effective solution. However, power line cables are not designed for high speed communications. The broadband signal therefore suffers radiation especially in the VHF band. This can yield an electromagnetic interference (EMI) with the existing wireless services [12–14]. To prevent from severe EMI, the transmission power spectral density (PSD) of the BPLC in the frequency band below 30 MHz is restricted to -55 dBm/Hz, and above 30 MHz to -85 dBm/Hz, respectively according to both the IEEE 1901 [15] and the HomeplugAV2 [16] standards. The strict restriction over the PSD of the BPLC in the VHF band limits the maximum achievable throughput in that band.

In this article, an overview of the main regulations and standards of both TVWS and BPLC technologies is presented. Also, the channel characteristics of the wireless TVWS and the BPLC in the VHF band are shown. The aim of the presentation is to highlight the advantages and the limitations of each technology, and at the same time highlight the fact that the advantages of one technology may be used to overcome the limitations in the other one. We are hence motivated to propose a new hybrid point to multi-point TVWS BPLC system, referred to as white BPLC (WBPLC). The WBPLC exploits the VHF band in TVWS by offering a multiple-input multiple-output (MIMO) solution using both the TVWS wireless channel and the BPLC channel. Our new hybrid system is different from the previous systems in the following aspects. First, WBPLC does not only introduce a simple hybrid solution, however it offers a novel MIMO solution, using the wireless TVWS channel and the BPLC channel in the VHF band. WBPLC uses the crosstalk between the BPLC and the TVWS communications addressed in [17–21] to enhance the achievable throughput. Second, WBPLC is the first BPLC solution that can access the VHF band using the ECMA-392 standard, which yields an increase in the permissible PSD and hence, enhancing the achievable throughput. Also, WBPLC offers a novel solution for the electromagnetic compatibility (EMC) problem with the existing wireless services, since the WBPLC under the ECMA-392 standard offers a maximum protection for the wireless services. Third, WBPLC offers a cost-effective hybrid solution as both TVWS and BPLC can work in the same VHF band and hence, the up- and down-converters are no longer required.

The rest of the article is organized as follows. In Section II, the regulations, the main standards and the channel characteristics of the TVWS are presented. In Section III, the regulations, the main standards and the channel characteristics of the BPLC are presented. In Section IV, the WBPLC system is presented and compared with both TVWS and BPLC through simulations. In Section V, the article is concluded.

2. TVWS REGULATIONS AND STANDARDS

2.1. Governing Regulations

According to the FCC rules issued in 2008 [8], TVBDs are divided into two categories: 1) fixed devices, and 2) portable/personal devices. For the fixed devices, they are allowed to access a free

DOI: 10.1002/dac

TV channel with maximum total transmission power of 4 W as effective isotropic radiated power (EIRP). However, for the portable/personal devices, the maximum permissible EIRP is 100 mW and 40 mW for a free non-adjacent and adjacent channel next to an occupied TV channel, respectively. The fixed devices category shall have an access over a geolocation database to obtain a list of the free channels and also shall have a high sensing capability to detect PU presence even if the PU received signal power is as low as -114 dBm. However, the portable/personal devices category is further subdivided into two subcategories: 1) mode I, which shall have an access over a geolocation database, and 2) mode II, which is unnecessary to have a connection with a geolocation database but must have a high sensing capability.

2.2. Standards

The TVWS standards are developed mainly by two organizations: IEEE and ECMA. IEEE developed five standards to utilize the TVWS spectrum in different applications, which can be summarized as: 1) IEEE 802.11af [9] for wireless local area network (WLAN), 2) IEEE 802.22 for wireless regional area network (WRAN), 3) IEEE 802.15.4m for low rate wireless personal area network (LR-WPAN), 4) IEEE 802.19.1 for enabling the family of IEEE 802 wireless standards to effectively utilize the TVWS spectrum by providing coexistence methods among independent TVBD networks, 5) IEEE 1900.7 for radio interface working in the TVWS spectrum. ECMA also released the standard ECMA-392 [10] first edition in 2009 and second edition in 2012 for supporting TVWS access. In this article, we are more interested in the WLAN applications; hence we will discuss in details the ECMA-392 standard.

In December 2013, IEEE 802.11af standard was released to provide the PHY and MAC regulations to organize spectrum sharing among licensed and unlicensed users in the TVWS. The IEEE 802.11af is considered as an amended version of the main standard IEEE 802.11 and its very high throughput (VHT) version of IEEE 802.11ac operating in bands below 6 GHz band. In IEEE 802.11af, two modes are presented: 1) Non-high throughput (Non HT); 2) TV very high throughput (TVHT). The channel bandwidth for non-HT mode is the basic channel unit (BCU) W. The BCU is defined as the original bandwidth of the TV channel according to the regulatory domain i.e. 6 MHz, 7 MHz and 8 MHz. However, the TVHT support two modes for the channel bandwidth: 1) Contiguous mode (i.e. 2W, 4W), where the channel bandwidth spans two or more adjacent BCUs. 2) Non-contiguous mode (W+W, 2W+2W, where the channel bandwidth spans two or more non-adjacent BCUs. Also, the TVHT supports two or more spatial streams, which enhances significantly the achieved throughput. For each orthogonal division multiplexed (OFDM) symbol, 144 subcarriers are used in 6 MHz or 8 MHz channel. However, for 7 MHz, 168 subcarriers are used to maintain the same sub-channel bandwidth of the 6 MHz channel. This yields a subcarrier frequency spacing of 41.66 kHz for the 6 and 7 MHz channels, while for the 8 MHz channel, the subcarrier frequency spacing is 55.55 kHz. The duration of the OFDM symbol is 24 μs for the 6 and 7 MHz channels, while it is 18 μs for 8 MHz channel. Also the guard interval (GI) period is defined as quarter of the OFDM symbol duration.

The ECMA-392 standard [10] adopts a channel bandwidth equivalent to the basic channel unit (BCU) bandwidth. The BCU is defined as the original bandwidth of the TV channel according to the regulatory domain (i.e., 6 MHz, 7 MHz and 8 MHz). Also, the standard supports using multiple spatial data streams. Each TV channel is spanned by 128 subcarriers, with subcarrier frequency spacing of 53.5 kHz, 62.5 kHz and 71.42 kHz for channel bandwidths of 6 MHz, 7 MHz and 8 MHz, respectively. The OFDM symbol duration is taken as 18.667 μs, 16 μs and 13.8 μs for the previously mentioned channel bandwidths. The GI period can be taken as the symbol time duration divided by 8, 16 or 32.

The PHY frame in ECMA-392 is divided into three main fields: 1) preamble, 2) header, and 3) data. The preamble field consists of two sub-fields: a) short preamble, which has the duration of one OFDM symbol, and is used for automatic gain control (AGC) at the receiver (Rx) side, b) long preamble, which has the duration of two OFDM symbols and is used for channel estimation. The header field consists of PHY header, MAC header, parity bits and tail bits. The PHY header holds the information of data rate, length, scrambler initialization seed, interleaver option, multiple

DOI: 10.1002/dac

antenna mode, and transmission power. The MAC header incorporates the information directly from the MAC layer without change. The overall duration of the header is 2 OFDM symbols. The data field consists of the data bytes requested to be sent (maximum 4095 bytes), the tail bits and padding bits.

2.3. MIMO TVWS

MIMO techniques [22] [23] can significantly enhance the spectral efficiency of wireless communication systems. Different MIMO techniques, e.g., space time block coding (STBC), spatial multiplexing (SM) are allowed in both IEEE 802.11af [9] and ECMA-392 [10]. However, in [24] and [25] two main challenges were presented to using multiple antennas in the TVWS. The first one is due to the long wavelengths in the UHF and VHF bands. The typical wavelength in UHF ranges from 0.3 m to 0.6 m, which makes it not practical to design small footprints for MIMO TVBDs. In the VHF, the case is even worse as the wavelength ranges from 1 m to 10 m. The second challenge is the mutual coupling between multiple antennas which increases in the low frequencies. Hence, most of the MIMO solutions were proposed in the UHF band as in [26], which limits the exploitation of the VHF band of the TVWS.

2.4. TVWS Channel

The TVWS channel differs according to the frequency band of operation. However, the VHF channel characteristics are better than the UHF in terms of path loss and penetration through the concrete walls. As we are more interested in the shared VHF band between the BPLC and the TVWS, we will focus on the VHF TVWS channel. According to [27], the path loss of the TVWS is dependent on several factors such as: number of walls, number of floors between the transmitter (Tx) and the Rx, in addition to the frequency and separation distance. For example, the average path loss at 100 MHz ranges between 51 dB and 81 dB for a coverage distance between 15 m and 50 m, respectively. Also, the root mean square (rms) delay of the TVWS channel is 100 ns, which resembles to 90% coherence bandwidth of 200 kHz [28].

3. BPLC REGULATIONS AND STANDARDS

3.1. Governing EMC Regulations

The EMC of the BPLC with the existing wireless devices is a crucial problem for the BPLC and gives rise to EMC broadband regulations [16]. The EMC regulations differ according to each country. For example, in Europe, the standard of comité European de normalisation électrotechnique (CENELEC) organizes the emission measurement of each power line device. In addition, the CENELEC standard limits the PSD of the frequency spectrum below 30 MHz to -55 dBm/Hz and -85 dBm/Hz for the frequency band above 30 MHz. In US, the limits of the emission for a given frequency is determined by the maximum radiated electric field which is measured at specific separation distance from the power line cable. In Japan, the standard of comité international spécial des perturbations radioélectriques (CISPR) referred to as CISPR22 limits the PSD for the band below 15 MHz to -71 dBm/Hz and -81 dBm/Hz for the band above 15 MHz.

3.2. Standards

In 2010, IEEE 1901 standard was released to organize the high speed communication over the electric power lines. The standard spans the frequency band 1.8 MHz - 50 MHz with 1974 subcarriers, where the subcarrier frequency spacing is 24.414 kHz. The OFDM symbol duration is taken as 40.96 μs with guard interval duration of 4.96 μs. The standard supports multiple spatial streams for both single and three phase power line cables.

In December 2011, the Homeplug alliance issued the HomeplugAV2 standard [16] to provide the PHY and MAC layer for high speed power line communications. HomeplugAV2 introduces two main enhancements compared to the IEEE 1901 standard [15]: 1) frequency band extension

DOI: 10.1002/dac

Table I. Comparison between TVWS and BPLC

	TVWS	BPLC
PSD (dBm/Hz)	-47.7 (non-adjacent channel) / -51.7 (adjacent channel)	-55 (< 30 MHz) / -85 (> 30 MHz)
Developed Standards	IEEE 802.11af, IEEE 802.22 IEEE 802.15.4m, IEEE 802.19.1, IEEE 1900.7, ECMA-392	IEEE 1901, HomeplugAV1, HomeplugAV2
Frequency band (MHz)	54 - 806	1.8 - 100
Number of subcarriers	128 for each 6 MHz channel (ECMA-392)	3455 (HomeplugAV2)
Subcarrier frequency spacing (kHz)	53.5, 62.5 and 71.42	24.414
OFDM symbol duration (μs)	18.667, 16 and 13.8	40.96
GI duration (μs)	2.33, 2 and 1.725	4.96
Frame preamble and header duration (μs)	74.668, 64 and 55.2	55.5
Frame payload maximum number of bytes (byte)	4095	4095
Channel Path loss at 100 MHz for coverage distance 15 m - 50 m (dB)	51 - 81	38 - 81
Channel coherence bandwidth (kHz)	200	65.5 - 691.5
Channel rms delay (ns)	100	413

up to 86 MHz, and 2) MIMO capabilities with beamforming. This yields enhancing the achievable throughput in the HomeplugAV2 standard compared to the IEEE 1901 standard. The OFDM symbol uses 4096 subcarriers in the band 1.8 MHz - 100 MHz, where only 3455 subcarriers are supported for communication in the band 1.8 MHz - 86 MHz with subcarrier frequency spacing of 24.414 kHz. The OFDM symbol duration is 40.96 μs with GI duration of 4.96 μs. The HomeplugAV2 standard uses the same frame structure of IEEE 1901, which supports the carrier sense multiple access (CSMA) protocol. Each frame consists of four main fields: 1) preamble, 2) frame control (FC), 3) data or payload, 4) selective acknowledge (SACK). The preamble field is responsible for packet synchronization functionality. The FC provides addressing and frame information. The FC and the preamble fields are called collectively the delimiter, which has the duration of 55.5 μs. For the data field, the maximum number of data bytes is 4095 bytes. The data field is followed by a gap period of time according to the CSMA protocol called the response interframe space (RIFS), where the maximum duration of the data field and the RIFS is 2501.12 μs. The SACK field is sent by the Rx to the Tx to request the re-transmission of selected corrupted frames. The duration of the SACK is the same as the delimiter. The SACK field is followed by a gap period of time called the contention interframe space (CIFS). The CIFS and the RIFS periods are taken as 5 μs.

3.3. BPLC Channel

The power line cables are not designed to carry the communication signal. Hence, the power line channel suffers frequency selective fading for several reasons such as: the mismatch between the characteristic impedance of the cable and the terminal loads, the number and the length of the

DOI: 10.1002/dac

branches connected to the same cable and the temporal change of the connected loads to the power grid [29–33]. For example, the path loss at 100 MHz ranges between 38 dB and 81 dB for a coverage distance between 15 m and 50 m, respectively [34]. Also, the 90% coherence bandwidth of the BPLC ranges between 65.5 kHz and 691.5 kHz, while the average rms delay can be taken as 413 ns [32].

4. WBPLC: BPLC DEPLOYMENT INTO TVWS

4.1. Cooperation between BPLC and TVWS: Is it practical?

In table I, a summary is presented for the comparison between the TVWS and the BPLC in terms of the regulations, standards and channel characteristics. The comparison shows the convergence between TVWS and BPLC in the following aspects: 1) the two technologies span common part of the VHF band, which enables cooperation between them to exploit that band, 2) the BPLC channel has the minimum coherence bandwidth of 65.5 kHz. Hence, utilizing the TVWS standard in the BPLC communication is applicable as the subcarrier frequency spacing is 53.5 kHz, which is less than the coherence bandwidth of the BPLC; 3) the TVWS standard introduces the minimum symbol duration of 13.8 μs. Hence, utilizing the TVWS as a standard in the BPLC channel is also applicable as the OFDM symbol duration is greater than the rms delay of the BPLC channel, 4) the path loss introduced by the TVWS and BPLC channels lies approximately in the same range. Hence, the MIMO techniques such as STBC or SM may be used to enhance the achievable throughput.

4.2. System Model

In this part, we propose the WBPLC communication system, which deploys the BPLC in the TVWS spectrum. Two systems are presented: 1) non-high throughput WBPLC (non-HT-WBPLC), and 2) high throughput WBPLC (HT-WBPLC). In the non-HT-WBPLC, we use both the wireless TVWS and the SISO BPLC channels. However, in the HT-WBPLC, both wireless TVWS and MIMO BPLC are used. The non-HT-WBPLC and the HT-WBPLC have three modes of operation according to the operating frequency and PU status as follows.

4.2.1. Mode A This mode spans the frequency band 1.8 MHz - 30 MHz. Hence, HomplugAV2 standard is adopted for the PHY and MAC layers. According to HomeplugAV2 the PSD of the transmitted signal below 30 MHz is -55 dbm/Hz, and 1156 subcarriers are used with frequency spacing of 24.414 kHz. The band below 30 MHz has the advantage of being a completely free band, which can provide a backup channel when all the TVWS channels are occupied. The number of the spatial channels used in HT-WBPLC for this mode is 2 channels.

4.2.2. Mode B This mode deals with the case of the PU absence in the VHF band. Hence, the spanned frequency spectrum is 54 MHz - 88 MHz. According to FCC regulations, 5 TV channels are allowed for cognitive access in this band which are: 54 MHz - 60 MHz, 60 MHz - 66 MHz, 66 MHz - 72 MHz, 76 MHz - 82 MHz, and 82 MHz - 88 MHz. ECMA-392 standard is adopted in the PHY and MAC layers. Each channel is spanned by 128 subcarriers with subcarrier frequency spacing of 46 kHz. Consequently, the PSD for each channel is -47.7 dBm/Hz given that the maximum transmission power is 100 mW. However, for the adjacent channel, the PSD is decreased to -51.7 dBm/Hz, which corresponds to maximum transmission power of 40 mW. Hence, our WBPLC system offers the BPLC at least 34 dB increase in the PSD in the VHF band, which can significantly improve the achievable throughput. In the non-HT-WBPLC mode, SISO BPLC channel is used cooperatively with the wireless TVWS channel with maximum of 2 equivalent spatial channels. For the HT-WBPLC mode, MIMO BPLC channel is used with the maximum number of 3 equivalent spatial channels.

4.2.3. Mode C This mode treats the case of the PU presence in the VHF band. The spanned frequency band is 30 MHz - 88 MHz in the presence of the PU. HomeplugAV2 is adopted for

DOI: 10.1002/dac

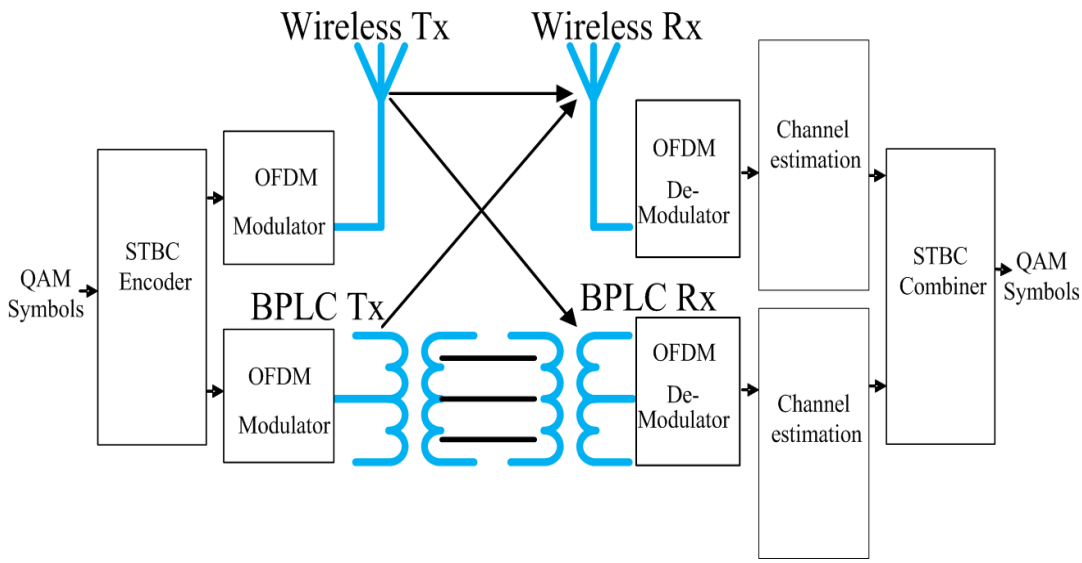

Figure 1. WBPLC system model

PHY and MAC layers. Hence, the PSD is restricted to -85 dBm/Hz. The frequency band from 30 MHz - 88 MHz is spanned by 1260 subcarriers with frequency spacing of 46 kHz.

5. SIMULATIONS

5.1. Simulation Setup

As illustrated in Fig. 1, at the Tx side, each quadrature amplitude modulated (QAM) symbol is coded using STBC. The output of the STBC is then split into two paths: 1) Wireless TVWS, and 2) BPLC, where each path adopts OFDM to allocate specific frequency channels to each user. At the Rx, the received signals from the BPLC coupling circuit and the TVWS wireless antenna are combined using an STBC combiner. The combined symbols are passed through a maximum likelihood (ML) detector to allow estimation of the transmitted symbols.

In our simulations, point-to-multi-point communication system is considered in a total area of 500 m^2. The overall area is subdivided into rectangular clusters of areas in the range of 15 m^2 - 45 m^2. Each cluster has random number of electric outlets and each outlet is connected to a random load. The WBPLC sink is placed at any outlet and also shall be connected to the geolocation database. The indoor wireless channel is represented using 3 levels model, which considers three superimposed effects: 1) two-ray Rayleigh fading channel for the multipath effect [35], with rms delay spread of 6 μs, 2) shadowing, and 3) path loss. Both shadowing and path loss effects are modeled using the VHF indoor path loss model in [27]. The indoor power line channel is also represented using the random topology generator proposed in [34], where different parameters are randomly generated and integrated to build up the power line topology which determines the power line channel gain. The power line topology parameters include cables types, loads types, values and numbers, outlets connection types and outlets numbers. The use of the random power line topology generator in [34] makes our simulations practical and generic to any indoor topology. An example of one of the topologies considered in our simulations is presented in Fig. 2. The noise considered is additive white Gaussian noise (AWGN) with zero mean and variance of -90 dB. Also, impulsive noise is considered using the model in [36]. Since our proposed system is TVWS standard compliant, the PU interference is also considered using two-states discrete time Markov chain model (DTMC) model, where the PU steady state probability presence is 0.2. In the simulations, our proposed HT-WBPLC is compared to the MIMO BPLC in [16], the BPLC WiFi [37] and the TVWS implemented using

DOI: 10.1002/dac

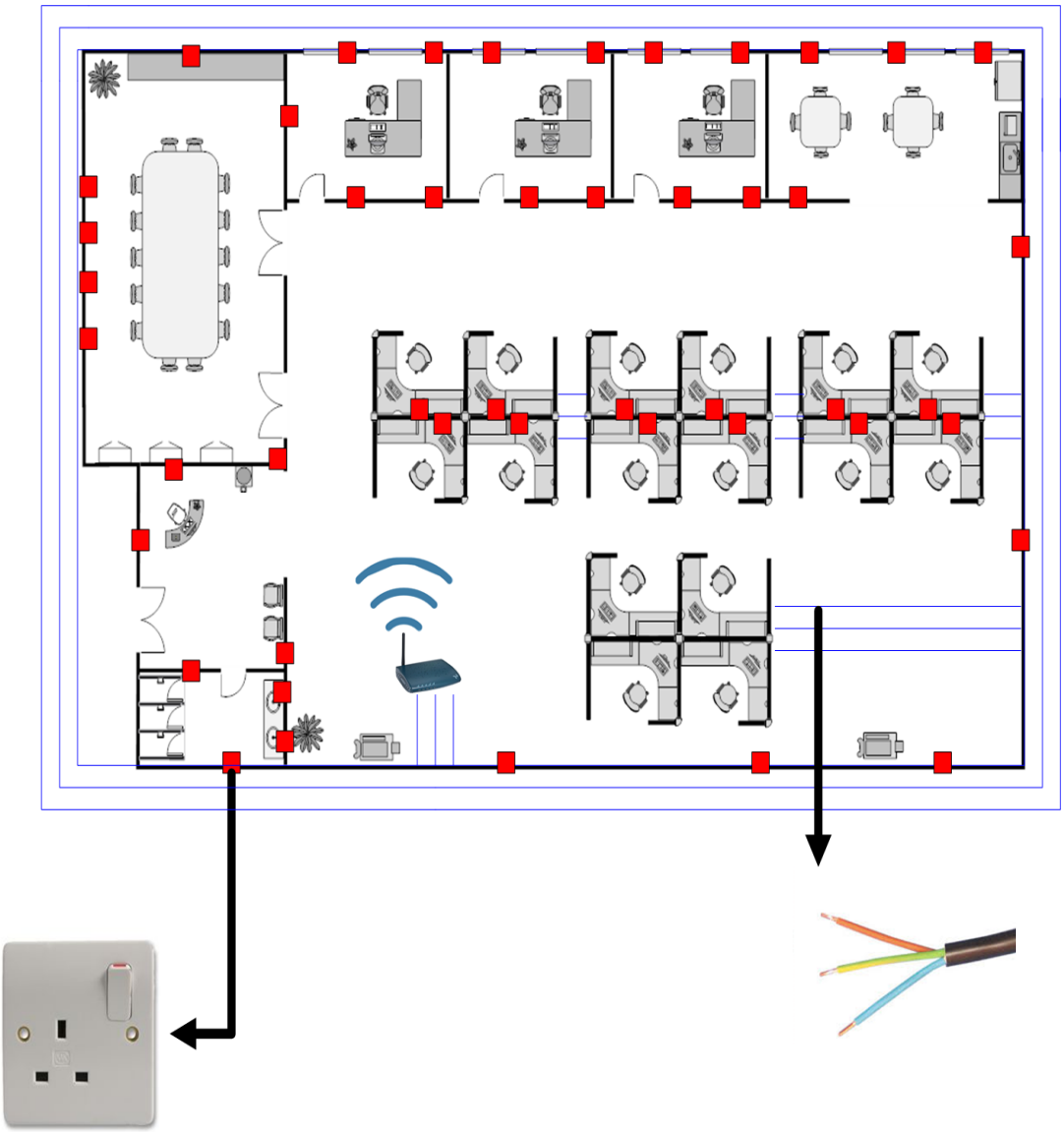

Figure 2. An example of WBPLC topology in office environment

the ECMA-392 standard in [10]. We used the same modulation techniques for the MIMO BPLC and BPLC WiFi in [16] and [37] and apply them to our point to multi-point system model for the sake of comparing different communication indoor communication techniques.

5.2. Simulation Results

In Fig. 3, the bit error rate (BER) performance of the HT-WBPLC is presented for 32-QAM symbols versus the received SNR. It is worth mentioning that the main advantage of the HT-WBPLC is its ability to achieve higher signal to noise ratio (SNR) compared to the MIMO BPLC due to its compliance with the TVWS standard which permits more PSD compared to the IEEE 1901 standard of the BPLC. Also, the HT-WBPLC can achieve higher SNR compared to TVWS in the VHF band due to its MIMO capability.

In Fig. 4, the achievable throughput by the HT-WBPLC, MIMO BPLC, BPLC WiFi and TVWS versus coverage distance is presented. The achievable throughput by the proposed HT-WBPLC is nearly double that achieved by the MIMO BPLC in [16], due to the higher PSD allowed by the

DOI: 10.1002/dac

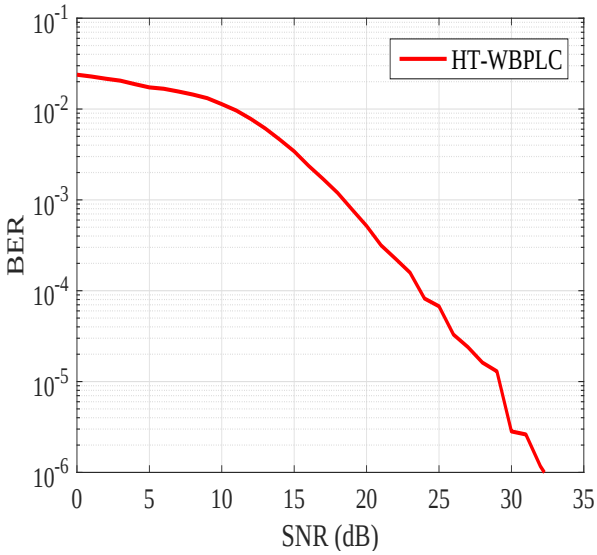

Figure 3. BER performance of the HT-WBPLC

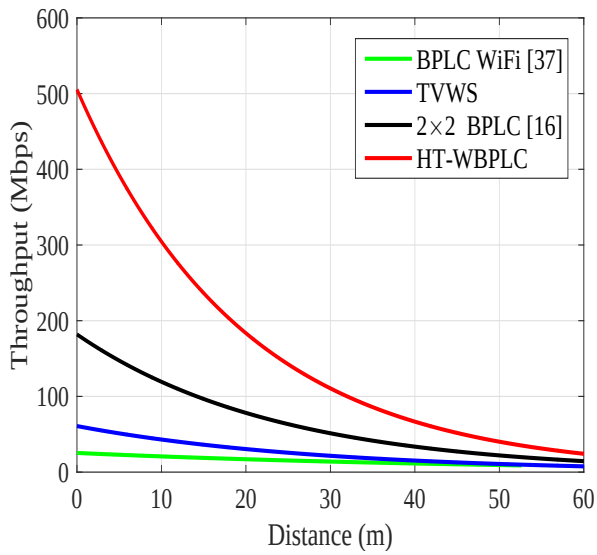

Figure 4. Achievable throughput and coverage distance

TVWS standard adopted in the HT-WBPLC. Also, the hybrid solution of the BPLC WiFi in [37] cannot offer a good coverage distance compared to the HT-WBPLC since, the WiFi in the 2.54 GHz band has higher path loss compared to the wireless TVWS in the VHF band adopted in the HT-WBPLC.

In Fig. 5 the HT-WBPLC complementary cumulative distribution function (CCDF) of the achievable throughput is compared to its counterpart in the cases of using MIMO BPLC only, TVWS only, and MIMO BPLC assisted by TVWS in the VHF band. In all previous cases, MIMO BPLC and TVWS communication systems are compatible with the HomplugAV2 and ECMA-392 standards, respectively in terms of PSD restrictions, symbol duration and subcarrier frequency spacing. The CCDF comparison results show a significant enhancement in the achievable throughput. For example, at throughput of 20 Mbps the CCDFs of the MIMO BPLC, TVWS and

DOI: 10.1002/dac

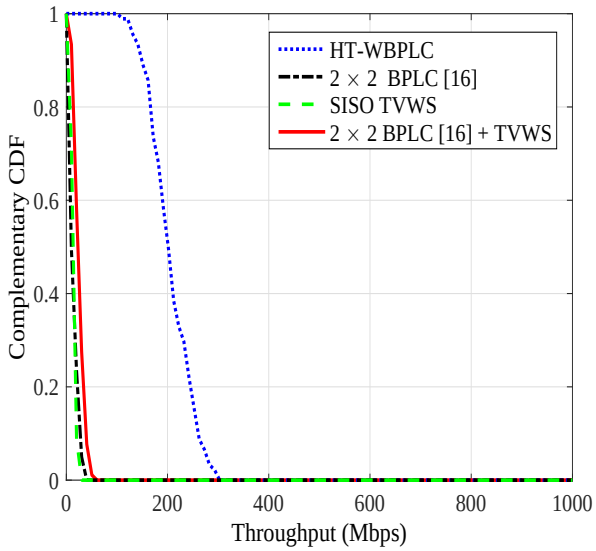

Figure 5. CCDF of the achievable throughput in the VHF band below 100 MHz by HT-WBPLC, MIMO BPLC and wireless TVWS at input power of 100 mW

MIMO BPLC + TVWS are 8%, 23%, and 58%, respectively. However, the CCDF of the 20 Mbps in the case of the HT-WBPLC reaches to 100%. Also, the HT-WBPLC can achieve 50% CCDF for a throughput of 200 Mbps, which cannot be achieved by any of the compared systems in the VHF band.

5.3. Potential Advantages of WBPLC

WBPLC can get the benefit of TVWS and BPLC without adding much hardware components since both technologies can access the VHF band. Hence, we can conclude that the WBPLC has twofold benefits for TVWS and BPLC communication systems, which can be summarized as:

- For TVWS, WBPLC supports the TVWS with MIMO capability in the VHF band, which improves significantly the achievable throughput, and overcomes the aforementioned footprint design challenges in [24] and [25].
- WBPLC supports the SU in the TVWS channels with a backup free channel in the high frequency (HF) band (1.8 MHz - 30 MHz). This facility can be utilized in the streaming services, where the delay time of transmission is limited.
- WBPLC supports the BPLC communication in the VHF band with higher PSD under the umbrella of the FCC regulations. Hence, the power is efficiently distributed between the HF and VHF band, which yields a higher capacity.
- WBPLC supports the BPLC with higher input power due to the increase in the PSD of the VHF band. Hence, using this power, the coverage area and the number of accommodated users can increase. It is worth mentioning that the maximum allowed input power for the BPLC is 282 mW, which is mostly concentrated in the HF band. Hence, using a higher power (which is feasible in the WBPLC) can significantly improve the coverage area for point to multi-point communications. This advantage can be used in many high speed applications in the smart grids and sensor networks as in [38] [39].

6. CONCLUSION

In this article, a novel WBPLC system has been proposed as a hybrid system, which combines two emerging technologies: TVWS and BPLC. The regulations, standards and the channel

DOI: 10.1002/dac

characteristics of each technology have been presented followed by a brief comparison between TVWS and BPLC, which shows the feasibility of cooperation between these two technologies. TVWS has challenges in using MIMO techniques in the VHF band. Also, the BPLC suffers a high restriction on its PSD in the VHF band for EMC issues. Hence, WBPLC presents a feasible solution to overcome those challenges and limitations. The CCDF curves show that the HT-WBPLC can support more than double the number of users with the same data rate, compared to MIMO BPLC. Also, compared to TVWS, HT-WBPLC provides a cost-effective MIMO solution in the VHF band, which significantly improves the achievable throughput. Hence, WBPLC offers a promising point to multi-point solution for future smart grid multimedia networks.

REFERENCES

1. H. Wang, Y. Qian, and H. Sharif, "Multimedia communications over cognitive radio networks for smart grid applications," *IEEE Wireless Communications*, vol. 20, no. 4, pp. pp. 125–132, August 2013.
2. K. Patil, R. Prasad, and K. Skouby, "A survey of worldwide spectrum occupancy measurement campaigns for cognitive radio," in *Proc. International Conference on Devices and Communications (ICDeCom)*, (pp. 1–5), February 2011, Mesra, India.
3. S. Contreras, G. Villardi, R. Funada, and H. Harada, "An investigation into the spectrum occupancy in Japan in the context of TV White Space systems," in *6th International ICST Conference on Cognitive Radio Oriented Wireless Networks and Communications (CROWNCOM)*, (pp. 341–345), June 2011, Osaka, Japan.
4. A. Marţian, C. Vlădeanu, I. Marcu, and I. Marghescu, "Evaluation of Spectrum Occupancy in an Urban Environment in a Cognitive Radio Context," *International Journal on Advances in Telecommunications*, vol. 3, no. 3, pp. pp. 172–181, 2010.
5. M. Hoyhtya, A. Mammela, M. Eskola, M. Matinmikko, J. Kalliovaara, J. Ojaniemi, J. Suutala, R. Ekman, R. Bacchus, and D. Roberson, "Spectrum occupancy measurements: A survey and use of interference maps," *IEEE Communications Surveys and Tutorials*, vol. PP, no. 99, pp. pp. 1–30, April 2016.
6. M. H. Islam, C. L. Koh, S. W. Oh, X. Qing, Y. Y. Lai, C. Wang, Y.-C. Liang, B. E. Toh, F. Chin, G. L. Tan, *et al.*, "Spectrum survey in Singapore: Occupancy measurements and analyses," in *3rd International Conference on Cognitive Radio Oriented Wireless Networks and Communications (CrownCom 2008)*, (pp. 1–7), May 2008, Singapore.
7. "Notice of proposed rule making," *Federal Communications Commision, Document 04–113*, May 2004.
8. "Second Report and Order and Memorandum Opinion and Order In the Matter of Unlicensed Operation in the TV Broadcast Bands, Additional Spectrum for Unlicensed Devices Below 900 MHz and in the 3 GHz Band," *Federal Communications Commision, Document 08-260*, November 2008.
9. "IEEE 802.11 af Draft 5.0, Amendment 5: TV White Spaces Operation," Retrieved April 2013.
10. "MAC and PHY for Operation in TV White Space," *ECMA-392*, December 2009.
11. M. U. Rehman, S. Wang, Y. Liu, S. Chen, X. Chen, and C. G. Parini, "Achieving high data rate in multiband-OFDM UWB over power-line communication system," *IEEE Transactions on Power Delivery*, vol. 27, no. 3, pp. pp. 1172–1177, July 2012.
12. L. B. Wang, P. L. So, K. Y. See, M. Oswal, and T. S. Pang, "Investigation of radiated emissions in power line communication networks," in *Proc. IEEE Int. Power Eng. Conf. (IPEC 2007)*, (pp. 455–460), Dec. 2007, Singapore.
13. S. Khedimallah, B. Nekhoul, K. Kerroum, and K. El Khamlichi Drissi, "Analysis of power line communications electromagnetic field in electrical networks taking into account the power transformers," in *Proc. IEEE Int. Symp. Electromagn. Compat.*, (pp. 1–6), Sep. 2012, Rome, Italy.
14. V. Doric, D. Poljak, I. Hadjina, and K. El Khamlichi Drissi, "EMC analysis of the narrowband PLC system based on the antenna theory," in *Proc. IEEE 21st Int. Conf. Soft., Telecomm. Comput. Networks (SoftCOM)*, (pp. 1–5), Sep. 2013, Primosten, Croatia.
15. "IEEE Standard for Broadband over Power Line Networks: Medium Access Control and Physical Layer Specifications," December 2010.
16. L. T. Berger, A. Schwager, P. Pagani, and D. Schneider, *MIMO Power Line Communications: Narrow and Broadband Standards, EMC, and Advanced Processing*. CRC Press, 2014.
17. W. A. Finamore, M. V. Ribeiro, and L. Lampe, "Advancing power line communication: cognitive, cooperative, and mimo communication," in *Proc. Brazilian Telecommunications Symposium*, (pp. 13–16), September 2012, Brasilia Brazil.
18. P. Degauque, P. Laly, V. Degardin, M. Lienard, and L. Diquelou, "Compromising Electromagnetic Field Radiated by In-House PLC Lines," in *Proc. IEEE Global Telecommunications Conference (GLOBECOM)*, (pp. 1–5), IEEE, December 2010, Florida USA.
19. V. Degardin, P. Laly, M. Lienard, and P. Degauque, "Compromising Radiated Emission from a Power Line Communication Cable," *Journal of Communications Software & Systems*, vol. 7, no. 1, pp. 16–21, March 2011.
20. P. Degauque, P. Laly, V. Degardin, and M. Lienard, "Power line communication and compromising radiated emission," in *Proc. IEEE International Conference on Software, Telecommunications and Computer Networks (SoftCOM)*, (88–91), IEEE, September 2010, Split - Bol Croatia.
21. T. R. Oliveira, C. A. Marques, M. S. Pereira, S. L. Netto, and M. V. Ribeiro, "The characterization of hybrid PLC-wireless channels: A preliminary analysis," in *Proc. 17th IEEE International Symposium on Power Line Communications and Its Applications (ISPLC)*, (pp. 98–102), IEEE, March 2013, Johannesburg South Africa.
22. X.-L. Huang, J. Wu, Y. Wen, F. Hu, Y. Wang, and T. Jiang, "Rate-adaptive feedback with Bayesian compressive sensing in multiuser MIMO beamforming systems," *IEEE Transactions on Wireless Communications*, vol. 15, no. 7,

DOI: 10.1002/dac

pp. 4839–4851, July 2016.
23. T.-C. Zhang, C.-K. Wen, S. Jin, and T. Jiang, "Mixed-ADC massive MIMO detectors: Performance analysis and design optimization," *IEEE Transactions on Wireless Communications*, vol. 15, no. 11, pp. 7738–7752, November 2016.
24. E. Tsakalaki, O. Alrabadi, E. De Carvalho, and G. F. Pedersen, "Antenna design considerations for mimo tv white-space handsets," in *7th European Conference on Antennas and Propagation (EuCAP)*, (pp. 2597–2600), April 2013, Gothenburg, Sweden.
25. M. Nekovee, "Cognitive radio access to tv white spaces: Spectrum opportunities, commercial applications and remaining technology challenges," in *IEEE Symposium on New Frontiers in Dynamic Spectrum*, (pp. 1–10), April 2010, Singapore.
26. J. Oh, S. Kim, and B. Jeong, "Mimo/multi-channel rf transceiver for cognitive radio system," in *Proc. IEEE MTT-S International Microwave Workshop Series on Intelligent Radio for Future Personal Terminals (IMWS-IRFPT)*, (pp. 1–4), September 2011, Daejeon, South Korea.
27. J. Andrusenko, R. L. Miller, J. A. Abrahamson, N. M. Merheb Emanuelli, R. S. Pattay, and R. M. Shuford, "VHF general urban path loss model for short range ground-to-ground communications," *IEEE Transactions on Antennas and Propagation*, vol. 56, no. 10, pp. pp. 3302–3310, October 2008.
28. Z. Lin, M. Ghosh, and A. Demir, "A comparison of mac aggregation vs. phy bonding for wlans in tv white spaces," in *IEEE 24th International Symposium on Personal Indoor and Mobile Radio Communications (PIMRC),*, (1829–1834), September 2013, London, UK.
29. T. Zheng, X. Yang, and B. Zhang, "Broadband transmission characteristics for power-line channels," *IEEE Transactions on Power Delivery*, vol. 21, no. 4, pp. pp. 1905–1911, October 2006.
30. M. Tlich, A. Zeddam, F. Moulin, and F. Gauthier, "Indoor power-line communications channel characterization up to 100 mhz part i: one-parameter deterministic model," *IEEE Transactions on Power Delivery*, vol. 23, no. 3, pp. pp. 1392–1401, July 2008.
31. A. M. Tonello and F. Versolatto, "Bottom-up statistical plc channel modeling part i: Random topology model and efficient transfer function computation," *IEEE Transactions on Power Delivery*, vol. 26, no. 2, pp. pp. 891–898, April 2011.
32. M. Tlich, A. Zeddam, F. Moulin, and F. Gauthier, "Indoor power-line communications channel characterization up to 100 MHzpart II: time-frequency analysis," *IEEE Transactions on Power Delivery*, vol. 23, no. 3, pp. pp. 1402–1409, July 2008.
33. J. Shin, J. Lee, and J. Jeong, "Channel modeling for indoor broadband power-line communications networks with arbitrary topologies by taking adjacent nodes into account," *IEEE Transactions on Power Delivery*, vol. 26, no. 3, pp. pp. 1432–1439, July 2011.
34. M. Heggo, X. Zhu, Y. Huang, and S. Sun, "A novel statistical approach of path loss mapping for indoor broadband power line communications," in *Proc. IEEE International Conference on Smart Grid Communications (SmartGridComm)*, (pp. 499–504), November 2014, Venice, Italy.
35. N. Benvenuto and L. Tomba, "Performance comparison of space diversity and equalization techniques for indoor radio systems," *IEEE transactions on vehicular technology*, vol. 46, no. 2, pp. 358–368, May 1997.
36. J. Yin, X. Zhu, and Y. Huang, "Modeling of amplitude-correlated and occurrence-dependent impulsive noise for power line communication," in *Proc. IEEE International Conference on Communications (ICC)*, (pp. 4565–4570), June 2014, Sydney, Australia.
37. S. W. Lai, N. Shabehpour, G. G. Messier, and L. Lampe, "Performance of wireless/power line media diversity in the office environment," in *Proc. IEEE Global Communications Conference (GLOBECOM)*, (pp. 2972–2976), December 2014, Texas, USA.
38. S. He, X. Gong, J. Zhang, J. Chen, and Y. Sun, "Curve-based deployment for barrier coverage in wireless sensor networks," *IEEE Transactions on Wireless Communications*, vol. 13, no. 2, pp. 724–735, February 2014.
39. S. He, D.-H. Shin, J. Zhang, J. Chen, and Y. Sun, "Full-view area coverage in camera sensor networks: dimension reduction and near-optimal solutions," *IEEE Transactions on Vehicular Technology*, vol. 65, no. 9, pp. 7448–7461, November 2016.

DOI: 10.1002/dac