Cranfield UNIVERSITY

CUSTARD

(Cranfield University Space Technology
Advanced Research Demonstrator)

A Micro-System Technology Demonstrator Nanosatellite

Summary of the Group Design Project

MSc in Astronautics and Space Engineering

1999-2000

Cranfield University

College of Aeronautics Report 0019

Dr. Stephen Hobbs,
College of Aeronautics,
Cranfield University

Ray Turner,
Space Science Department,
Rutherford Appleton Laboratory

November 2000

CUSTARD - A Micro-System Technology Demonstrator Nanosatellite, Summary of the Group Design Project, MSc in Astronautics and Space Engineering, 1999-2000, Cranfield University

College of Aeronautics report 0019

S.E. Hobbs, R.F. Turner

Abstract

CUSTARD (Cranfield University Space Technology And Research Demonstrator) was the group design project for students of the MSc in Astronautics and Space Engineering for the Academic Year 1999/2000 at Cranfield University. The project involved the initial design of a nanosatellite to be used as a technology demonstrator for microsystem technology (MST) in space.

The students worked together as one group (organised into several subgroups, e.g. system, mechanical), with each student responsible for a set of work packages. The nanosatellite designed had a mass of 4 kg, lifetime of 3 months in low Earth orbit, coarse 3-axis attitude control (no orbit control), and was capable of carrying up to 1 kg of payload. The electrical power available was 18 W (peak). Assuming a single X-band ground station at RAL (UK), a data rate of up to 1 M bit s^{-1} for about 3000 s per day is possible. The payloads proposed are a microgravity laboratory and a formation flying experiment.

The report summarises the results of the project and includes executive summaries from all team members. Further information and summaries of the full reports are available from the College of Aeronautics, Cranfield University.

Acknowledgements

A project like this depends on input from a wide range of people, who all deserve acknowledgement. The work presented here is primarily that of the Astronautics and Space Engineering students for 1999-2000. Research students and staff (Tom Bowling, Peter Roberts, Cédric Seynat and others) have helped significantly, as have the many industry contacts (especially at Astrium and Rutherford Appleton Laboratory) who responded to students' questions patiently, and often with enthusiasm; we gratefully acknowledge their input to the project.

Contents

List of Figures

List of Tables

1. Introduction

This report summarises the group project of the MSc in Astronautics and Space Engineering at Cranfield University for the year 1999/2000. Cranfield is a founder member of the Aerospace Microsystem Technology Applications Partnership (AMSTAP) in the UK. A study by AMSTAP in 1999 proposed that one way for the UK to coordinate and strengthen its work in microsystem technology (MST) for space was for universities to collaborate on building a nanosatellite to gain flight experience for UK MST. The student project is part of the initial design process for this nanosatellite.

A parallel project also linked to the AMSTAP technology demonstrator nanosatellite study ran at Southampton University involving final year undergraduates (MEng, BEng) - their findings are available at www.soton.ac.uk/~nanosat

Aims

The aim of the UK university nanosatellite project is to contribute to the development of MST applications in space.

Objectives / Requirements

Specific objectives for the university nanosatellite project are:

- Demonstrate MST in space (MST hardware or related operational concepts)
- Support UK industry in MST applications in aerospace (this does not require the use only of UK hardware)
- Develop a pool of trained space engineers familiar with MST for aerospace
- The (initial) demonstrator should be ready for launch within two years. Its mass should be 4 kg (excluding payload). The demonstrator should be suitable for zero or very low-cost launches of opportunity. Its lifetime in orbit (assuming a space hardware demonstrator) should be at least 3 months.
- The initial demonstrator is primarily a technology demonstrator but it should also perform a useful function (e.g. scientific) if possible.

The objective of the design project for 1999/2000 was to develop a baseline design for the university nanosatellite which could eventually meet the objectives listed above.

Report Structure

The body of the report gives an overview of the project and discusses some of the issues raised. The main technical work is actually contained in Appendix B which is a compilation of the executive summaries written by each student.

2. Project Organisation

The project involved the initial design of a nanosatellite to be used as a technology demonstrator for microsystem technology (MST) in space. The students worked together as one group (organised into several subgroups, e.g. system, mechanical), with each student responsible for a set of work packages.

Five subgroups were created. The following table shows the subgroups and their main responsibilities.

• systems	• ensure the system meets the user requirements; • project management(1): ensure all key tasks are covered adequately, ensure proper integration of subsystems; • prime responsibility for budgets(1) (mass, power, data, thermal, etc.); • translate user requirements into s/c requirements • planning(2): manufacture; assembly, integration, test; mission • maintain project documentation.
• mission / payload	• mission identification; • payload(s) specification, design;
• mechanical	• mechanical and thermal design; • launcher interface; • de-orbit mechanism • configuration
• electrical	• power raising, storage, regulation, distribution (inc. harness) • on-board data handling and telemetry
• orbit and attitude control	• attitude determination and control (if needed); • launch and orbit insertion; • de-orbit planning

Notes

1. System group responsibilities for managing budgets (especially cost) and project management are shared with the Project Director(s).

2. Planning is a system engineering task; the implementation of the later phases is likely to be the responsibility of other sub-groups.

Table 1. Project work package breakdown for CUSTARD.

The project ran from October 1999 to March 2000. Formal weekly progress meetings with staff present were supplemented by less formal subgroup meetings as required. Each student spent approximately 600 hours on the project, which thus represents a combined effort of approximately 8 engineer-years.

3. System Design and Proposed Baseline

The starting point for the project was deliberately open and the students had to derive their own specific requirements for the design study. The starting point only asked the group to design a nanosatellite (mass < 10 kg) to demonstrate microsystem technology in space. An initial baseline of a nanosatellite with mass 4 kg and 3 W (average) available was proposed but was open to revision.

The process of developing specific requirements to allow individual subsystems to be designed took most of the period to December 1999. Some of the key issues discussed in this early phase were the orbit (GTO or LEO in particular) and the payload(s) to be carried. The outcome of this phase was the decision to design for a polar LEO orbit but to consider the alternative GTO as a fall-back. Since a variety of payloads were to be flown it was decided to adopt a sun-pointing attitude to maximise the power raised. Individual payloads would have to work within this pointing limitation - but for technology demonstration this was not felt to be an insurmountable restriction.

The second phase of the project ran from January to March 2000, ending with the final presentation. This phase involved the detailed design of the nanosatellite subsystems and refinement of the mission baseline.

Key Decisions

A number of key decisions were taken which shaped the whole project. These are summarised below:

1. Bus / Payload Concept

The multi-mission bus / custom payload module shaped the design work significantly. This concept is appropriate to a mass-produced bus, but for an initial prototype / low-cost technology demonstrator needs further consideration.

2. Mass

The desire to build a "nanosatellite" (for publicity reasons as much as anything) limits the total mass to 10 kg. In practice this does not appear to be a significant limitation for a project to be carried out within universities but it is to some degree an arbitrary engineering limitation.

3. Lifetime

The mission lifetime was chosen to be 3 months. This seemed adequate to demonstrate technology as required but is relatively short. In particular it was a key factor in sizing the attitude control system and thus in determining which system to choose (e.g. cold gas vs magnetorquer actuator).

4. Attitude Control Mode

An inertially-pointing (sun-pointing) operational attitude control mode was chosen because this maximised the power generated and was not constrained by any payload requirements (reflecting the concept of a generic bus). This choice is convenient for power raising, but complicates other sub-systems such as communications, thermal design and payload.

5. Payload

Several candidate payloads were proposed. The two concepts chosen for more detailed study are (1) a formation flying experiment and (2) a small microgravity laboratory. A deorbit experiment was also considered, but not in great detail within the project although it still remains as part of the baseline. More work is required to develop and justify these concepts.

6. Communications

The main assumptions concerning the communications are the use of X-band and the size of the ground station. X-band allows the use of light compact antenna on the spacecraft - the main issue is the maturity of the technology available. The size of the ground station (12 m diameter) is more debatable in that there are relatively few such facilities available and their use for a low-cost university satellite is not assured. The high bandwidth provided by the large antenna may be more than is required to demonstrate the technology (although for operational use it could be very desireable).

Baseline Mission

The final mission baseline is summarised in Appendix A. Figure 1 shows the main structure of the spacecraft (note that no side panels are required).

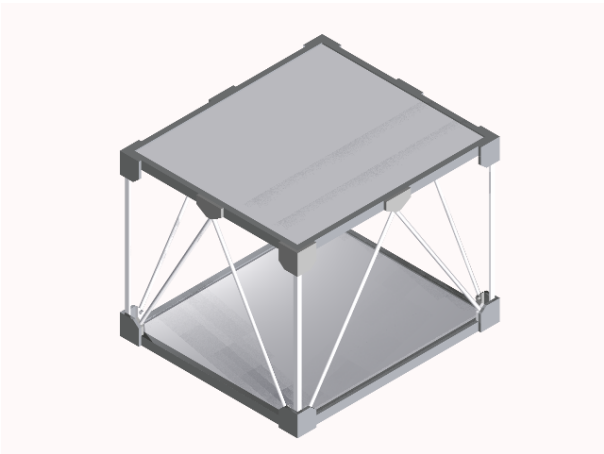

Figure 1. Spacecraft structure for CUSTARD showing top and base panels, corner struts and the diagonal piping used to supply gas to the thrusters (Mengozzi, 2000).

4. Discussion and Conclusions

The project was difficult because it involved unfamiliar technology (highly miniaturised subsystems and microsystem technology) and because the requirements were not clearly stated in conventional engineering terms. Despite this, a large amount of research has been performed and a credible baseline design has been developed.

Discussion

The previous chapter identified issues which had had a significant influence on the project. These are areas that require particular consideration, and in some cases it is likely that alternative decisions will eventually be made as the university nanosatellite concept develops. These topics should be evaluated critically before adopting the design decisions made.

An issue which is particular to this particular project is the management of the student group. A deliberately hands-off approach was taken to leave the group (1) to recognise issues and make decisions with relatively little external influence, and (2) to organise the workload amongst themselves. It is recognised that these are not easy tasks, and with a group of this size (22 students) more active project direction from staff would probably have made the project easier (although this would not necessarily improve the learning experience).

The timescale of the UK university nanosatellite project was initially put at two years to launch readiness from October 1999. With the resources available since 1999 this now looks quite unrealistic. The experience of this project may be useful in developing a more realistic timescale and in evaluating the resources required (personnel and equipment / components).

Conclusions

The student group covered a large field of research collectively and has unearthed a large amount of information relevant to nanosatellites and microsystem technology. Of the objectives identified for the project (see Section 1), the work presented in the group project reports (and summarised here) goes some way to satisfying all of them (but note the comments above on the timescale). The baseline design developed is unlikely to progress without significant modification but the individual research findings on which the design is based are very valuable and provide a significant resource for further work on the project to develop a UK university nanosatellite for MST demonstration.

References

Bengoa, Galder, CUSTARD, Power Design and Management. MSc in Astronautics and Space Engineering, College of Aeronautics, Cranfield University, April 2000.

Colebourn, Al, CUSTARD, Design of a Nanosatellite Mechanical System and Launch Adapter. MSc in Astronautics and Space Engineering, College of Aeronautics, Cranfield University, April 2000.

Fenn, Neville, Thruster System Design for the CUSTARD Nanosatellite. MSc in Astronautics and Space Engineering, College of Aeronautics, Cranfield University, April 2000.

Guilllard, Vincent, CUSTARD, De-orbit System and Group Coordination. MSc in Astronautics and Space Engineering, College of Aeronautics, Cranfield University, April 2000.

Hillen, Brice, CUSTARD, Onboard Communication Design. MSc in Astronautics and Space Engineering, College of Aeronautics, Cranfield University, April 2000.

Hughes, Kevin, CUSTARD, Thermal design. MSc in Astronautics and Space Engineering, College of Aeronautics, Cranfield University, April 2000.

Jany, Tarek, Electrical Power Subsystem for the CUSTARD nanosatellite. MSc in Astronautics and Space Engineering, College of Aeronautics, Cranfield University, April 2000.

Karpouzas, Dimitris, CUSTARD, Spacecraft Interaction Mission. MSc in Astronautics and Space Engineering, College of Aeronautics, Cranfield University, April 2000.

Lowe, Richard, CUSTARD, Design of a MicroSystems Technology Demonstrator Nanosatellite - Systems Report. MSc in Astronautics and Space Engineering, College of Aeronautics, Cranfield University, April 2000.

Maclean, Duncan, CUSTARD, Investigation of Nanosatellite Microprocessor and Fuel Cell Power Generation. MSc in Astronautics and Space Engineering, College of Aeronautics, Cranfield University, April 2000.

Matthewson, Victoria, CUSTARD, Momentum management. MSc in Astronautics and Space Engineering, College of Aeronautics, Cranfield University, April 2000.

McCall, Judeth, CUSTARD, Ground Based Communications and Data Handling. MSc in Astronautics and Space Engineering, College of Aeronautics, Cranfield University, April 2000.

McCrorie, Claire, CUSTARD, Attitude disturbances. MSc in Astronautics and Space Engineering, College of Aeronautics, Cranfield University, April 2000.

Mengozzi, Simone, CUSTARD Satellite Structure Design. MSc in Astronautics and Space Engineering, College of Aeronautics, Cranfield University, April 2000.

Middleton, Paul, Systems Report, Design of a Nanosatellite: CUSTARD. MSc in Astronautics and Space Engineering, College of Aeronautics, Cranfield University, April 2000.

Mullin, Laura, CUSTARD, Orbit determination. MSc in Astronautics and Space Engineering, College of Aeronautics, Cranfield University, April 2000.

Nobrega de Sousa, Jose, CUSTARD spacecraft environment interactions. MSc in Astronautics and Space Engineering, College of Aeronautics, Cranfield University, August 2000.

Piaz, Francesco, CUSTARD, Magnetorquers for attitude control. MSc in Astronautics and Space Engineering, College of Aeronautics, Cranfield University, April 2000.

Piper, Hannah, The CUSTARD Nanosatellite: Payload Specific Instrumentation. MSc in Astronautics and Space Engineering, College of Aeronautics, Cranfield University, April 2000.

Sapwell, Ben, Design of a NanoSpaceLab Payload for a Nanosatellite: CUSTARD. MSc in Astronautics and Space Engineering, College of Aeronautics, Cranfield University, April 2000.

Schmitz, Doris, CUSTARD, Attitude Determination of the Nanosatellite. MSc in Astronautics and Space Engineering, College of Aeronautics, Cranfield University, April 2000.

Yeh, C.C., CUSTARD, Mission Technology. MSc in Astronautics and Space Engineering, College of Aeronautics, Cranfield University, April 2000.

All the individual student reports are available from the College of Aeronautics; contact Dr. Stephen Hobbs, Course Director, MSc in Astronautics and Space Engineering. This Summary Report is available on the Web pages of the MSc in Astronautics and Space Engineering.

GDP1999 Summary.doc, 16/11/00

Appendix A. Project Summary

This table summarises the key mission parameters. Details are provided in the individual student reports (see Appendix B) although some inconsistencies may remain between reports.

Concept	Nanosatellite (< 10 kg) with multi-mission bus and mission specific payload module. Polar LEO (with GTO as backup); coarse 3-axis control; sun-pointing; 3 month lifetime.
Budgets	Mass: bus 3.35 kg, payload 1.00 kg Power: 18 W raised in Sun (>50% of LEO orbit)
Orbit	Polar LEO (800 km, inclination = 98.6°)
Power	Total of 18 W (in Sun), 2 deployable panels + 1 fixed panel (and as backup 3 other small areas (total 0.02 m^2) raising 2.9 W); Sun-pointing. Li-ion rechargeable batteries (9 x 2.8 Whr in 3 parallel strings). Primary cell for immediate post-launch use. Regulated bus
Mechanical	Structure: cuboid 175 x 240 x 210 mm, struts and honeycomb panels (top and bottom); satisfies Ariane launch loads and vibration requirements; mass ~500 g. Deployment mechanism: spring SMA (with film heaters) used to deploy solar array panels.
Thermal	Temperature ranges: Body: -39°C (eclipse) to 46°C (direct Sun) Arrays: -59°C (eclipse) to 103°C (direct Sun) Payload (thermally isolated): 14°C (radiator needed) Thermal control of body requires correct use of surface materials.
AOCS	3-axis coarse attitude control; cold gas for momentum dumping (once per orbit, 90 d life) and reaction wheels for attitude control (magnetorquers considered). Torques: $\leq 10^{-8}$ Nm in orbit; up to 10^{-6} Nm on release: design actuators for 10^{-4} Nm when momentum dumping. (C/A mode) GPS for on-board orbit determination. Attitude sensing (target 0.1° accuracy): sun sensor, magetometer, gyro, solar cells (≈ coarse sun sensor).
Electrical	RAL microprocessor board (4 Mips, 4.5 Mbyte RAM, Forth / C); star architecture

(continued on next page)

(baseline summary table continued)

Payload	Prime candidates: • Deorbit • Spacecraft interaction / formation flying: first task after post-launch checks, separation ≤ 1 km, uses imager and laser ranger • Nanolab (microgravity experiments within ~1 l); e.g. fluid physics, requiring heater, temperature and pressure sensors, illumination, imager. Other payloads considered: Star tracker, Electric propulsion (FEEP), Debris detection
Comms.	X-band, 4 antennas (for omnidirectional coverage), separate transmit / receive channels. Mass 100 g, power 1 W, 1 Mbaud assuming 12 m antenna at ground (margin 2.7 dB for inclination >13.9° above horizon; assume 0.6 Mbaud for higher link margin and lower inclinations), BER = 10^{-5}. Single ground station (RAL and Kiruna considered): gives 6 or 11 passes per day, and total link time of 3000 or 5500 s respectively.

Table A1. Summary of the baseline CUSTARD mission, March 2000.

Appendix B. Executive Summaries from Individual Reports

This Appendix contains the executive summaries from each of the student reports (ordered alphabetically by student surname).

The summaries have been only lightly edited. The reports have been examined and any major errors identified have been corrected. However it is not possible to guarantee that no errors remain; users of these summaries and the full reports should bear this in mind.

A list of the summaries and their contents is given on the following pages.

Group	Member	Work Packages
Systems	Guillard, Vincent	11#-### Project Co-ordination (Development Schedule), 13#-### International Space Law
	Lowe, Richard	11#-### Project Co-ordination (Budgets Control), 16#-### Failure Analysis
	Middleton, Paul	12#-### Operations, 14#-### Systems Architecture
AOCS	Fenn, Neville	21#-### Attitude Control (Thruster System Design)
	Guillard, Vincent	24#-### De-Orbiting
	Matthewson, Victoria	21#-### Attitude Control (Reaction Wheel System & Design)
	McCrorie, Claire	21#-### Attitude Control (Disturbance Torques sizing)
	Mullin, Laura	22#-### Attitude Determination (Magnetometer), 23#-### Orbit Maintenance (Position Determination)
	Piaz, Francesco	23#-### Attitude Control (Magnetorquers)
	Schmitz, Doris	22#-### Attitude Determination
Electrical	Bengoa-Endemano, Galder	31#-### Power Generation & Control (Solar Arrays & Power Management) 34#-### Cabling (Materials & Physical Connections)
	Hillen, Brice	32#-### TT & C (Communications)
	Jany, Tarek	31#-### Power Generation & Control (Power Storage & Distribution) 34#-### Cabling (Wire Alternatives)
	MacLean, Duncan	33#-### Microprocessor
	McCall, Judeth	32#-### TT & C (Ground Segment)
Mechanical	Colebourn, Al	40#-### General Administration (Gantt Charts & Documentation), 43#-### Mechanisms (Array Deployment), 44#-### Launch Adapter
	Hughes, Kevin	42#-### Thermal Analysis
	Mengozzi, Simone	41#-### Structural Design
	Nobrega de Sousa, Jose	46#-### Space Environment
Missions	Piper, Hannah	51#-### Mission Concepts, 53#-### Payload Specific Instruments
	Karpouzas, Dimitris	55#-### Launch Opportunities, 56#-### Spacecraft Interaction Mission Development
	Sapwell, Ben	51#-### Mission Concepts, 57#-### Nano-SpaceLab Mission Development
	Yeh, Chih-Cheng	51#-### Mission Concepts, 52#-### Mission Technologies

Table B1. List of subsystem areas and the corresponding project reports.

Contents of Appendix B

B.1. Galder Bengoa

This project to design a nano-satellite was carried out by Cranfield University students. The satellite will be inserted into a noon midnight orbit at an altitude of 800 km in three years time, sharing the launch with a big satellite to reduce the cost.

The satellite will perform two missions during its three-month lifetime. The first one is called the "Space Interaction" mission, which will give a measurement of the satellites capabilities by determining the distance of a partner spacecraft that will be deployed at the same time. The second one is the "Nanolab" mission, where experiments in microgravity are made, will obtain important information that will be sent back to Earth.

The work packages belonging covered in this report belong to the electrical group, being in charge of the Power Generation and Power Control.

B.1.1. Power Generation (Power Design)

This work package involves the determination of the satellite power source, but also the adaptation of the chosen source to the satellite. For the CUSTARD satellite, the source of power used is photovoltaic. The satellite is powered by two deployable solar panels and by covering its front surface with solar cells. In order to ensure that satellite acquires maximum power at all times, these cells will be constantly pointing towards the sun.

The satellite will also have three safety panels, two disposed on the sides and one on the back of the spacecraft. These safety panels will provide the satellite with enough power to restore its sun pointing if it is disturbed. E.g. they will be useful when satellite comes out of eclipse or if it collides with a meteoroid loosing attitude.

The estimated power required by these safety panels is 2.9 W, being provided by an area of 0.02 m^2. The power provided by the satellite front surface covered with solar cells is 6.44 W and by the two deployable panels is 11.6 W. Therefore the power of the satellite is 18 W. The total mass of all the satellite solar cells is going to be 296 grams costing £24,066.

A program called "cell program", has been developed to make the life easier to a future designer. This program enables the user either to calculate the power produced by and area or the area required to produce a certain power.

B.1.2. Power Control (Power Management)

The satellite has a limited amount of power from the solar arrays. The power must be distributed or shared in such a way that all the systems will have power when required. Hence, depending on when the different systems are used and their power requirement, the satellite operations are divided into different modes.

The power consumed by the satellite is directly dependent on where the satellite is deployed, as there is a big power difference if satellite is deployed just after or just before eclipse.

A program called "power management" has been developed to determine the satellite's power requirement at each moment in its orbit. From this program it is shown that the power required within the first four orbits will be greater than the satellite average. It has to be noted that even within these first orbits the satellite power will not be greater that 20 W, and therefore not too much additional power will be needed (battery power). After these first four orbits the satellite will get into a power periodicity where not additional power will be required.

B.2. Al Colebourn

As part of the mechanical design of the nano-satellite “CUSTARD”, this work concerns the preliminary design of a launch adapter and launcher separation system and solar array deployment mechanism.

A novel solar array deployment mechanism was designed employing shape memory alloys to provide the motive force. The group saw this application as a way of demonstrating a technology, which is the main aim of CUSTARD. These SMAs can replace all the traditional components of a deployment system, i.e. actuators, hinges, catches, dampers, springs, kinematic mounts and stops, with a single strip of a nickel-titanim alloy called Nitinol which exhibits a shape memory effect when heated. The solar panel with SMA hinges is shown below.

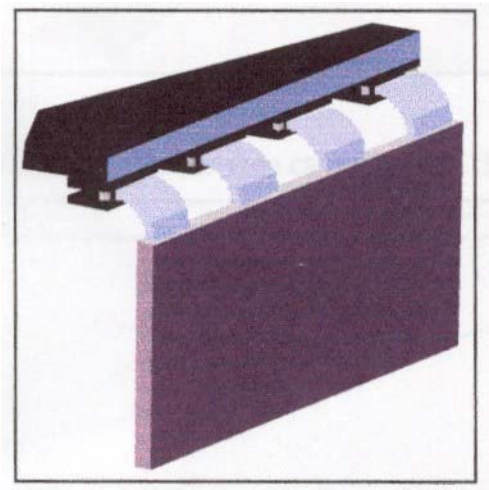

Initially, these alloy actuators were to be heated by their own internal resistance, that is, by passing a current through them. However, the limited power available from the satellite primary battery put a limit on the size of the actuator. Instead, independent film heaters were used, allowing larger actuators and a smaller primary battery. The heaters are bonded to the surface of the SMA.

The original, single orientation, solar array deployment system was extended to deploy to 45^0 or 90^0 as required, the process is reversible and repeatable. This was intended to make the satellite more versatile for future missions, and can increase the amount of power obtained per orbit. The SMAs have excellent fatigue resistance and so the arrays can be moved each orbit if required. It was recommended that the SMA hinges be configured in pairs so that no asymmetric forces act on the solar panels.

Extending the system by adding arrays was considered in case more power was needed than currently available. One possible configuration is shown below. This is the most mass efficient configuration.

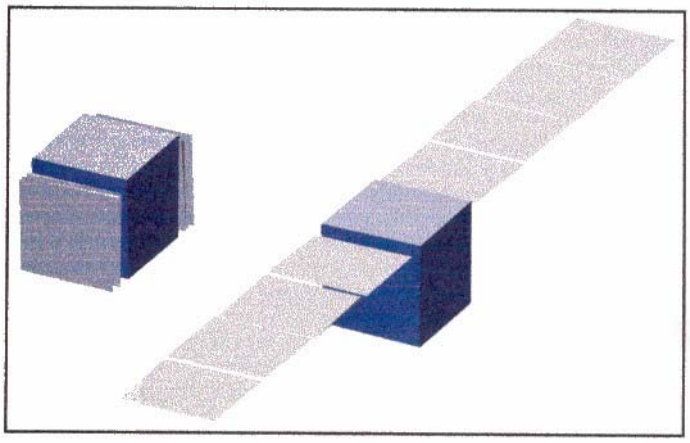

The mass penalty for additional panels was calculated in the graph below.

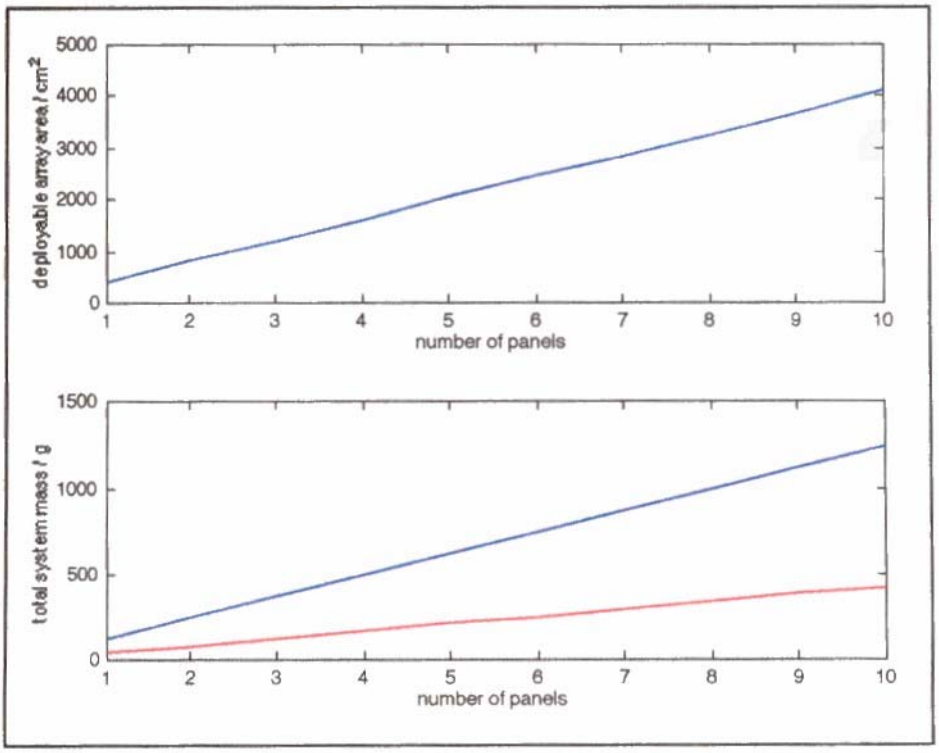

The mass penalty is small; increasing the array area by a factor of eight will have a mass of around 1 kg.

The final solar array system is shown below in its two deployment configurations. The SMA release catch, used to hold the panels in when stowed on the launcher, can be seen at the bottom of the satellite on the right.

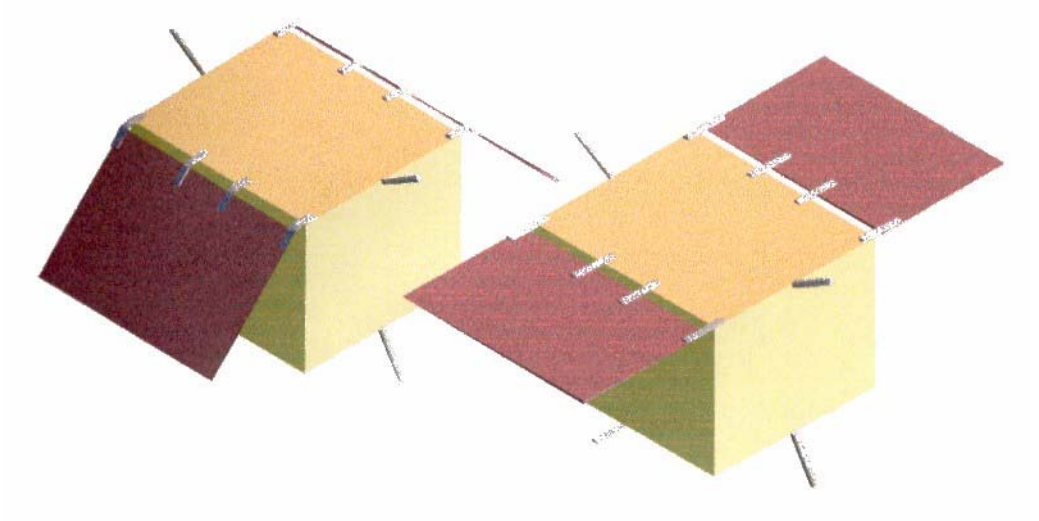

A satellite separation system was designed as a integral part of the launch adapter. The system uses springs to impart linear and rotational velocity to the satellite upon separation. The required stiffness and geometry of the springs used to separate the satellite from the launcher was ground using to post launch dynamics required by the Attitude Control Subgroup. The required spring length is 2.5 cm, with a compression of 1 cm and a stiffness of 100 N/m.

A method of attaching the satellite to the Arianne V ASAP ring was suggested. Brackets would need to be used to adapt the ring to fit (below, or several nano-satellites could be launched from on ring (below), although this would generate space debris, sing the ring would be left drifting.

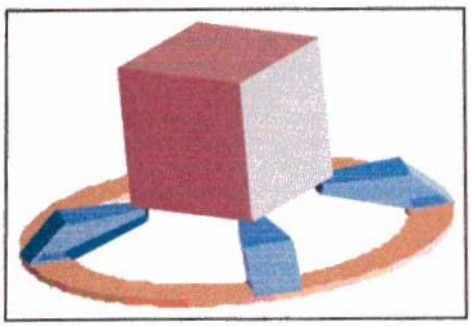

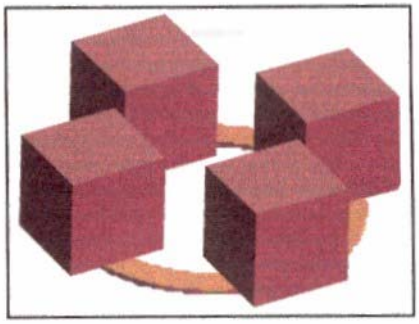

It was found that the system is inappropriate for use with nano-satellites due to its size (designed for satellites of up to 100 kg), and so it was recommended that the system designed herein be certificated for use on the Arianne launcher.

Various techniques of actuating the separation mechanism were compared in a trade-off study (below), the method chosen was a pyrotechnic cable cutter, this system has been extensively used in space applications and so reduces the risk associated with launching the satellite. This was incorporated into the design of the launch adapter.

Actuator	Weight	Cost	Multiple	History	Size	Score
Pyrotechnic Cable Cutter	4	2	5	5	3	75
Pyrotechnic Bolt Cutter	2	2	5	5	2	64
Pin Puller	3	2	1	5	2	56
SMA Split Nut	3	1	1	1	4	42
SMA Frangibolt	4	2	1	3	4	56
Category Weighting	4	5	3	5	3	

Below is the underside of the satellite showing the part of the launch adapter that stays attached to the satellite. These circular segments have a total mass of 3.5 g.

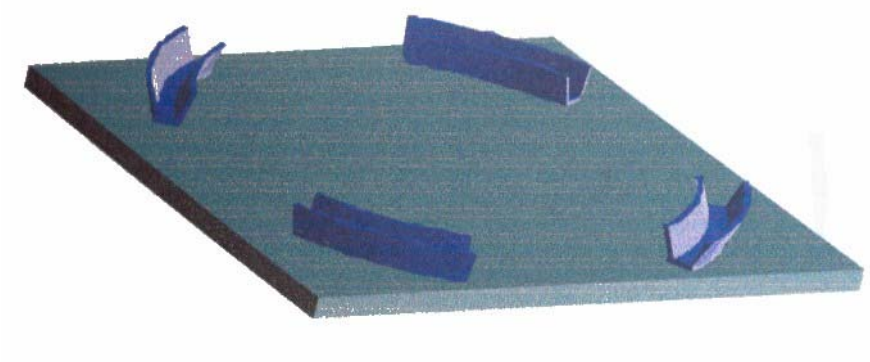

The final design of the launch adapter is shown below. The entire system should not weigh more that 100 to 500 g which is reasonable considering the size of the satellite. The mass of the launch adapter that stays attached to the launch vehicle is not included in CUSTARD's mass budget.

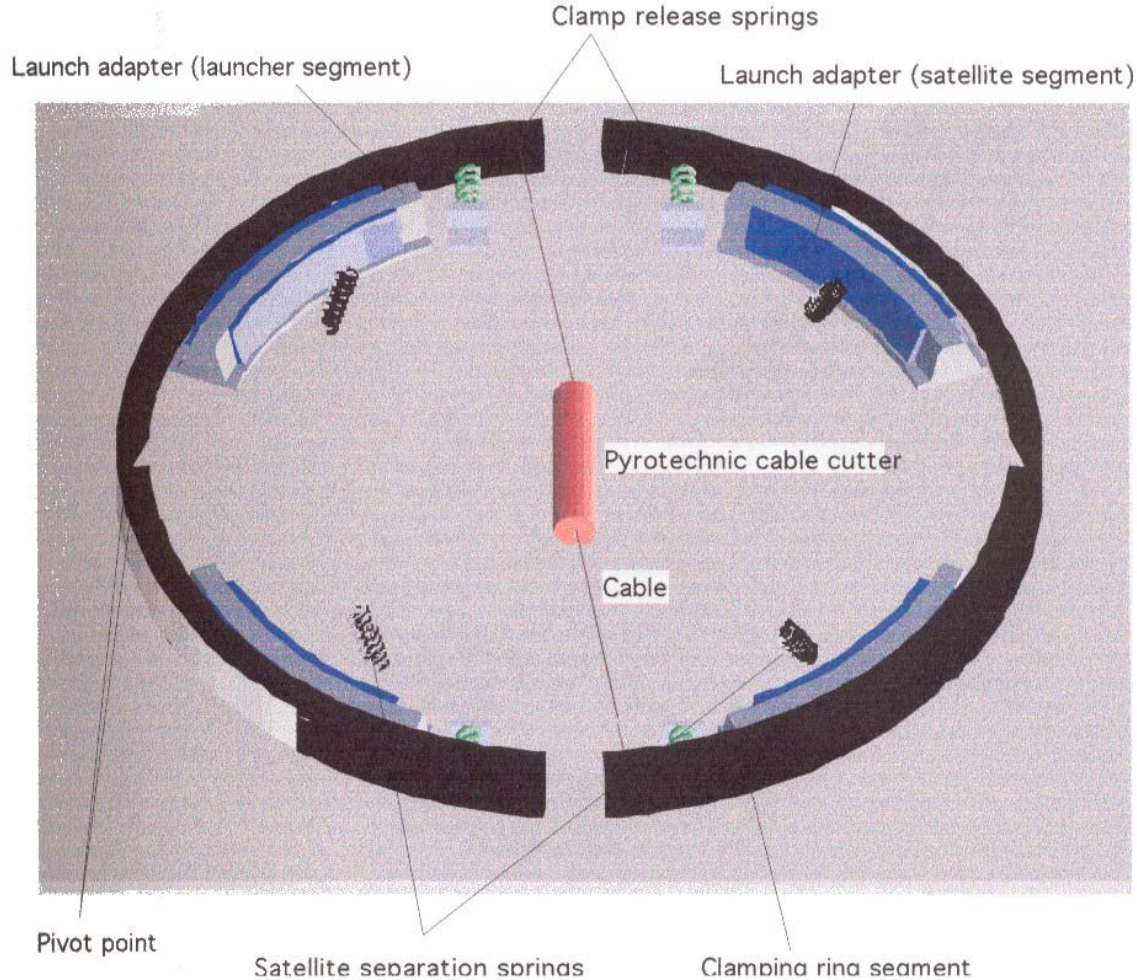

- The launch adapter system and solar array deployment system were found to be within their combined mass budget of 4% of the total satellite mass.
- The separation system will successfully launch CUSTARD from the adapter with the rates required by the Attitude Control Subgroup.
- A solar array deployment system has been designed which is more versatile than the original specification required but still falls within the same mass budget.
- Changing the orbit of the mission will have no adverse effect on the systems discussed herein.

B.3. Neville Fenn

This study focussed mainly on the design of a thruster manoeuvring system for the Custard nano-satellite. It was part of a larger study, based at the system level of satellite design and incorporates all the key features, which such a system should contain.

B.3.1. Primary Objective and Mission Overview

The primary objective of the mission was to demonstrate the useful application of Microsystems Technology (MST) in space. This demonstration was to take place by utilising a nano-satellite of total mass 4kg. As the project developed, it became clear that certain project parameters not previously set could be incorporated into the system to enhance the original design. The first one to become apparent was that of 3-axis control capability provided by the AOCS. It was realised quite early on that this could become quite feasible and so the project concentrated on allowing this. Another definition was that of orbit and orientation. The satellite is to be in a sun synchronous, noon-midnight orbit and will be constantly sun pointing as this will allow for maximum solar power raising capability.

B.3.2. System Level Design

The whole project was split into four main design groups and these groups were split further to complete the tasks that would be required of them. The AOCS group had a further split of the Actuator Systems into Thrusters and Reaction Wheels. The purpose of this report is to document the development of the thruster system. The thrusters are controlled fundamentally by the satellite power supply as it is this which actuates the various pressure valves. At a higher level the power regulation to these valves is controlled by the AOCS software or during certain mission phases the mission specific software. The only output from the thruster system is that of the pressure levels inside the Plenum Chamber that are fed directly into the AOCS monitoring software.

B.3.3. Thruster System Choice and Initial Sizing

The choice of which thruster kit to use in the main bus was taken after comparing several different types of system. The main option for a total system weight of 4kg is electric propulsion as there is a wide range, albeit largely untested, of systems available. However, the system opted for was that of Cold Gas Thrusters. These provide modest levels of thrust when compared to most electric engines and yet are extremely simple and reliable. The higher mass and lower efficiency levels are offset by the reliability, cost and varied functionality of the system. The first parameter that was established was the mass of propellant that would be required. This was sized to allow the system a lifetime of 90 days standard on-orbit manoeuvres with a high delta-V mission included. The mission of spacecraft interaction, as defined by the Missions group, was taken as an example of a high delta-V mission and the mass of propellant required to complete the task was added to the basic, on-orbit package. The only other manoeuvre that was considered was that of attitude capture after initial tip-off.

B.3.4. Thruster System Parameters

Certain parameters were then identified such as exhaust velocity and mass flow rate. These were calculated on the basis of a cold gas system at a plenum chamber pressure of 5 atmospheres. These values were then converted to give performance data for the thruster system as applied to the Custard main bus. The two main requirements for successful mission planning were thrust and torque although acceleration levels were also required for the planning of the nano space laboratory mission.

B.3.5. Conclusion and Further Work

When the performance of the designed system is matched against the requirements of the mission it can be seen that the system is capable of performing all the necessary functions that will be asked of it. The system, although slightly heavier than initially anticipated, is still within limits in terms of size and mass. It does not require a substantial amount of operational power and is extremely simple in both its design and actuation. This leads to the conclusion that the system although still in its initial design phase provides a comprehensive solution to the problem of spacecraft control.

There is still much work to be done on the design and this will have to be accomplished by the 2000 – 2001 MSc project group. There are two main areas of work needed. The first is the accurate modelling of the propellant in the system. This should be accomplished by analysing the system under static pressure and then, as it flows along the feed lines. The other area is that of component procurement. This last section is extremely important as it must be done as economically as possible, however, the problem should not be too severe as the system itself is, in essence, a pressure driven, gas expulsion system, examples of which can be found almost anywhere in modern day life.

B.4. Vincent Guillard

The project C.U.S.T.A.R.D. (**C**RANFIELD **U**NIVERSITY **S**PACE **T**ECHNOLOGY **A**ND **R**ESEARCH **D**EMONSTRATOR) is included in a student programme developed in and for UK to design and fly a first MST (**M**icro **S**ystem **T**echnology) demonstrator. The 24 students of the MSc were dispatched in 5 subgroups: Attitude and Orbit Control Systems, Electrical, Mechanical, Missions and Systems subgroups. During the beginning of the project we were able to belong to the Systems subgroup meanwhile we were studying a technical subject in one of the other four subgroups. As I was particularly interested by my technical research I decided to keep working on both aspects of the project during the whole group design project.

On one hand, I worked in the Attitude and Orbit Control Systems subgroup on the design of the de-orbiting system. As the new policies of NASA and ESA on orbital man-made debris leads to new system designs to avoid the creation of new debris in used orbits, the possibility of integrating a de-orbiting device was one of the main user requirements. Analysing the literature form NASA or ESA, I hence decided to first explain to the group the problem of the orbital debris and the importance of such a device. Then I defined the aims of such a device in terms of both qualitative and quantitative aspects. The next step was to make an overview of the possible systems and to dismiss any unsuitable one thanks to previous surveys on propulsion systems for small satellites provided by AIAA for example. Referring to precise technical documentation on low thrust or tethers systems, I then made a detailed design of the best ones and presented my conclusions to the group.

On the other hand, I was a team member of the Systems subgroup in charge of the overall group co-ordination. I was involved in the project decisions and group management tasks. One of them was a basic approach of the legal issues around a space project and the different important points to take care of during the design. Another one was the project time management and progress analysis through the use of classical manager's tools extracted from usual management books and theories.

As a conclusion, I can state that first a de-orbiting device can't be designed for a nano-satellite as regard the nowadays developments of useful devices. De-orbiting systems is a relatively new consideration for spacecraft builders as the pressure of space agencies is growing on this point so miniaturised devices of such systems are not yet available but research is in progress and solutions are not far from now. Secondly, about the study on team and project management, I can mainly conclude that even if a leadership policy of non-interference is strongly stimulating students it can be more efficient from the project point of view to grant more authority to one manager sharing the problems with the subordinates as a group and making the decisions together.

B.5. Brice Hillen

CUSTARD project was aimed at designing a 4 kg nano-satellite with a peak 6 W power consumption. Its orbit was set as being a noon-midnight polar orbit at an altitude of 800 km. This very small satellite was thought as a technology demonstrator, and this idea was found at each level of the design. The Onboard Communication Design for CUSTARD was driven by 3 main objectives:

- Respect of the tight mass, size and power budgets
- Search for best performance within these limits
- Search for reliability of the design

The scope of the work done this year on the onboard communication systems concerns the preliminary design. The tasks, which were carried out, are the following:

- Link Budget calculation
- Antennas & Transceivers design
- Coverage estimation in terms of average time available to communicate with ground
- Omnidirectional coverage calculation for the onboard antennas
- Definition of Communication Modes to improve the reliability of the design

Therefore, all the different areas of the onboard communication design were studied.

One of the main concerns was to find antennas and transceivers capable to fit into the tight mass, size and power budgets. Since CUSTARD is a forerunner in terms of nano-technology for space application, it was difficult to find existing hardware respecting those criteria. Basically, the hardware referenced for previous space projects was found to be too large and heavy. Consequently, two solutions were available. It was either possible to try to design theoretical antennas for the requirements of this project, or another solution was to look for off the shelf hardware not used yet for space applications. Both methods were carried out and produced valuable results.

The link budget calculation was aimed at optimising the values of the parameters for the communication design, so as to obtain the best performance from the selected hardware within a reliable safety margin. The performance was identified as being the peak data rate for the downlink that the design could achieve. The safety margin was identified as being the BER margin.

Once the antennas were selected, their number and orientation on CUSTARD were the subject of the omnidirectional coverage calculation. In fact, in order to improve the polyvalence, the reliability and the performance of CUSTARD, the antennas system was required to be able to transmit and receive in an omnidirectional way.
This was meant to make the communication design independent on the orbit, as well as to avoid the need for an attitude control manoeuvring to track the ground station.

The coverage estimation was aimed at providing an idea of the average time per orbit available to communicate with the ground, also in terms of pass duration over the ground station.

Finally, five communication modes were designed so as to allow CUSTARD to cope with any type of communication hardware failure during its mission, thus improving the reliability of the design.

B.5.1. Methods

The methods used in order to carry out these tasks were mostly based on calculations with Microsoft Excel. The idea was to create a comprehensive tool in the form of a spreadsheet. This spreadsheet was aimed at doing the following tasks:

- Calculate the link budget output parameters depending on the link budget input parameters
- Calculate the theoretical dimensions of 3 types of antennas to meet the requirements of the project
- Give an estimation of the time per orbit available for communication with the ground

In order to create each of the 3 parts of this spreadsheet, the following steps were followed:

- Identify the parameters
- Distinguish between input and output parameters
- Identify the equations allowing to calculate the output parameters from the input parameters

- Integrate the parameters and equations in the spreadsheet

As for the omnidirectional antenna coverage calculation, the calculations were carried by hand, since the determination of the number of antennas needed and their orientation was merely a geometry problem. This study was carried once the antennas were selected.

The final task, which was the improvement of reliability through the design of communication modes, required the results of all the previous tasks in order to integrate them in a mission-related background.

B.5.2. Results

The antennas selected for the project set the operating frequency band. In fact, suitable off the shelf antennas were finally found for this project. Since those antennas are designed to work between 9.1 GHz and 12 GHz, this is the frequency range that had to be adopted.

Among the features of the selected antennas, the most impressive one is their weight, which is only 5g per antenna. Since 4 antennas are mounted on CUSTARD, their total weight is only 20g. They also offer an 80° HPBW in elevation angle plane and omnidirectional coverage in azimuth plane.

Suitable off the shelf transceivers were found, but not for the chosen frequency range. However, it was assumed that transceivers endowed with the same performances in terms of mass, size and power consumption could be either found or manufactured for the X Band.

The assumed transceivers offer 0.1 W maximum RF Output Power, for an input power of 0.7 W in transmit mode and 0.3 W in receive mode. Two transceivers were integrated in the design, one being dedicated to transmit and the second one to receive. The mass of 1 transceiver is 40g.

Therefore, the mass of the onboard communication hardware (antennas + transceivers) is 100g. The choice of the transceivers set the values of the power budget. Since CUSTARD is designed to receive and transmit simultaneously, the peak power consumption of the onboard communication system was 0.3 + 0.7 = 1 W.

The data rate theoretical peak value was found to be 1 Mbps. This value was achieved by selecting the BPSK with Reed Solomon Encoder and Viterbi Decoding as the modulation technique, and is valid for a minimum 12 m dish on the ground. The resulting safety margin is

above 2.7 dB for elevation angles of CUSTARD above 13.9°, which means during 90 % of a pass over the ground station. For the 10 % of the pass corresponding to elevation angles between 5.9° and 13.9° (I-e CUSTARD close to the horizon line), a lower 0.5 dB safety margin was accepted. However, a 600 Kbps data rate appears to be a better compromise between performance and reliability. This value should be used in practice.

The recommendations of the CCSDS were followed for the choice of the data protocol. The omnidirectional coverage in both transmit and receive mode was achieved by installing 4 rugged dipole antennas, as shown on the figure below:

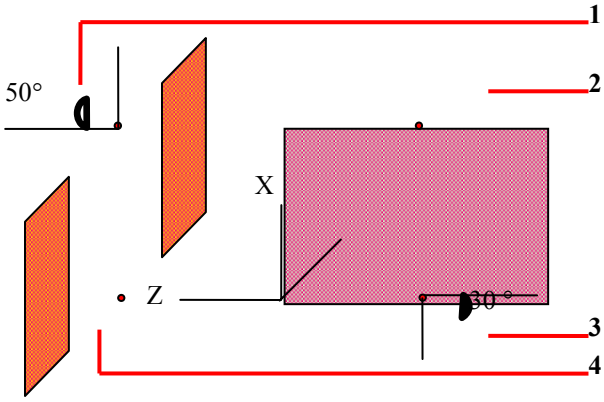

The results obtained for the link budget calculations are summarised in the table below:

PARAMETER NAME	VALUE	UNITS
F	9.1 to 1	GHz
Peak Data Rate		Mbps
	0.00	
	2.7	dB
Minimum Elevation Angle	5.9	degrees
Power Consumption of the Receiver	0.3	W
Power Consumption of the Transmitter	0	W
Peak Power Consumption of the System	1	W
Omnidirectional Coverage	Y	
Attitude Control System Dependent	NO	
	5	g
Dimensions of 1 Antenna	6.4 x 5	mm
	4	
Total Mass of the Antennas		g
Mass of 1 Transceiver	40	g
D r	69 x 39 x 1	mm
	2	
To	80	g
Total Mass of the System	100	g
Ma e	0.1	W
RF d	0.1	W
Safety Margin	85	%

Table B.5.1 : Summary of Main Numerical Results

B.5.3. Discussion & Conclusion

It appears that the mass, size and power budgets allocated to the onboard communication design were fully respected.

The very high value for the peak data rate (1 Mbps) is mostly aimed at a technology demonstration purpose. In practice, a lower data rate, for instance 600 Kbps, should be adopted, because it still provides a high performance but with an increased safety margin. In addition, the limited storage capacity of the onboard computer means that the high data rate capacity cannot be exploited at its best. However, should the storage capacity be increased, or a more powerful payload plugged directly into the communication system, the very high data rate capacity would prove to be useful.

The antennas are not space qualified, because the materials used to manufacture them are not designed for the space environment. However, the manufacturer (European Antennas Ltd) could design the same antenna with space-qualified materials, but it would induce expensive development and testing costs. Yet, these antennas prove that the current off the shelf technology can meet the requirements of nano-satellite missions like CUSTARD.

As for transceivers, the assumption made on the fact that suitable transceivers can be found for the X band is justified by a new transceiver designed by Xetron for the S band, the Hornet, which is even smaller than the ones designed for lower frequencies.

Because of the choice of a sun pointing noon midnight orbit, the transmitting antenna always changes with the position of CUSTARD on its orbit. For this reason, the communication modes present a way of always switching on the right antenna to transmit, without the need for any attitude control or onboard position calculations. The communication modes also bring safety to the design. Moreover, CUSTARD is capable to receive uplink whatever its attitude is, thus making its recovery easier in case of attitude control loss.

The future areas of work would concern the search for an actual existing X band transceiver, as well as the search for space qualified materials to build the antenna. The design could also be negotiated directly with the manufacturer (European Antennas Ltd). Finally, the data protocol should be reviewed in more details.

Consequently, according to the results, the onboard communication design for CUSTARD appears to be driven by 3 concerns: respect of the budgets, search for best performance and reliability.

B.6. Kevin Hughes

The new trend in the space industry is the development of Micro-system Technology (MST). MST enables the possible implementation of smaller satellites, which can perform the same science that the larger, traditional satellites can perform. It follows NASA's paradigm of "Cheaper, faster, better", and is in stark contrast to the traditional satellite systems of the 1960's and onwards.

The purpose of this year's Group Design Project was to perform a Phase A preliminary analysis on the feasibility of developing a nano-satellite, which has the following specifications. The project was called CUSTARD, which is an acronym for the **C**ranfield **U**niversity **S**atellite **T**echnology **A**dvanced **R**esearch **D**emonstrator.

Mass	< 4kg
Peak Power	6 Watts
Average Power	3 Watts
Lifetime	> 3 months
Orbit selection	Mission dependent
Attitude control systems	Mission dependent

Table B.6.1 : The design specifications of the Group Design project

One of the main aims of the project was to develop a satellite that was capable of being a technology demonstrator. This would make the project particularly attractive in obtaining funding, which is critical if a launch is to be secured in the next couple of years. The satellite could be designed so as to test completely new ideas in space, or space qualifying flight ready components. The idea is to show that the same high quality science can be performed just as well as on a nano-satellite, as it is on its larger commercial "Brother".

This report details the thermal analysis performed on the CUSTARD nano-satellite. Space is an environment of great hostility, particularly with regard to sensitive instruments and sub-systems onboard satellites. Possibly one of the most hostile environments ever encountered is that of the thermal one, as the satellite will experience a constant variation of temperatures as it passes from sunlit into eclipsed conditions.

These large fluctuations in temperature can cause havoc for sensitive electronic systems, and may result in them not working, if the ambient temperature falls below the operational tolerances of the equipment. To this end, the importance of an effective method of thermal control becomes apparent.

The purpose of this part of the group design project was two-fold. Firstly, to simulate how the skin temperature of the satellite varies as it performs its orbit, and secondly, to determine the degree of insulation required for the individual components used onboard, paying particular attention to the payload. Before any designing could begin, the basic parameters of the problem needed to be defined.

B.6.1. Orbit Configuration

CUSTARD lies in a 800km Noon-Midnight orbit, and is inertially pointed towards the Sun. This means that the satellite lies in the Earth-Sun plane, and that there is a constant cross sectional area presented towards the Sun. The diagram in Figure B.6.1 (below) shows the nano-satellite in four different positions, with the yellow bar representing the solar cells. The satellite will have to operate in both eclipsed and sunlit conditions, and as a result, it will experience wide fluctuations in temperature.

The cross-sectional area presented to the Sun as the satellite goes round its orbit, is constant. However, the area presented towards the Earth varies. This will affect the albedo, and the infrared contributions incident upon the satellite, and will have to be taken into account in the thermal model.

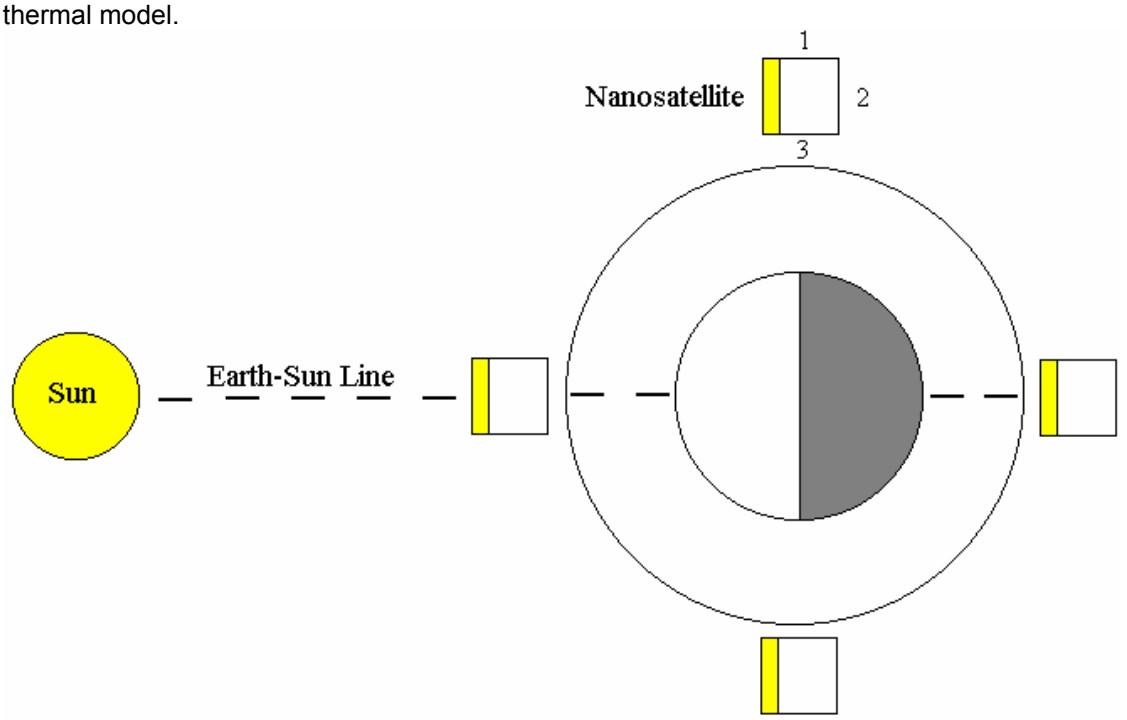

Figure B.6.1: Side view of the orbit chosen for the mission

B.6.2. Basic Structure

The outer shell structure of CUSTARD can be seen below in figure B.6.2.

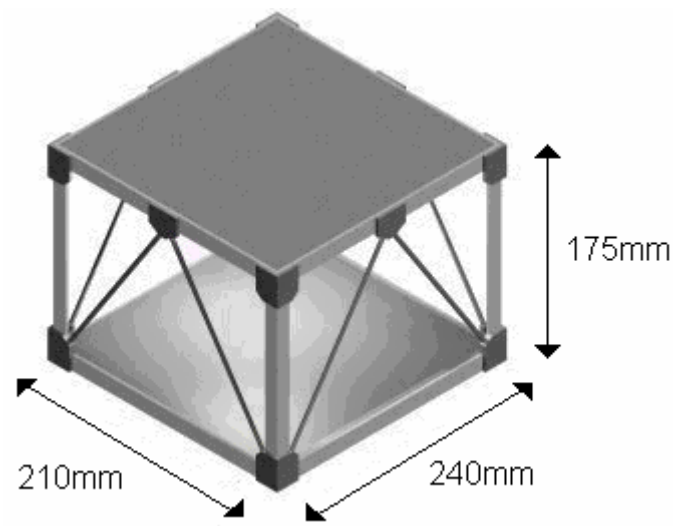

Figure B.6.2: The main structure of CUSTARD

The main structure of CUSTARD consists of two aluminium honeycomb panels, which are supported at the corners by beam sections. The side sections were left open, as the present

structure was sufficient to withstand the launch environment. By filling in the sides, it results in the main structure going over its system defined mass allocation of 20% of the 4kg total mass.

However, from a thermal point of view, it is undesirable to have open sides. Initially, it was assumed that the open sides were covered in thin aluminium foil. The foil would be negligible in weight, but would make it easier to model if all the surfaces were homogenous. This was a starting assumption, and the model was refined as the analysis progressed.

Three spare solar cells were added onto the other surfaces, which were just sufficient to provide 2W of power. The justification for this was that if CUSTARD lost its orientation and was tumbling out of control, then there would be at least one side presented to the Sun. This would provide sufficient power to the processor and AOCS, so that control and orientation could be regained.

The end face presented towards the Sun was completely covered in solar cells, so as to provide as much power as possible. There were also two deployed solar panels, which had a surface area equal to the largest sides of the satellite.

B.6.3. Isothermal skin temperature

The thermal environment was modelled using MS Excel, which enabled the varying fluxes due to the Earth and the Sun, to be simulated. The albedo, solar and infrared contributions were all incorporated into the design. The satellite itself was modelled as an 800g shell of aluminium. This represented the main structural mass only, and was used later when taking into account the thermal inertia of the skin.

The model was assumed to be isothermal. Even though this is a limiting factor, it was necessary, so as to simplify the problem. The model was becoming too complex, and ideally, some form of FE analysis package will be needed in the future.

CUSTARD has two different configurations of solar cells; Body mounted, and two deployed panels. It was decided that the fluxes incident upon the body mounted solar cells, passed directly into the satellite skin. This provided quite a significant heat input into the satellite skin. This assumption was needed, so as to enable an isothermal skin temperature to be calculated.

The deployed solar panels were treated slightly differently. The same equations were used, as for the body-mounted panels, but it was assumed that they were thermally insulated from the skin. This meant that there would be no conductive contribution through the hinges and into the skin. However, there will be a definite radiative contribution into the sides of the satellite, due to the solar panels radiating as blackbodies. The equations were developed, so as to get a realistic view of the skin temperatures of the deployed panels, as a function of position in the orbit. Their thermal inertia was taken into account, and resulted in the following temperatures.

Deployed Solar Panels	
Maximum Temperature	$+103^0$C
Minimum Temperature	-59^0C

Table B.6.2: The maximum and minimum isothermal skin temperatures of the deployed solar panels

As can be seen from table B.6.2, the deployed solar panels will provide a significant radiative contribution. The calculations were performed using the original configuration of aluminium foil

on the sides of CUSTARD. This resulted in a constant heat input of 20W, over the sunlit part of the orbit.

The only variable in the equation was the emissivity of the sides of the satellite, as it was directly proportional to the magnitude of the radiative contribution. This was minimised by using a gold finish on the two sides, which face the deployed panels. The gold surface also limits the overall heat loss of the satellite, as it tries to offset the losses that occur due to the body-mounted solar cells that have an emissivity of 0.89.

The overall effect of the different surfaces is to lower the temperature of the satellite when in the sunlit part of the orbit, and to raise the lower temperature when in eclipse. Taking into account the thermal inertia of the different materials, the following results were obtained.

Skin Temperature of CUSTARD	
Maximum Temperature	+46^{0}C
Minimum Temperature	-39^{0}C

Table B.6.3: The isothermal skin temperature results for CUSTARD

The final configuration of CUSTARD, showing the different materials used in its construction, can be seen in figure B.6.3 below.

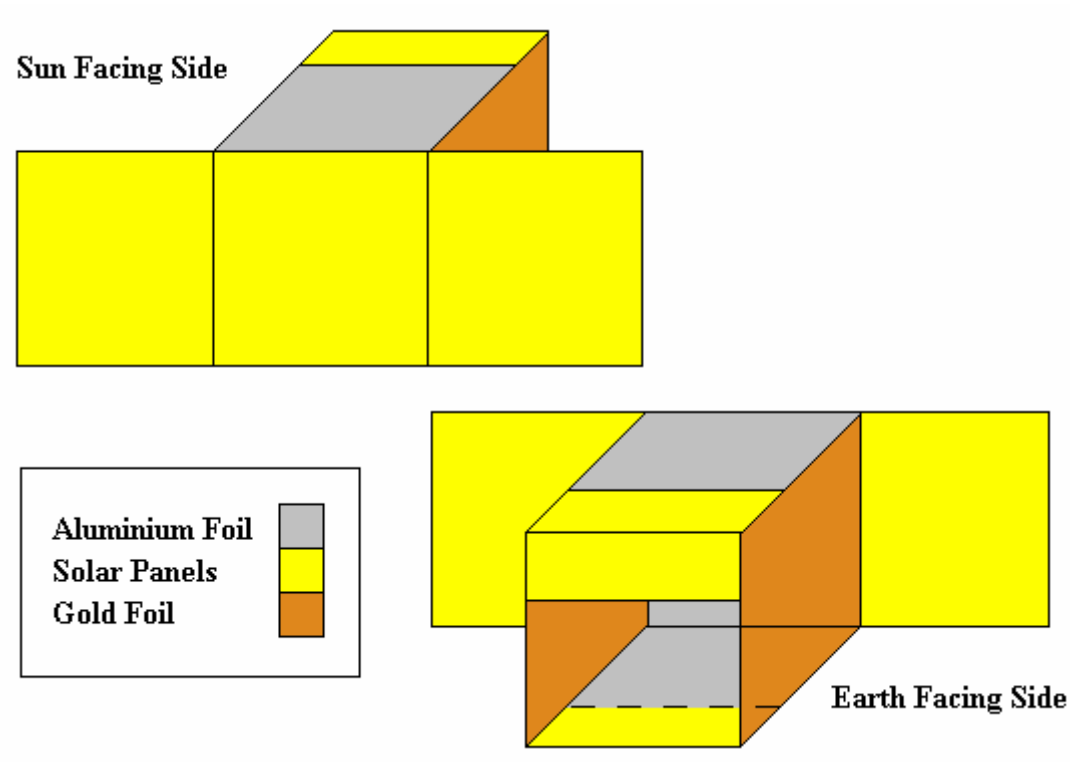

Figure B.6.3: The final configuration of CUSTARD, showing the different surfaces used to keep the skin temperature between +46^{0}C and –39°C.

B.6.4. Payload

The purpose of this part of the analysis was to see whether or not it was possible to create a stable environment for the payload, which in our case, is a nanolab experiment. The *Missions Group* have decided upon placing a temperature sensitive experiment inside, to investigate fluid flow in a micro-gravity environment.

Once the skin temperatures had been determined, it was possible to consider the effects this would have on the internal equipment. The payload was taken to be thermally isolated from the skin, and was achieved by placing it on four thermoset plastic supports, and wrapping the remaining surface area with multi-layer insulation (MLI). This limited the conductive and radiative contribution from the skin respectively.

The payload was considered to be switched off initially, to see what equilibrium condition it would reach, by it responding to the changing skin temperature fluctuations. The view factors from the other internal equipment were not considered, as it was assumed the dominant process was through the skin. The thermal inertia was taken into account, and the temperatures were calculated at each 5° interval, and resulted in the payload reaching the stable condition of 14.2^{0}C.

The worst-case scenario was considered to occur when the payload is switched on for the entire orbit, generating 4W internally. This resulted in a rapid increase in temperature, which would be unacceptable as the experiment could be temperature sensitive.

This resulted in a radiator having to be incorporated into the design, so as to regulate the temperature of the experiment. It was assumed that the radiator was thermally decoupled from the skin, and that it would be placed on one of the sides containing the gold foil, which face into deep space. The dimensions for the radiator can be seen in table15 below.

Q to be dumped (W)	4
Temperature of the radiator	14.2^{0}C = 287K
Radiator Area required (m^2)	0.01168
Length of Radiator (m)	0.108
Width of Radiator (m)	0.108
Fraction of side area covered	28%

Table B.6.4: Dimensions of the radiator required

The analysis then dealt with the possible problems of having the radiator facing deep space, when the experiment was switched off. This may be an unacceptable loss of heat, so an investigation was made into possible solutions to prevent this problem.

B.7. Tarek Jany

The 1999/2000 ASE group design project forms part of the AMSTAP project to design and build a student nano-satellite to demonstrate Micro Systems Technology, MST, in space. MST results in the miniaturisation of subsystems, with the ultimate goal being to integrate them onto a chip.

The secondary objectives imposed on the design were:

1) To use a SMA to deploy solar arrays.
2) To make the satellite as light as possible.
3) To use commercial off-the-shelf technology.
4) To design a versatile satellite bus

Four missions were proposed for the satellite: Nanolab, Spacecraft Interaction, Debris Detection and Imaging Platform. The nanolab and the interaction missions were developed by the missions team as interchangeable, modular payloads. The nanolab is to be used for thermocapillary flow experiments in a micro-gravity environment, whilst the interaction mission involves the detection of and the manoeuvring around a host satellite.

The orbit will be dependent on who agrees to launch our satellite. There are launch opportunities for both LEO and GTO. It was decided that the LEO orbits should be sun-synchronous; terminator and noon-midnight orbits represent the best and worst case scenarios for available sunlight.

B.7.1. CUSTARD: A Student Nano-satellite

The project team was divided into several groups, each with a specific role in the design of CUSTARD (Cranfield University Satellite Technology Advanced Research Demonstrator). The systems group was responsible for the overall management of the project.

As a member of the electrical group, I was responsible for power storage, regulation and distribution.

CUSTARD is made from an aluminium frame that supports two aluminium plates on the top and bottom sides. On the four remaining sides, solar arrays and MLI are attached. CUSTARD measures 17.5cm x 21cm x24cm. Radiation protection is not provided.

To provide 3-axis control, CUSTARD will employ 4 reaction wheels and eight propane thrusters. The thrusters can provide rotational motion (to dump reaction wheel momentum) as well as translational motion. Position and attitude will be determined using a magnetometer, a sun sensor and gyroscopes. The use of a GPS receiver will be optional.

Solar arrays will provide power during daylight. Two solar arrays will be deployed using shape memory alloys, which can be made to ‘spring’ open when heated. A custom built microprocessor from RAL will be used and SRAM will be added to cope with imaging requirements of the payloads.

Communication with the ground station will be achieved via four small antennas- two at the front (the end facing the sun) inclined at 50^0 to the normal and two at the back inclined at 30^0. The downlink frequency will be between 9.1 and 12GHz. The transmission rate will be 1Mbps to cope with imaging from the CCD cameras needed for both missions. CUSTARD will use two ground stations, one at RAL and the other in Kiruna, Sweden.

B.7.2. Power Generation

The maximum power required by CUSTARD is 13.3W. Several options to raise this amount were investigated.

Static power sources such as Radioisotope Thermoelectric Generators require high temperatures for thermal-electric conversion. These are provided by radioactive sources. Static power devices are massive and are subject to adverse public and political opinion.

Dynamic power sources use heat to expand a working fluid to drive a turbine. This system is rather complex, especially if the temperature differential is provided by the sun as a storage device will also be required. A MST dynamic power cycle, which uses micro valves and pipes, has not yet been space proven.

An EMF can be generated when a loop of wire is moved relative to a magnetic field. However, the rate of change of the geomagnetic field is so small that a large and therefore massive loop of wire is needed.

Micro fuel cells are light and occupy little volume. They require fuel e.g. hydrogen and an oxidiser, both of which can be recycled. MST fuel cells are neither commercially available nor space proven.

Solar arrays use the photoelectric effect to generate an EMF. They are cheap, reliable and are widely used on Earth Orbiting satellites. CUSTARD will therefore employ this method for power generation. This solution also provides an opportunity to demonstrate the SMA actuator.

B.7.3. Energy Storage: Batteries

To provide power in eclipse rechargeable batteries are necessary. Like a fuel cell, batteries convert chemical energy into electrical energy.

Nickel Cadmium (NiCd) and Nickel Hydrogen (NiH_2) batteries have a low discharge voltage and a narrow temperature-operating band. However they are space proven and are resistant to overcharge. Over long missions, their capacity is significantly effected due to the “memory effect”. The NiCd battery is best suited for LEO’s because many low depth discharges are needed. NiH_2 is better suited for GEO’s for precisely the opposite reason.

Lithium ion batteries have a higher specific energy density and discharge voltage compared to the nickel batteries. Other advantages include high efficiency, low self-discharge and a wide temperature operating band. Unlike standard lithium ion batteries, the Ultralife polymer battery is resistant to overcharge. These batteries are flat and are made using MST techniques. Because they are entirely solid they cannot leak.

It is recommended that the Ultralife lithium ion batteries be used. Because they are rated at 2.8Wh, 6 are required to provide the 16.394Wh needed in the LEO and the 16.838Wh needed in the GTO. 9 batteries will be employed on CUSTARD arranged in three parallel strings, each with three series connected batteries. One string is redundant. These batteries, in this configuration are able to provide power for each eclipse (maximum 35 minutes in the LEO, 70 minutes in the GTO) for a 3-4 month mission. This is only true if the correct depth of discharge is selected: 50% for the missions in LEO and 97% for the missions in the GTO. The Ultralife batteries have an end of life capacity of 0.55Ah, which meet the requirements imposed by both orbits and both missions.

A primary battery (a battery which cannot be recharged) has been added to the EPS design. This will provide extra power when CUSTARD is first ejected from the launch vehicle. Possible applications are:
1) SMA Solar Array Deployment

2) Attitude Control
3) Microprocessor Power
4) Emergency Power (“standby redundancy”)

MLI should be used on the batteries to keep them warm if thermal analysis finds the temperatures too cold (<0^0C) during/straight after eclipse.

B.7.4. Power Regulation

There are two approaches to control power from the solar arrays. The Direct Energy Transfer method dissipates unwanted power using a shunt regulator. The other approach is to use a peak power tracker in series with the solar arrays to draw the exact power required.

A PPT will be used in CUSTARD as this performs optimally (and has a lower system mass) for low power and low orbit missions. Although this approach has lower system efficiency and higher electromagnetic interference than a DET based system, these effects are not likely to be significant during the mission.

The bus voltage can either be unregulated, fully or quasi-regulated. In the first case, the bus voltage is that of the power source. A quasi –regulated bus uses a battery charger to control battery charge voltage.

A fully regulated bus will be used in CUSTARD. This employs both charge and discharge regulators. Charge regulators are needed to provide constant voltage and constant current at 0.5C for a specific length of time. Maximum charge times are given in the table below:

Worst Case Mission Charge Times (In Hours)

MISSION	Noon-Midnight	GTO
Nanolab	0.88	1.84
Spacecraft Interaction	0.94	1.96

During these times the solar arrays will provide 8.325W for charging.

Discharge regulators are needed to increase the discharge rate as the mission progresses. This is because the batteries loose some of their capacity. At the beginning of life, a discharge rate of 0.85 and 0.83C is needed for the missions in LEO and GTO respectively. A rate of about 1.1C will be required at end of life.

Below is a schematic representation of CUSTARD’s EPS, showing the positions of the regulation devices.

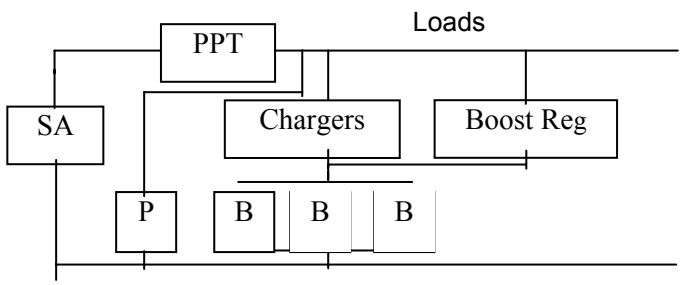

Boost Reg: Discharge Boost Regulator
SA: Solar Array
B: String of 3 series-connected batteries
P: Primary Battery
PPT: Peak Power Tracker

B.7.5. Power Distribution

Systems for distributing power can be either centralised or decentralised. The former implies a regulated bus and requires dc-dc converters for extra regulation. The latter implies an unregulated bus and only uses dc-dc converters. CUSTARD has a regulated bus so the centralised approach will be used. This approach is versatile (i.e. can be used for all the missions and orbits) and is preferable for small, low-powered satellites.

Bus voltage can be either ac or dc. Because CUSTARD's instruments do not require ac input, and because the solar arrays and batteries supply dc power, a dc bus will be used. A further advantage with the dc distribution system is that it has a lighter mass.

The power will be distributed along a multi-stranded copper harness. Harness mass can be reduced by attaching subsystems to CUSTARD's circuit boards. This approach is a step toward the MST goal of subsystems-on-a-chip.

To increase the probability of mission success, fault protection tests will be carried out during the assembly process.

Environmental tests will be carried out to ensure the EPS can survive launch and operation conditions. An electromagnetic compatibility test will determine whether or not CUSTARD meets important EMC standards. It should also give inkling as to whether EMI will effect CUSTARD's performance. Performance tests are to be carried out to test equipment, connections and current/voltage limits. Lastly a Failure Modes, Effects and Criticality Analysis should be carried out to identify and eliminate all single point failures.

Component level redundancy in the EPS electronics will not be used because of the mass and volume implications this would have. However because launch-induced harness failure is common, dual redundant connectors should be used.

A further recommendation is the use of fault protection circuits on load components. These will indicate where a failure has occurred. This is important especially if the fault has occurred in an instrument that is being demonstrated.

B.8. Dimitris Karpouzas

Current satellites are becoming ever bigger, more complex and usually are unique design products dedicated to a specific mission. This attitude leads to higher development, launch and operation costs. Additionally, these systems require large development and testing procedures and in case of a single component failure may cease to perform their allotted mission.

Due to the recent advances in micro-engineering, which are creating more compact components that perform as well as their larger examples, it is possible to change the above approach towards satellite engineering and utilisation.

This report is part of a larger effort for the design of a nano-satellite analysing two main subjects within the design procedure. First there is an introductory section outlining the reasons that led to the nano-satellite project. This section also contains an introduction on the methodology followed during the design. In the bibliography section selected extracts from various sources are used to prove the usability and advantageous characteristic of nano-satellites.

The report is separated into two main subjects that analyse:

c) the launch schedule during the years of 2001/2003

d) the spacecraft interaction concept demonstrator

This separation is apparent both during the design methodology analysis and during the actual result presentation.

During the discussion and conclusion sections there is a discussion of the report findings, results are compared with actual capabilities and limitations and relevant missions are put into context for the comparison of the analysed missions.

It has become apparent during the design procedures that nano-satellites may prove to be very useful space based vessels that can be used in a variety of tasks. They can substitute and in some cases perform better than the conventional satellites. Engineering is undergoing rapid changes providing novel technologies that can be utilised into new concepts that can make space more cost effective and approachable.

The aim of the 99/00 Group Design Project was to develop a conceptual design for a nano-satellite. The specification guidelines given at the initial stages of the project were:

Mass < 5kg

Power: 3W mean; 6W peak

Lifetime; minimum 3 months in orbit

No restrictions were given as to the method that should be used to achieve the above targets. No definite mission was set. Therefore, as a starting point, an assessment should be done as to select missions that would be more appropriate to the capabilities and limitations of the nano-satellite.

CUSTARD is a generic satellite bus containing sub-systems within the initial specification (3W, 5kg). Use of micro-components (microprocessors) and novel techniques (shape memory alloy for solar panel deployment) were also incorporated. Missions and payload group was

responsible for proposing suitable missions and the instrumentation suitable for supporting the proposed missions. An overall aim was to produce a capable satellite bus that would provide high reliability, multi-role capability and accommodate potential capability for combined missions with other spacecraft.

B.8.1. Launch Schedule

The initial personal task undertaken was to conduct a research on the current and future launch schedule and mission planning. This was done because it was a good idea to have an understanding and a database of the space missions under development for the near future. This database would allow the design team to identify possible launch opportunities. Since the proposed nano-satellite design is a technology demonstration on the European space programme it could be feasible to attract enough attention as to secure a free ride in one of the planned scientific European missions. This opportunity is achievable only due to the small volume, mass of the satellite. All the launchers delivering payloads in orbit have capacity that is not entirely used allowing the presence of a passenger payload. Another dominant factor in securing a launch is the assurance that the presence of the passenger will not endanger the prime mission and any of the results produced could be available for use by the other participating parties.

Internet sites were accessed including space agencies, manufacturers and operators in order to establish a coherent launch schedule and mission programming. A database has been constructed for the launch years of 2001/2003 that it is within the set design and development phase. All the obtained results are presented in the relevant report sections.

B.8.2. Interaction mission concept

The interaction mission demonstration is developed to provide a technology demonstrator for spacecraft precision formation flying. This will be accomplished by station keeping, exchange of status information and manoeuvring in synchronisation. The interaction concept analysed in the relevant report sections is an initial concept as to the main functions that a demonstrator has to perform in order to prove that a mission can be accomplished.

In order to reduce the mission complexity and limit the costs involved it was decided that a single spacecraft would be used and interact with the upper stage/release module of the launcher. The nano-satellite has to perform a series of synchronisation flying and manoeuvring relative to the passive subject. These functions have to be performed by using a monitoring facility onboard the satellite that will be able to detect the subject in space and record its position relative to that. Moreover the satellite must have the ability in terms of AOCS to perform a series of movements relative to the target. This effectively implies a very capable stabilisation system and a thrusting system capable to provide the ΔV needed for each manoeuvring.

All this activity must be supported by communication systems to relay data on the ground station. Data processing and storage is an important factor influencing the mission success. In order a nano-satellite generation to be successful it must be intelligent and capable to perform functions that will not require interference from the command station.

The report contains a mission proposal for operations and the basic formulae needed for the mission are given. Spreadsheets are also included giving a ΔV estimation on the operational heights 800km and 460km. An operation schedule is also proposed that will satisfy the demonstration of an interaction concept. All the proposed manoeuvres are taking place in travels less that 1km. This is important for the accuracy of the performed manoeuvres and the governing equations used.

B.8.3. Conclusions

LAUNCH SCHEDULE

The research succeeded the target set as to provide a database for future launch programme, the launch vehicles involved, the missions that would be launched and the organisations involved. The database in combination with the bibliography and the Internet sources listed will provide a tool for mission scheduling. This hence will be useful for contacting the organisations involved and co-operating for a combined launch.

It is rather important that the schedule should be constantly monitored and the database updated to accommodate for any changes that will occur. Missions are getting delayed or altered due to various reasons and constant monitoring can compensate for these changes.

INTERACTION CONCEPT

The results were compared with the limitations and abilities of the satellite bus system and were proven to be within the limits of the systems. This was in terms of power, AOCS and fuel system. The power generated and stored is adequate for the power consumed by the instruments. The AOCS provides a 3-axis stabilisation that is accurate for monitoring routine. The fuel system can provide the thrust required for station keeping and manoeuvring. The ΔV budget in the spreadsheets was found to be capable of supporting the mission planned.

All the results and recommendations proposed in this report need further development that it was not possible to be performed in such limited time allocated to the project. Initial design analysis succeeded in producing initial results on the mission. Therefore these results and recommendations should be used as a starting point for the detailed development of the interaction mission.

Finally, it is essential that alternative mission and payloads should be examined and this is due to the versatility and multi-role capability of the nano-satellite bus.

There are a lot of areas that could be researched concerning nano-satellites and their applications. As it is a novel technological application their potential has not fully exploited as yet. Nano-satellites can be applied to a variety of different applications some of each are:

- Interplanetary exploration
- Data relay elements of a global coverage system
- Scientific and data measuring constellations
- Inspection and mission augmentation elements for large missions (i.e. International Space Station)

As far as the instrumentation and payload onboard a nano-satellite is concerned, there are a lot of proposals and some of them will be given the opportunity to be tested as new concepts onboard nano-satellites. These technologies are analysed in the payload applications section 4.7 but there other that are still in a very preliminary stage. Proposed payloads that transform the nano-satellite mission are:

- Micro and nano instruments must be developed and substitute existing equipment.
- Solar sails for attitude control.

- Imaging instrumentation tailored to mission specific components (e.i. CCD specific for earth or space based imaging).

- De-orbiting (propulsion systems have to be developed to accommodate for de-orbiting nano-satellite elements of a constellation).

- Data collection from 'dangerous areas' that more expensive satellites should not populate.

The design procedure as an overall effort; endeavoured to research and develop critical technology that could prove the advantages of the nano-satellite. All the systems proposed provided a base line design that satisfied the requirements and exceeded the 3-month minimum orbit time in one year for most of the systems. In the future further analysis and development is required for all the systems in order to finalise the design identify potential weaknesses and produce a functional end product.

It would have been a good idea to investigate the following applications in a later stage because these concepts may prove to be of extended use for nano-satellites.

- Laser systems for data exchange between the satellites must be exploited since it provides accurate and fast data relay method.

- Deployment of two or more interacting elements.

- Application of a nano-satellite in the ISS (mounting/release issues as well as safety, collision avoidance system), this is analysed in terms of ΔV required in the 4.7 section.

In a latter stage the interaction mission should be undertaken by the attitude and orbit control group that is the most qualified for calculating the orbital manoeuvring and station keeping during an interaction mission. Their design could predict in a great accuracy the performance required from the AOCS and the fuel required for the manoeuvring.

B.9. Richard Lowe

B.9.1. Motivation

The aim of this project was to develop a satellite design capable of demonstrating the United Kingdom's ability to implement Micro-Systems Technology in Space. Micro-Systems Technology or MST is an emerging market within the electronics industry. MST devices typically combine traditional silicon microchip functions with sensors and micro-actuators, enabling entire Systems to be implemented on one chip.

The work performed for this project was a contribution to the Aerospace Micro-Systems Technology Applications Partnership (AMSTAP) programme. AMSTAP's purpose is to bring together developers of MST in the United Kingdom and seek new ways of exploiting the technology. Other contributors to AMSTAP include Matra-Marconi-Space UK, Southampton University and the Rutherford Appleton Laboratory.

B.9.2. Development Environment

The Cranfield University Satellite Technology Advanced Research Demonstrator (CUSTARD) is being developed as an on-going project by students at Cranfield University, with a planned project lifetime of 3 years. This period begins with development of a Mission Concept and follows through to final assembly and launch. It is hoped that many of the sub-systems on the spacecraft will be supplied at reduced cost by the UK space industry. The small size of the CUSTARD spacecraft will enable it to be launched as a secondary payload, at minimal expense.

B.9.3. Spacecraft Design

CUSTARD has been designed to be capable of a broad range of missions. The satellite, which weighs approximately 4 kg, consists of two distinct parts:

- **A Multi-mission Bus** that provides power, communications, attitude control and orbit maintenance.

- **A Mission-specific Payload module** containing MST experiments and devices

This separation of functions allows CUSTARD to be re-used time after time, with different payload modules. The philosophy of a re-usable Bus will enable cost reductions in Space MST testing by limiting mission development costs to the payload module.

CUSTARD has been designed for use in Low Earth Orbit (800-km altitude), which reduces the load placed on communications systems and Radiation shielding. CUSTARD uses three-axis stabilisation, supplied by reaction wheels and cold gas thrusters. The satellite will maintain one face towards the Sun during normal operations, allowing maximum power to be collected by the solar arrays without using motor-driven, sun-tracking arrays. Advantages of such a system include simplified thermal design and reduced solar array mass.

CUSTARD's attitude control system allows it to maintain a fixed, inertial attitude. This enables the Bus to support micro-gravity experiments in the payload module.

B.9.4. Critical Systems

The reliability of the CUSTARD bus has implications not only for success of the mission, once in Space, but also for getting it there in the first place. Clearly, an unreliable Bus will not provide value to its investors and may prevent the project from ever getting launched. Since CUSTARD will be launched as a secondary payload, it must pose no risk to the primary payload or the launcher. Close attention must be paid to the Launch adapter, primary structure and thruster system to ensure that malfunctions will not occur during the launch.

Once in orbit, emphasis moves to the electrical sub-systems as the priority. Functions such as power raising and distribution, communications and data-processing are all critical to the success of the mission. The CUSTARD bus can cope with most losses in the Attitude Control & Determination sub-systems. Redundant solar arrays and intelligent use of communications antennae enable CUSTARD to maintain basic operations, even in the event of total attitude control loss.

B.9.5. Power & Mass Budgets

The target mass for the CUSTARD satellite was four kilograms. The current design comes close to this target, with a Bus mass of 3.35kg and a payload allowance of 1 kg. It is hoped that future work will enable the total mass to be reduced to 4.2kg. Mass is distributed in the following way:

- 34% Electrical Sub-systems
- 18% Mechanical Sub-systems
- 26% Attitude & Orbit Control / Determination
- 22% Payload Module
- Total Mass -- 4.35 kg

Two payload options have been developed, each with a target mass of 1000g. A Space Laboratory module has been designed to perform micro-gravity experiments and is currently on target for mass. The second module, designed to demonstrate aspects of autonomous Spacecraft positioning, currently exceeds its mass budget by 500g. There is some scope for mass reduction that should be investigated before the next design phase.

CUSTARD's primary solar arrays provide 21 Watts of power over half of each orbit. Normal Bus operations consume an average of 7 Watts leaving 3.5 Watts for the payload, averaged over an entire orbit. Emergency power can be supplied by secondary solar arrays distributed around the body of the satellite. If CUSTARD loses attitude control, emergency panels provide 3.5 Watts of power over half of each orbit. This is sufficient to maintain reduced Bus operations until normal power can be restored.

B.10. Duncan Maclean

The fundamental aim of the project has been to investigate and contribute to the space application of MST (Micro Systems Technology), and to develop a series of hardware demonstrators. The overall student project is intended to form an integral part of the hardware demonstration area. The study is being handled by AMSTAP, the UK Aerospace MST Applications Partnership, whose members include:

- Cranfield University
- Rutherford Appleton Laboratory
- Matra Marconi Space
- Southampton University

The project was intended to highlight areas where MST could be applied within the space industry, and specifically to develop a small satellite to act as a hardware demonstrator.
The project was organised in such that the project team was divided into distinct areas, with a team assigned to each subgroup:

- Systems - The responsibilities of the systems group were mainly overseeing the entire project and ensuring each subgroup worked towards a common goal. Co-ordination of the subgroups was a major role of the systems group.
- Missions - This subgroup was responsible for determining the type of mission for the nano-satellite. This included selection, and engineering of the payload module.
- Attitude and Orbit Control - The concept and design of the AOCS (Attitude and Orbit Control System) was the responsibility of the Attitude group, including novel methods of orbit determination.
- Mechanical - The mechanical group was responsible for the spacecraft structure, thermal issues, radiation shielding, and the launch-ejection mechanism.
- Electrical - The areas that were investigated by the electrical group were spacecraft and ground segment communications, power raising, storage and distribution, and the on-board computer system.

The project period of twenty weeks was divided into two. The first ten-week period was to enable available MST to be investigated, and to establish the type of mission for which the spacecraft could be employed. The second period was to produce a more defined design, with more specific subsystem designs. These more specific definitions were the result of work carried out in the form of Work Packages, and each member of the subgroups produced these documents.

Communication between the groups and persons within groups was essential due to the dynamic nature of the design process.

B.10.1. Initial Mission Specification

The initial specification provided to the design team was that the satellite should have:
- Mass of 4KG
- Power of 3W average and 6W peak
- 3-axis stabilisation (if possible)
- Minimum lifetime of 3 months

The initial specification was deliberately vague in order to give the design team a free hand in developing the subsystems.

B.10.2. Fuel Cells

As the project was the design of a nano-satellite that would be capable of demonstrating MST (Micro Systems Technology), it was decided that a concurrent parallel study would be carried out into alternative methods of power supply and storage.

The main disadvantages of using conventional batteries for power supply and storage are that they are both heavy and usually physically large. Ideally, the size and mass of the power supply and storage system for a nano-satellite, along with all subsystems, should be kept to a minimum. Therefore, the emerging technology of small fuel cells was investigated.

A micro-fuel cell is being developed by a company called Manhattan Scientifics Inc (MSI), and it is this technology that is of great interest. Their work is expected to culminate in the replacement of mobile telephone batteries with micro-fuel cells. However, the lack of information regarding the micro-fuel cells being produced by MSI would make any definitive decision unfeasible. It can be stated that the fact the cells are still at the prototype stage would mean that their utilisation within the next few years is out of the question. It has been established that the micro-cells that MSI are developing would only provide <1W of power. For an application such as CUSTARD, several of these cells would therefore need to be utilised. This would still provide a saving in mass and size over conventional primary or secondary batteries. To recap, the benefits of the micro-fuel cells can be clearly seen in Figure B.10.1.

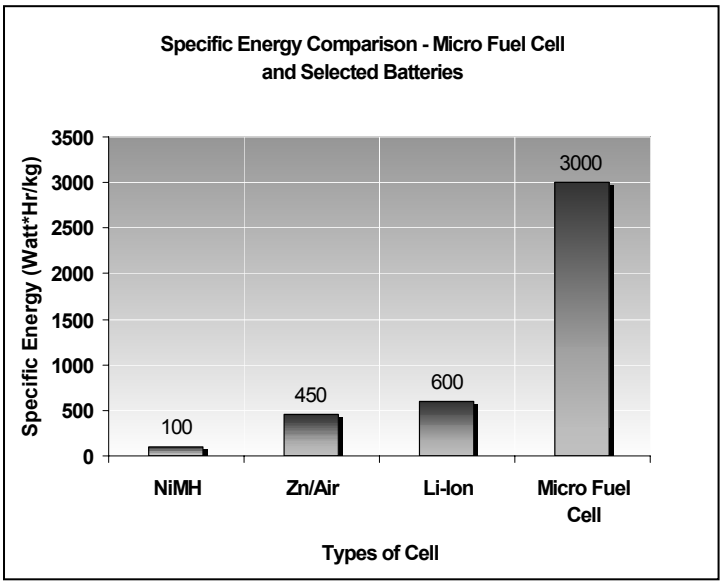

Figure B.10.1

More development is required in this area before it can seriously be considered as a contender for space applications. Nevertheless, if the technology can be perfected and can be demonstrated that it would function correctly in the space environment, it could possibly be utilised for nano-spacecraft power sources. The only major concern would be that the consumable fuel supply, in this case methanol or ethanol, would have a finite lifetime possibly shorter than the charge-discharge cycles achievable with secondary batteries.

B.10.3. Computer System

B.10.3.1. Microprocessor

It was necessary to determine the best microprocessor system for the nano-satellite. The main drivers behind the selection of a processor were restraints on size, mass, and power consumption. These constraints on the spacecraft bus were imposed in the initial mission specification, and these parameters would be critical in all subsystems in order to achieve the desired specification.

A number of microprocessor systems were evaluated that had more than adequate resources, but only one was found that would fulfil the initial specification.

The microprocessor selected for use, as the onboard computer system is the RAL processor board, designed by Mr. Nick Waltham at RAL. As has been stated, this was selected due to its specification, and that it met the mission requirements.

B.10.3.2. System Architecture

It was necessary to determine the most suitable system architecture for the onboard computer system. The payload processing requirements dictated the addition of system memory or a second dedicated payload processor. The physical size of the nano-satellite meant that if distributed processing were required, if two processors were used, a parallel connection could be made between the two. Transmission over such short distances would have made it infeasible to use serial transmission. However, it was decided that the addition of a second processor would have resulted in an unacceptable increase in mass. Therefore, the system architecture was determined by using an analytical flowchart method. By following through the flowchart, the optimal architecture was determined. A Centralised 'STAR' architecture was selected.

B.10.3.3. System Resource Allocation

It was necessary to allocate the resources of the system to ensure the chosen processor was adequate, and for this purpose, the usual design methodology was carried out 'back-to-front'. Due to no early definition of subsystem requirements, and also the constraints of the mass and power budget, the processor designed by RAL proved to be the most suitable option throughout the design process. Therefore, the estimation process was carried out to ensure this processor had the required resources.

The method used was Estimation by Similarity, whereby data were obtained from other satellite systems, adjusted accordingly, and applied to CUSTARD. The results of this process were that the RAL processor board was sufficient.

B.10.3.4. Computer System Specification

- **Architecture**

Centralised 'STAR' Architecture

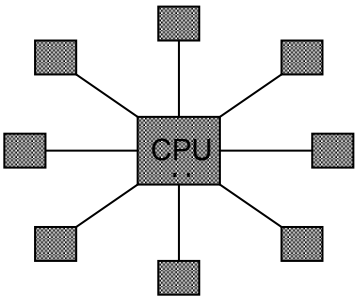

Figure B.10.2 Centralised STAR architecture

- **Microprocessor**
  - **Hardware**
    - Intersil (formerly Harris Semiconductor) RTX 2010 RH microcontroller
    - 16-bit, 8 MHz, 4 MIPS, Rad-hard, RISC architecture
    - ACTEL RH1280/RH1020 FPGA
    - Custom built Backplane with 16 bit Data Bus and 7 bit Address Bus
  - **Memory**
    - 0.5 MB RAM & Up to 4 MB High Density SRAM for payload
    - 128 KB PROM
    - 256 KB E2PROM
  - **Software**
    - Forth and/or C

B.10.4. Recommendations for Further Work

- Software

The software for the mission is required. This will undoubtedly prove to be a large and time consuming part of the overall mission. It may well prove that outside assistance be sought for this, as the software for the RAL microprocessor and the ROSETTA mission has taken 4 years to develop. Obviously this software is incorporated into a much more complex system and mission, but software design and implementation is a lengthy process. It is a vital part of modern engineering, that should be developed in a well-documented way and allow the system to perform its designated tasks. Software must also conform to industry standards. ESA have designated standards for software development, and code should also conform to ISO9000 (BS 5750 in UK).

- EMC (Electro-Magnetic Compatibility) Considerations

EMC is about the ability of different items of electrically operated equipment to work in close proximity without causing mutual interference. It also relates to the ability of equipment to operate without interfering with communication signals and to be immune to such signals. Obviously, this issue should be addressed when deciding upon the physical layout of the nano-satellite during construction. For example, the processor should be located away from the power supply and power regulation circuits.

- Physical Interfacing

The connection of the subsystem circuits to the microprocessor system is an area where further study is required. The processor board does not contain an ADC (Analogue to Digital Converter), and therefore a suitable device should be identified. This will be easier to accomplish once numbers and types of subsystem sensors have been specified.

B.11. Victoria Matthewson

The aim of the group design project for 1999/2000 was to design a 4 kg nano-satellite, which would demonstrate Microsystems technology. The nano-satellite was named CUSTARD, Cranfield University Space Technology and Research Demonstrator. The group was split into five subgroups: System, Missions, Mechanical, Electrical and Attitude and Orbit Control.

The attitude and orbit control system maintains the required attitude and orbital parameters for the spacecraft. The subgroup was diveided into work areas which were: Attitude Control System, Attitude Determination, Orbit Maintenance and De-orbit.

Within the attitude control system work area there were three work packages: Thruster System Design, Disturbance Torque Evaluation and Momentum Management. Momentum exchange devices are actuators used to control a spacecraft's attitude. They absorb and store the angular momentum of the satellite that is caused by disturbance torques. The aims of the momentum management work package were:

- To calculate the angular momentum capacity needed for the wheels.
- To use disturbance torques to size the reaction wheels.
- To research off the shelf reaction wheels and assess their suitability for CUSTARD.
- To design a basic reaction wheel assembly if no off the shelf wheels were suitable.

B.11.1. Method

Research was done into the various methods of attitude control
Passive: gravity gradient and magnetic.
Spin: single spin and dual spin.
3-axis: momentum bias, reaction thrusters control and reaction wheel 3-axis control.
In order to obtain the most versatile satellite but it was decided that 3-axis attitude control would be the most suitable.

Two initial designs of the attitude control system were made. These were:
Design A: A 3-axis momentum bias system that included a momentum wheel in the pitch axis to provide the momentum bias. Due to roll/yaw coupling a reaction wheel in either the roll or yaw axis can provide yaw/roll control. There are also eight thrusters for momentum dumping and translational motion. This design was suitable for the imaging platform and nanolab mission options.
Design B: A 3-axis control system with reaction wheels. This system had three orthogonal reaction wheels one in each of the satellite axes, and eight thrusters again for momentum dumping and for translation motion. This design was suitable for all the mission options and gave full rotational and translational motion. It was design B that was chosen for development in the second half of the project.

Research was done into the off the shelf reaction wheels available from various manufacturers. No reaction wheels were found which would be small enough for use in the design of CUSTARD. The smallest off the shelf wheels that were found had a mass of 0.3 kg each and were sized at 10.16x10.16x15.24 cm each that is a size almost as large as the satellite itself. This led to the investigation of in-house solutions for reaction wheels. The reaction wheel assembly consists of a torque motor, a flywheel, a tachometer and controlling electronics.

The motors that are commonly used in space applications are the DC brush motor, the DC brushless motor and the step motor. Of these the brush motor is not suitable to drive a reaction wheel as its lifetime is limited by the wear on the brushes. The motor that was chosen to drive

the reaction wheel is a brushless DC motor that can also be used in a stepping mode. Bearing that are used in motors (mechanical bearings) encounter problems in space, the lifetime is reduced as the bearings wear faster. A solution to this problem is the use of magnetic-bearings that do not suffer from wear and do not need lubrication like the mechanical bearings. Magnetic bearings however are not produced for satellites under 400 kg, this means that magnetic-bearings are not suitable for use on CUSTARD. However, with the correct lubrication, mechanical bearings can have lifetimes of up to 10 years, as the mission for CUATARD is set at three months, there should be no problems with using mechanical bearings in the motor.

To calculate the angular momentum that the reaction wheels would be required to store during an orbit, the total values for the torques acting on the spacecraft at four positions during the orbit were calculated. These torques were then averaged out over a quarter of an orbit and an increase for angular momentum in each quarter of the orbit was obtained. The sum of this angular momentum was then compared to the angular momentum capacity of the reaction wheels to determine how often momentum dumping should take place. The values for the change in angular momentum during the orbit are:
$\Delta h_x=-4.35\times10^{-5}$ $\Delta h_y=4.57\times10^{-5}$ $\Delta h_z=1.23\times10^{-5}$
The angular momentum capacity of the reaction wheels is 4.85×10^{-4}, which leads to the momentum dumping taking place once an orbit. This value gives a large margin for any complications that may occur during an orbit.

B.11.2. Results

The motor used to drive the wheel is a 5 mm motor from Smoovy by RMB. The wheel material is steel. The wheel is shaped like a bicycle wheel, with all the mass about the outside to increase the inertia, its attached to the rotor of the motor with spokes. Some of the properties of the wheel and the motor are given in the table below.

-	Wheel	Motor	Total
Mass g	7.41	1.4	8.81
Length mm	4	20.15	Depends on fixing
Diameter mm	10	5	10
Inertia kg m^2	4.62×10^{-7}	2.6×10^{-10}	4.63×10^{-7}
Angular Momentum capacity kg m^2 s^{-1}	-	-	4.85×10^{-4}

There are four reaction wheels, one in each axis and a fourth skewed wheel for redundancy.

B.11.3. Conclusion

The nano-satellite will be 3-axis controlled with reaction wheels. There were no off the shelf reaction wheels that were suitable for use on CUSTARD due to mass and volume restrictions. With the present attitude towards smaller cheaper spacecraft, it was through that the manufacturers would have been producing smaller wheels as off the shelf components (it is possible to obtain very small wheels but they are custom made). Some companies do make wheels suitable for mini and micro satellites, but not control electronics to go with them. The initial calculations for sizing these wheels were completed and a basic outline of the components required to complete a reaction wheel assembly was given.

Further work is required for the controlling electronics and more detailed analysis of the momentum build up is needed.

B.12. Judeth McCall

This project was initiated in October of 1999 and from conception to launch is intended to take approximately three years.

The initial aims as set out in the original specification were that a s/c was to be designed that would have

Mass	4kg max.
Power	3 Watts average 6 Watts peak
3 Axis Stabilised	

The primary aim was to design a nano-satellite that would perform all of the same functions as a much larger spacecraft but operate under much stricter constraints. These are outlined above. The definition of a nano-satellite varies depending on the source but in general it is a satellite of 10kg or less.

The other major aim was to demonstrate the use of MST in space; MST products and technology have a many attributes that make them attractive to the space industry

- Suitability for low cost, high volume production
- Reduced size, mass and power consumption
- High functionality
- Improved reliability and robustness

The group was split quite early in the project into smaller sub-groups, each responsible for different aspects of the satellite design. Originally there were four groups – Missions, Mechanical, Electrical and Payload, the final group to be constructed was Systems.

The following table provides a summary of the main aspects of the CUSTARD mission.

Mass	Approx. 4 kg
Volume	175mm x 240mm x 210mm
Inclination	98.6°
Altitude	800km
Orbit	LEO - high inclination - sun synchronous
Pointing	Sun pointing
Payload	Spacecraft Interaction Nanolab

Table 6.12.1: CUSTARD mission summary

B.12.1.Electrical Group

As stated in section 1.1 the main group was divided into five sub-groups, each with different responsibilities within the GDP. The key areas identified for research within the electrical group were

- Micro Processor
- Power – Solar Arrays & Batteries
- Communications – Onboard & Ground

Within this group structure my personal responsibilities concerned the ground communications and data handling techniques.

B.12.2.Ground Station

The options identified were

- Use of existing ground station
- Use of mobile ground stations

The factors that influenced the choice of ground communications were

- Cost
- Time
- Simplicity
- User Requirements

The advantages and disadvantages of each option is detailed in the following

	ADVANTAGES	DISADVANTAGES
Mission Specific Ground Station	Mission specific thus can meet all requirements No need for data distribution No external intervention necessary Establishment of Cranfield ground station	Cost Short time for development and production Short duration mission Limited pass access
Existing Ground Station	Funding Time available for GS development Coverage depending on number of GS Redundancy	Access limitations Not mission specific Data distribution Availability
Mobile Ground Station	Redundancy Encouraging co-operation	Development costs Distribution costs Data distribution Needs centre of operations

Table 6.12.2

B.12.3.Data Handling

The options identified were

- Multiple ground stations
- Relay satellite
- Use of established network
- GLOBALSTAR
- Store & forward

The factors that influenced the choice of data handling techniques were

- Simplicity
- Cost
- Mission driver
- Mission requirements

The advantages and disadvantages of each option are detailed in the following

Option	Advantages	Disadvantages
Multiple Ground Stations	Redundancy	Cost Availability Data distribution
Relay Satellite	Mass/Power restrictions Future applications	Cost Redundancy
Established Network	Reliability Redundancy	Cost Data distribution
GLOBALSTAR	Mission demonstrator	Mission constraints
Store & Forward	Simple Cost Mission requirements	Memory capabilities

Table 6.12.3

B.12.4.Conclusions

The ground station option selected was the use of an existing facility, the sites selected were

- RAL, Chilton, Oxfordshire, UK
- Kiruna, Sweden

Visibility of CUSTARD is detailed in the following

Facility	No. of Passes per day	Total View Time (s per day)
RAL	6	3084
Kiruna	11	5512

Table 6.12.4

The data handling technique selected was the use of store and forward. Areas highlighted for further investigation

- Launch time and location for more accurate pass information
- Establishment of contact with ground station operators
- Possibility of development of Cranfield ground station
- Onboard autonomy
- Processor memory improvements

B.13. Claire McCrorie

Recent years have demonstrated a trend towards 'smaller, faster, cheaper' spacecraft. These new generation of satellites incorporate small-scale technology to allow the mass production of smaller satellites in a shorter period of time with capabilities similar to the much more expensive larger versions. This small-scale technology, known as MST (Micro Systems Technology) is being developed around the world for many applications, and within the UK, the AMSTAP team consisting of MMS, RAL and the Universities of Cranfield and Southampton, has been examining its uses in space. The project undertaken by the MSc class at Cranfield University, is part of this study of MST and is intended to provide qualification of such technology in the space environment, in doing so supporting the UK aerospace industry in MST applications and creating a group of engineers, within the UK, familiar with the use of such technology in space.

This reasoning provides the background to the development of CUSTARD, the Cranfield University Space Technology and Research Demonstrator. CUSTARD is the result of specifications set at the beginning of the year governing its design. It was to be a nano-satellite (defined as weighing between 0 and 10kg) technology demonstrator, and should also perform a useful purpose (as set by the project team). The initial specifications were:

- Mass < 4 Kg
- Peak power = 6 W
- Average Power = 3 W
- Lifetime > 3 months

It should also be suitable for zero or very low cost launches of opportunity i.e. 'piggy-backed' onto larger paying customers on launch vehicles such as Ariane or Delta.

It was also decided that the team should aim towards a generic bus, capable of carrying any payload and that the design case be an 800km sun-synchronous (noon-midnight) orbit. Also, as much MST as possible should be incorporated in all aspects of the design, not just the payload.

The class were then split into subgroups each responsible for a different aspect of the design. These were:
- Missions – responsible for looking at various payload possibilities and available MST
- Mechanical – responsible for the structure of the satellite and any mechanisms
- Electrical – responsible for TT&C and power generation and control
- Systems – responsible for project budgets, timetables & schedules and generally bringing the whole project together
- Attitude and orbit control group – responsible for the design of the attitude and orbit control system

B.13.1.Attitude Control Group

The attitude and orbit control group were responsible for the design of a full three-axis determination and control system within a mass budget of 1 kg.

For the attitude control sub-group (Neville Fenn, Victoria Matthewson and myself), this initially involved studying the different methods of control and the actuators required to achieve it, as well as existing small satellites and their AOCS'. From this it was decided that full three-axis control was a possibility for a satellite of CUSTARD's size and would be a good MST demonstration. The actuators used were four reaction wheels and eight offset thruster nozzles, providing both translational and rotational motion, in both directions, about all three axes.

B.13.2. Torque Requirements

I then went on to study the torque requirements placed on the system once in orbit to provide an input to the sizing of the actuators that would then produce that torque.

The first of these were disturbance torques. The environmental torques found to be of significance to CUSTARD were those due to Solar radiation pressure and Aerodynamic drag. For the 800km orbit, in a constant sun-pointing orientation, SRP was found to produce a constant torque of 10^{-8} Nm about the x and y axes whenever in sunlight. This would be unchanged for any other orbit, except in terms of time spent in eclipse, as long as the sun-pointing orientation is maintained.

Aerodynamic Drag produces a cyclic torque of the order of 10^{-9} Nm about all three axes, which is very much orbit and orientation dependant.

Other disturbance torques, both external and internal, were found to be negligible.

The wheels could therefore be sized with a minimum torque capacity of 10^{-8} Nm.

Larger torque requirements arise from sources such as attitude capture and manoeuvring. At release form the launch vehicle CUSTARD will be spinning with an angular velocity of 1 deg/sec about the z-axis. The attitude control system must then be able to stabilise the satellite and the torque required to do so was found to be $8.\times10^{-7}$ Nm.

In addition, any mission will set a number of attitude slew manoeuvres to be performed. In order to provide a reasonable level of manoeuvrability, it was found that torque levels of10^{-4} Nm were required about each of CUSTARD's axes.

The thrusters could then be sized to provide these higher levels of torque – 10^{-4} Nm minimum capacity, as well as to perform momentum dumping when required.

The figures therefore provided the required input to the design of the thruster and reaction wheel systems by Neville and Victoria.

B.14. Simone Mengozzi

The aim of the work carried out was to design the main structure of the “Custard” nano satellite.

The main task of the satellite was to demonstrate the possibility of using MST technology for space applications, in order to reduce the size and weight of the future satellites. At the same time, the idea was also to make of “Custard” a multi-mission, versatile nano bus for a wide range of small payloads.

Both objectives will reduce the cost of future space missions:

- MST technology - Reducing weight and size of the satellite, will effectively scale down the mass lifted into orbit by the launcher and thus its cost.
- Multi-mission bus - It will not be necessary to design a new bus for any new mission, and this will permit the customer to save time and money in the design phase of the mission.

The whole design could be seen as two different sub-designs, linked to each other. One design is concerned with the satellite bus, which must have high versatility in terms of mission possibilities. The other design is concerned with the payload of the bus that has to perform the mission and demonstrate the possibility of using MST technologies.

B.14.1. Structure design

The design process was divided into two phases:

- Phase-1 Preliminary sizing.
  In this phase the structure shape and the load paths were chosen. A preliminary material selection was performed. Hand calculations of the stress distribution were carried out in order to estimate the dimension of the structure’s components. The hand calculations were uploaded into a MathCad file in order to be able to update the results and structure characteristics quickly when another sub-group made any changes.
- Phase-2 Modal and static analysis by FE software and optimisation.
  In the second phase the structure with the dimensions of phase-1 was modelled by Patran software to run finite element simulations. The FE software used was Nastran. More details were available at that stage and were implemented in the structural model. Some design constraints of the first phase were changed and new ones were added to increase the design accuracy.

B.14.2. Structure design phase-1

B.14.2.1. Phase-1 design constraints

At the beginning of the project few general constraints were determined. The relevant constraints for the structural preliminary design were taken as main drivers:

- Structural mass less than 20% of the total satellite mass. Of which 63% allocated to the main structure, 25% to the mechanisms and launcher interface and 12% allocated to the thermal control.
- Structure must allow high mission versatility.
- The structure must withstand the launch loads, and guarantee enough stiffness to avoid coupling between its natural modes and the launcher main frequencies.
- Generic launch loads were considered: vertical load of $\pm$ 6 g, lateral load of $\pm$ 3 g and a safety factor of 2.
- Structural parts must be easy to manufacture.

B.14.2.2. Structural shape and loads paths

At the beginning of the design the main structural shape was chosen to be cubic. The main reason was the high mission versatility of the cube, in terms of payload fitting, attitude control and solar cell mounting. Some advantages of the cube structure are listed below:

- Could easily be spin or three axes stabilised.
- Volume efficient for instrument mounting.
- Simple structural components.

To maximise the stiffness to weight ratio an open structure was designed. The mounting surfaces were chosen to be to honeycomb plates mounted at the top and bottom of the structure. To stiffen the panels a metallic frame was mounted all around them. The sides of the structure were left open. Triangulated frames and vertical beams were used to support the plates and stiffen the structure, fig. B.14.1.

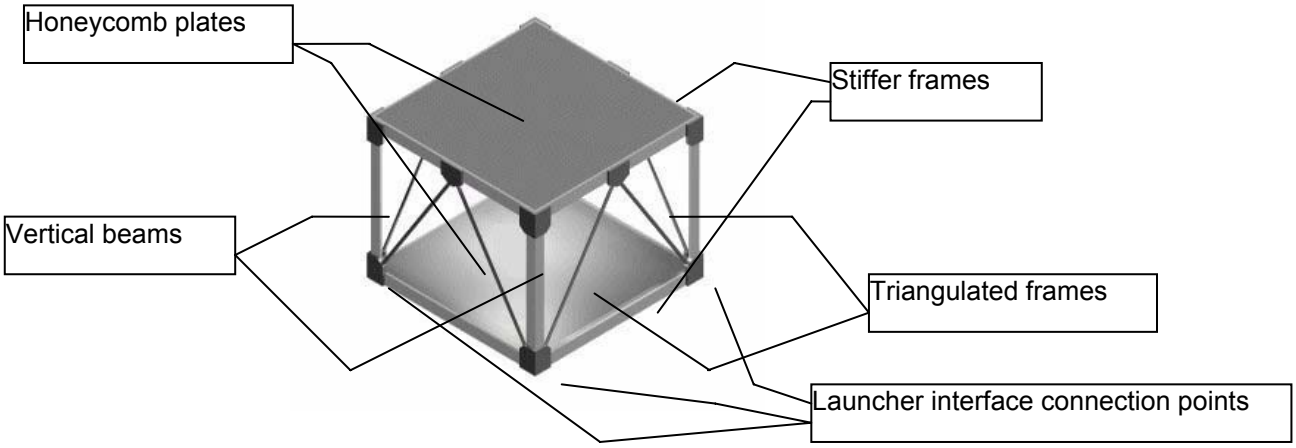

Figure B.14.1: Satellite main structure outline.

The vertical load during the launch phase will be transferred from the honeycomb panel to the frame. From the frame trough the vertical beams and triangulated frames to the connection point with the launcher interface and the launcher main structure, fig. B.14.2 (a). The lateral loads during the launch generate shear and bending forces. The triangulated frames working in tension and compression will withstand the shear stress. The bending will be transferred to the vertical beams as axial forces, fig. B.14.2 (b).

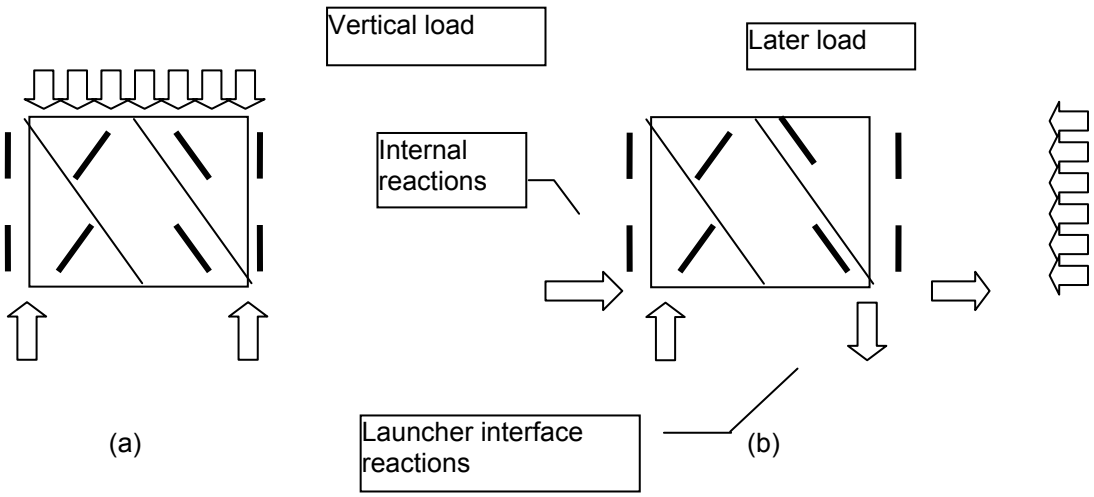

Figure B.14.2: Load path in the satellite main structure.

B.14.2.3. Hand calculation and results

To perform the hand calculation some assumptions and simplifications were made:

- No triangulated frames on the sides were considered.
- Only an initial vertical load of 6 g was applied during the hand calculation.
- A safety factor of 2 was used.

The triangulated frames were not considered during the calculations, to allow the structure to be treated as simply supported and not as overstrained one, fig B.14.3.

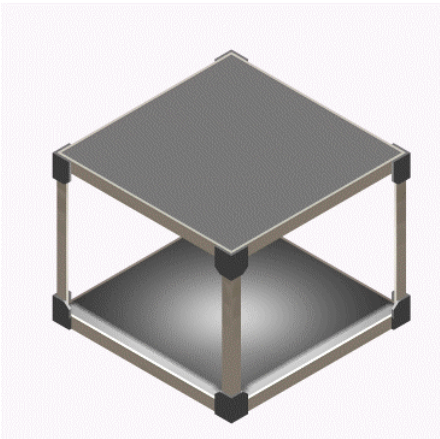

Figure B.14.3: Structure configuration used for the hand calculation.

A base dimension for the triangulated frames was chosen to start the FE analysis. The idea was to use the triangulated frames for two tasks. They provided stiffness to the main structure, as well as providing internal housing for fuel pipes, which were part of the attitude control system [7]. Combining these two tasks resulted in a mass saving for both, the structure and the ATC systems. The dimensions of the pipes were chosen in such a way, so as to guarantee enough fuel could pass trough them to enable the AOCS to work correctly. Off the shelf pipes were used in the design, so as to avoid any manufacturing problem.

B.14.3. Structure design phase-2

The dimensions used were mainly the ones calculated in the first phase of the design. More constraints were used during the design at this stage. Some dimensions were changed before running any simulation to accommodate all the new constraints.

B.14.3.1. Phase-2 design constraints

At this stage of the design, more details were becoming available from each sub-group involved in the project. The on board equipment was almost completely defined. The instrumentation constraints were incorporated to the ones used in the preliminary dimensioning, so as to increase the accuracy of the design. The main launcher option was also defined. The loads used for the FE simulation were the ones concerning the ASAP ring mounted on Ariane 5.

The new constraints could be divided according to which sub-group they affected.
Mission group:

- The payload of the satellite, which will perform the mission, must be mounted on the bottom of the satellite [8].
- One side of the payload volume must be at least 185 mm, due to the minimum focal length requirement of the CCD camera [8].

Attitude and control group:

- The fuel tank must be as close as possible to the satellite's centre of mass, because it is the only part of the equipment whose mass changes during the lifetime of the mission

- The thrusters must be mounted at each corner of the structure [7].
- The reaction wheels must be aligned with the principal axis, or lie in the same planes. One backup reaction wheel must be aligned with an axis inclined at 45° from the three principal axes, fig. 2.3.1 [9].
- The magnetometer must be mounted as far as possible from any source of electromagnetic contamination [10].
- The sun sensor must mounted on the top plate, which will be orientated towards the sun [10].

Electrical group:

- The computer board must be mounted as far as possible from any source of electromagnetic contamination [11].

The launcher constrain:

- Vertical acceleration ± 11 g.
- Lateral acceleration ± 6 g.
- First lateral mode frequency> of 50 Hz.
- First longitudinal mode frequency> of 100 Hz.
- Safety factor 1.5.

B.14.3.2. FE analysis

Only the structure of the satellite was meshed. The equipment was not meshed, because it was not necessary to simulate the structural response. Point mass elements were positioned at each instrument corner to take into account the weight of the equipment in the model, without having to mesh it, fig. B.14.4. The values of the lumped mass elements were a fraction of the total equipment mass. For each part of the equipment the sum of the mass elements at each corner was equal to its total mass.

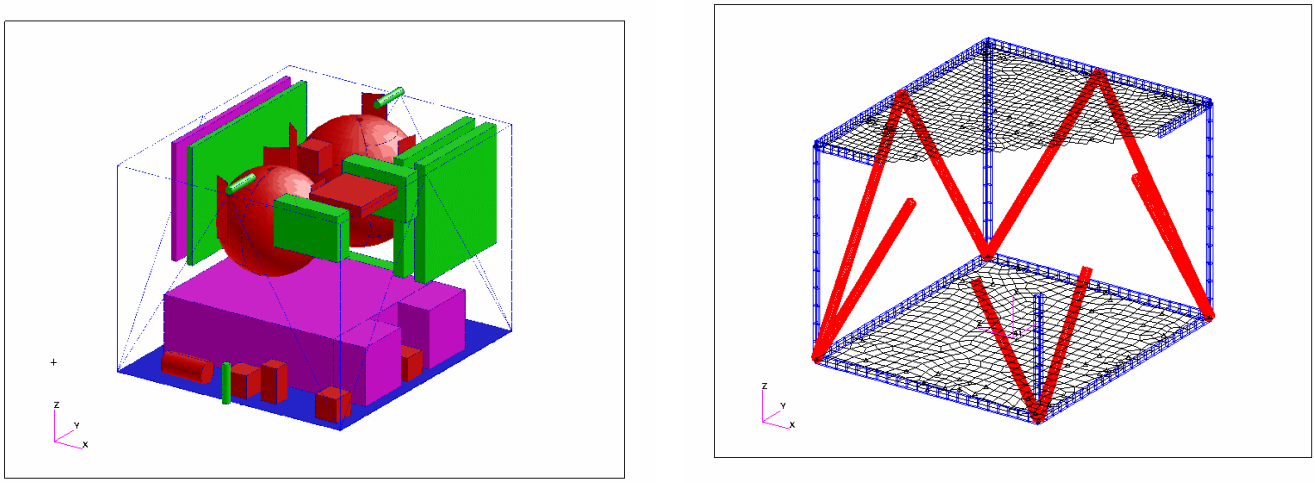

Figure B.14.4: Equipment mounting configuration and model mesh used for FE simulations.

B.14.4. Results

The final structure satisfied all the requirements. The launcher validation requirement were matched:

- First lateral mode 74.8 Hz.
- First longitudinal mode 163 Hz.
- Maximum displacement [0.0398, 0.253, -0.154] mm, [x, y, z].
- The structure was capable to react the static loads imposed by the ASAP ring manual.
- Structural mass ~ 12.6 % of the total, about 506 g.

B.14.5. Conclusion

The structure designed satisfied all the constraints, but further work is necessary to complete the design. An accurate buckling analysis of the vertical beams and triangulated frames under the combined lateral and vertical loads is necessary to validate the design. Spectral and dynamic analysis of the structure under the launcher random loads is necessary to increase the accuracy of the stress distribution during the launch phase. The design of the secondary structure, used to mount the equipment, must be undertaken.

B.15. Paul Middleton

This report forms part of a wider study as an element of the group design project in the Cranfield University MSc in Astronautics and Space Engineering. The work complements a larger project undertaken by the UK Aerospace MST Applications Partnership (AMSTAP).

The overall aim of the AMSTAP project is to contribute to the development and demonstration of Microsystems Technology (MST) applications within the space arena. In order to provide a means to make such a demonstration, the current group design project was established with the aim of designing a nano-satellite.

A number of initial constraints were imposed, a mass limit of 4 kg, peak and average power limits of 6 Watts and 3 Watts respectively, a lifetime of 3 months. The only mission criteria as that the nano-satellite should demonstrate MST. Orbit insertion was to be achieved by means of a “piggy-back” ride.

This report deals with elements of the systems side of the project, a prime concern of which was project co-ordination. Specific areas covered are mission selection, decision documentation, systems architecture, and satellite operations.

Mission selection refers to the process by which the initial mission concepts were narrowed down to select appropriate ideas for further study. The aim or output of which is the recommendation of which mission(s) should be selected for the technology demonstration.

The documentation work package was established to detail the decisions that were taken by the systems group whilst attempting to ensure that the project achieved its aims. A secondary outcome was the definition of the spacecraft requirements. This element is aimed at providing a reference document for future studies.

Systems architecture deals with the integration of the nano-satellite systems, ensuring the compatibility of the different sub systems in terms of operation and flow of information.

Operations entails the development of a timetable for the lifetime of the nano-satellite, identifying the sequence of events or operations of the onboard systems and how they link together.

B.15.1.Mission selection

At the start of the project the group as a whole looked at a variety of mission concepts that could be utilised to demonstrate MST applications in space. Of which four missions were selected as having potential for the current project, and were investigated in more depth. To provide more focus for the second, more detailed phase of design work the four missions were narrowed down to two. Whilst improving the focus, this still retained an element of flexibility. The process selection of these two missions is described.

The four missions under investigation were a “nano-space lab”, an imaging platform, a debris detection system and a spacecraft interaction mission.

One of the methods used in the selection procedure was a “trade-off matrix”, designed to aid in determining the relative merits of the different missions. A number scoring criteria were applied to the different missions, the resulting marks of the four missions being: nanolab 196, imaging platform 177, spacecraft interaction 173, and debris detection 140.

Following the completion of the scoring a series of discussions were held, looking at both the results of the trade-off matrix and at the general options available to take the project forward, resulting in the selection of the nanolab and spacecraft interaction missions.

The nanolab was seen as having excellent potential for MST demonstration, this coupled with the relatively simple and versatile design made for an attractive choice.

The spacecraft interaction mission was chosen as it was seen as being more attractive to investors and was aimed at the demonstration of new technology that could lead to significant benefits to the space industry.

B.15.2.Documentation

Documentation covers the major decisions taken during the course of the project by the systems group in order to ensure that the mission objectives were met. This section will be especially useful when identifying how the current baseline design was developed.

Three-axis stabilisation wasn't specified as an initial requirement on the project, however, it soon became apparent that this was a highly desirable trait, and was therefore added to the constraints. This allowed for a more versatile satellite with increased mission capability. It is also more relevant for future applications of nanosatellites.

The general concept of a satellite bus and payload module was adopted to retain flexibility within the design, and allow the incorporation of either mission. The systems group requested that wherever possible the onboard systems of the spacecraft bus should be kept as modular as possible. This concept would also lend itself to the development of a series of flights with different payloads. The modular design would also allow for individual systems within the nanosatellite to be substituted for MST devices should they become available at a later date.

After initially narrowing the choice of orbits to geostationary transfer orbit (GTO) and polar low Earth orbit (LEO), to accelerate the development process, a final orbit was selected thereby reducing the number of variables.

The chosen orbit was a noon-midnight, polar, sun synchronous (inclination of 98.6°) orbit at an altitude of 800 km. The period was 100.87 minutes, (35.13 minutes of which are in eclipse) giving 14.24 orbits per day. The LEO was selected for a number of reasons. Primarily, it was most suitable for the two missions being studied, and also for potential future applications. It was also beneficial as it provides the simplest solution for communication, thermal protection and radiation shielding.

In another attempt to speed up the work and finish the preliminary design, the systems group took the step of specifying the attitude of the nano-satellite as a sun pointing orientation. The principle reason for this choice was for ease of solution, allowing quick resolution of many of the problems, maximising power raising, and giving the simplest model of power and thermal levels throughout the orbit.

From a combination of the initial constraints, the above decisions and the preliminary findings of the different sub groups a set of spacecraft requirements were devised.

- Mass should ideally not exceed 4 kg. (If it can be shown that the performance of the spacecraft could be significantly improved with a small increase, exceptions could be made to this limit.)
- The minimum power requirements should be limited to that amount that can be generated from body mounted solar arrays.
- The minimum lifetime should be three months.
- Orbit insertion should be achieved by means of a "piggy-back" launch.
- Operating orbit should be a noon-midnight polar sun synchronous orbit of altitude 800 km.
- Three-axis stabilisation should be demonstrated.
- Satellite should be flown in an inertially fixed, sun-pointing attitude.

- Reliability of critical systems should be sufficient to allow the application of MST to be demonstrated.
- A modular concept should be employed when possible with a view towards future developments of the spacecraft.
- As a technology demonstrator for Shape Memory Alloys (SMA's) deployable solar arrays should be demonstrated. However, no critical functionality of the spacecraft should rely on the power generated from them.
- Whilst on the launch vehicle to avoid interference with major satellite, the nano-satellite should be "dead" with no systems active.
- If possible, the nano-satellite should be capable of de-orbiting from its operational orbit.

B.15.3.Systems architecture

A variety of outputs result from the work on systems integration. System architecture diagrams, data flow tables and system functionality maps are constructed for the major sub systems, attitude and orbit control (AOCS), electrical, mechanical and payload. The processes involved in their development are described in detail.

B.15.4.Operations

The results of the study into satellite operations are fully detailed within the report. Mission plans and timelines for the different segments of flight have been constructed, which amongst other things, show the order of events involved in the different operations of the nano-satellite and their chronological dependencies.

B.15.5.Conclusions

The main points to take from this report are the justifications behind the choice of missions, and the reasoning behind the decisions taken by the systems group in trying to achieve the aims of the project.

A significant amount of work has been undertaken in the areas of systems architecture and operations. As the project continues, the findings can be used and updated to develop a fully integrated nano-satellite and an accompanying mission operations plan detailing the different processes of the operational life.

B.16. Laura Mullin

B.16.1.A Study of Methods of Orbit Determination for a Nano-satellite

This report forms part of the group design project conducted as part of the MSc in Astronautics and Space Engineering for the academic year 1999-2000. A description of that project and the contributions of this report follow.

Initial mission statement for the project:

> To conduct the preliminary design of a 4 kg nano-satellite, which will demonstrate MST (Micro Systems Technology)

This group design project forms the first year in a three-year project to design a nano-satellite that demonstrates MST.

In order to achieve the task stated above, the group was divided into five sub groups. These were:

Mission – the responsibilities of the group were to research and recommend payload technologies suitable for the nano-satellite.

Electrical – the responsibilities included power raising, and management, the microprocessor and interfacing and communication with the ground station.

Mechanical – responsible for the structural design, and temperature regulation on the nano-satellite, radiation and debris protection.

Attitude and Orbit Control – responsibilities included attitude determination and the sensors used, orbit determination, orbit control and maintenance.

Systems – responsible for the overall coordination of the design, and mass, power and volume budgets.

B.16.1.1.AOCS Group

This report forms part of the work done by the Attitude and Orbit Control Group. The Attitude and Orbit Control group conducted research along the following topic areas:

Actuators – this included the study of momentum wheels, reaction wheels, magnetorquers and motors as methods of control of rotational movements on the spacecraft.

Cold Gas Thrusters – studied as a method of providing translational motion on the satellite.

Sensors – for both attitude and orbit determination

De-orbit - methods of actively de-orbiting the satellite were studied, to comply with new regulations requiring that spacecraft have such a capability.

B.16.2.Conclusions

B.16.2.1.Design Recommendations of This Group Design Study

It was the conclusion of the group study to design a generic bus, which would be adaptable to several different missions. The main spacecraft systems do not incorporate MST, as such untested technology will reduce the reliability of the satellite and limit its launch opportunities. Instead, the preliminary design of a capable and versatile bus is presented, with the intention that MST is demonstrated in the payloads. The mission subgroup presents some options for these payloads, but the intention is the bus design will be adaptable to other missions.

B.16.2.2.Design Recommendations of the Attitude and Orbit Control Subgroup

The design presented gives the spacecraft full 3-axis control. Reaction wheels or motors can be used for control of the rotational motion; cold gas thrusters are incorporated to provide control of translational motion. Attitude sensors include a gyroscope, sun-sensor and magnetometer. Orbit determination methods are presented in this report.

B.16.2.3.Design Recommendations of this report

It is concluded that a GPS receiver should be incorporated into the design, to give accurate on board orbit determination. This will give the bus the greatest versatility, and high performance. In order to achieve this it is recommended that an OEM board receiver is used and integrated with the microprocessor on board. Then the satellite can be given semi autonomy if required, as the satellite can do orbit determination.

B.16.2.4.Further Work to Be Done

This report does not look in detail into the integration of an OEM receiver into the system design, this will need to be studied further. Also, an alternative, fully autonomous method of orbit determination has been studied, which uses the attitude sensors on board. This method could be looked into further, either for use on the satellite, or as the subject of a demonstration mission.

B.17. Jose Nobrega de Sousa

This research was proposed by the AMST AP as part of their program to assure the UK competitiveness in terms of the use of MST for space applications. The UK through its' aerospace institutions, research groups and Universities is carrying a research aiming to define applications for MST in space systems and prove its' operationality.

Cranfield University College of Aeronautics as part of a leading research facility is carrying some research is this area. CUSTARD -Cranfield University Space Technology Advanced Research Demonstrator, is the name of this project, it is a nano-satellite design to met the requirements of maximum use of MST in its "systems", therefore, because MST is not a proven space technology this satellite is a technology demonstrator.

Surrey Satellites Technology Limited has shown through its' experience that the use of off the shelf commercial electronics (COTS) is space is viable. In order to reduce cost the major part of the electronic components in use in the systems will be considered COTS, what implies that the selection criteria for space environment interactions qualification must take into account these restrictions.

The space environment imposes a lot of restrictions at the level of the systems and mission analysis. Without a proper analysis a space system or experiment can become enviable, non-functional or even destroyed. The selection criteria for the space systems it is becoming more demanding as the dimensions of the electronics become smaller, therefore reducing the critical charge.

The Spacecraft environment interaction can be divided into four fields, neutral gas interactions (contamination), meteoroids and space debris, space radiation and plasmas. As each of these subjects, by itself, is a very wide field special attention was given to the space radiation interactions. Space radiation interactions put a lot of demands at the orbit/mission and systems level. The restrictions imposed by the other subjects are mainly at the manufacturing and systems integration levels.

For the radiation interactions the objectives are to quantify all the important interactions factors, such as TID, NIEL, SEUs rates in order to identify the most suitable procedure to mitigate the involved hazards. All the decision chain has in mind the qualification of COTS for the aimed mission.

From the proposed orbits, GTO and Noon-Midnight Sun Synchronous orbit, only the second one passes all the selection criteria, therefore it will be the adopted one. For this no extra mass is need for shielding against radiation. The assumed mission lifetime was of 3 months.

The spacecraft configuration, at this point, supposes a bus entirely made of proved technology in order to reduce the criticality of the mission and a zone where the payload (MST) will be attached. This kind of architecture allows for a multipurpose bus.

Two missions are being considered, spacecraft interaction and nanospacelab.

Further work needs to be done in order to define the requirements imposed in the space systems and in the manufacturing process by the other environmental factors.

B.18. Francesco Piaz

As the applications for space becomes more and more varied, there is an equally growing need to ensure that these uses will be accessible to all parties interested. Perhaps the single most important factor to achieve this lies in the reduction of the costs involved. This problem can be tackled in two different directions: the first is to reduce flight expenses, which has been a fleeting illusion for the entire aerospace community involved in this area. Alternatively, the tasks carried out by a satellite can be optimised with respect to its mass, which allows the use of smaller, more economical launchers (or multiple launches with more conventional rockets) without sacrificing the satellites performance in orbit. Furthermore, the satellite design can be standardised to provide a single satellite bus capable of performing a number of different missions. This is the trend one can currently observe in satellite design, although the small amount of time for which this has been under way signifies that much is yet to be demonstrated in practical circumstances.

Producing a small satellite does not signify simply re-creating a conventionally designed satellite with a reduced size. In the case controlling the satellites pointing or positioning, the reduction in size is in fact so drastic that previously widespread actuators may not be as suitable as they used to be. Conversely, this also implies that there is the possibility to also implement novel design solutions that have rarely, if ever, been attempted before.

Considering that space flight is never going to be a cheap business, solutions for the future will have to satisfy three principal demands: reliability, simplicity and effectiveness. All of these should also be compressed in the lowest possible mass and volume whilst not causing an astronomical increase in the costs involved.

One of the satellite subsystems subject to these requirements is the attitude control system, of crucial importance to all but the simplest of missions. There are three main tasks carried out by this part of the satellite, mainly attitude and position sensing and controlling. The third task, not typically considered as an integral part of a satellite but will eventually become so in the future, involves the active de-orbiting capability of the craft. The latter of these is clearly distinct from the previous two, for which the solutions available are numerous and varied.

Amongst the possibilities for attitude control is the use of magnetic torquing. Very much based on the same principal underlying a compass, the idea is to make use of the earth's magnetic field to create the necessary torques for modifying the satellite's pointing. These actuators provide a lightweight, compact and economical mean of applying control torques of variable magnitude. The absence of consumables together with the lack of moving parts imply that the systems functioning has a practically infinite lifespan. Furthermore, the reliability of such actuators is about as high as it can realistically be on any man-made component, whilst should redundancy be required, this can be achieved at the lowest possible mass and bulk penalties.

The importance of the controlling force, and hence of the angular velocity imparted to the satellite, is dependant on the magnitude of both the local geomagnetic field value and the artificial dipole moment about the specific axis. The latter of these depends on the physical characteristics of the magnetised element as well as the current flowing through. Knowing how and when to alter the current is the key to a successful active attitude control system.

Appropriate artificial dipole variation is in fact the task that is expected of the on-board control law. The daunting aspect of this is the significant and irregular variations in the earth's magnetic field. Whilst approximately behaving like a dipole magnet shaped like a sphere, there are distortions and perturbations within this model that render it useless for all but reference purposes. The distortions in this field can be appreciated from any figure representing the earth's magnetic field. A homogeneous dipole model would consist in evenly spaced out iso-Tesla lines, which are not observed on these representations. Greater irregularities occur at higher latitudes, where the magnetic field is also at its strongest, whilst the weakest regions are

found at the equator, where the field is also most regular. Thus the irony arises that where it is most advantageous to make use of the magnetic field is also where it is most difficult. To further complicate matters, there are also inexplicable local anomalies around the globe, of which the most well known and documented is the 'Brazilian Anomaly'.

Disturbance forces to the geomagnetic field are classified into two broad categories: secular and periodic variations. The first of these is somewhat less important, manifesting itself under the form of a westward drift of the southern pole (found in the Northern Hemisphere) of approximately 0.014°/year. The overall strength is also decreasing by 0.05% per year. Periodic variations, on the other hand, are far greater in both magnitude and frequency, and above all are unpredictable. These originate mainly from disturbances caused by solar flares, and at auroral latitudes (about 67° North or South) they can cause disturbances of a few thousand nano-Teslas.

For the purpose of a successful attitude control system, it is thus essential to have either a reliable mathematical model or an on-board magnetometer for accurate readings, although having both would be optimal for control law purposes. Consideration must also be given to other, practical issues. These range from preventing problems related to magnetic interference, electronic hardware with an appropriate interface and also an effective mounting of the magnetic torquers. The last of these perhaps comes as the greatest surprise, but cross-coupling effects imply that a close assembly of magnetorquers would not result in effective control.

Once the assessment of their performance can be made, it can then be decided whether or not these actuators are in practice suitable for application on board the satellite being considered. In this case, unlike in most other engineering situations, the success of the project went beyond the success of the particular mission. Needing to demonstrate the viability and versatility of the final design implied that mission requirements were the strict minimum to satisfy, but granting added capacity was not superficial. Even the mission requirements alone, however, were quite distinct between them. The final satellite was in fact supposed to fulfil both the purposes of a nano-lab and that of interacting with a larger spacecraft (for this specific case, the mother ship would be the third stage of the launcher).

Of these, the one with the lower pointing requirements was without doubt the nano-lab mission. Providing there was sufficient control to not disturb the on-going experiment, as well as to periodically contact with the ground station, such an attitude control system would be suitable for the purpose. Mission interaction, on the other hand, posed somewhat more problems especially because it required the satellite to possess six degrees of freedom, but also because the accuracy was of greater importance. Whilst the latter of these two aspects may have been of secondary importance for this specific mission (the target was to demonstrate the principal rather than the full potential of such an application) there was no simple solution for supplying translational as well as rotational capability about all three axis.

Thus the satellites pointing requirements could only be partly satisfied by magnetorquers alone. The addition of a secondary actuator system did not originate from accuracy targets, but rather from the need to create one unique design which satisfied both purposes, hence the worst-case scenario. Clearly, the only effective mean of supplying translational capability is through the use of thrusters, which automatically included these in the final design. The secondary actuator system was thus the real open question, with the major alternative to magnetic torquers being momentum storage devices.

There are two main qualities that reaction and momentum wheels can boast over magnetic torquers: their accuracy potential and their independence form any other force. The former of these was less important to the strict requirements of either mission, but would nevertheless add to the accolades of the final product as a technology demonstrator. An attitude control actuator with a constant torquing capability throughout its orbit did, however, seem a significant advantage over magnetic torquers, whose torquing capability relies inherently on their current position in space. This is particularly true for the satisfaction of the spacecraft interaction

mission requirements, where one can easily appreciate the desirability of a consistent performance. This argument is strengthened by the orbit choice this mission is to be carried out in. Polar orbits in fact undergo the most dramatic fluctuations in surrounding geomagnetic field values, rendering the torquing capabilities equally variable.

Finally, the choice of an attitude control system with respect to the initial project aim was also considered. Strictly speaking, for the purposes of versatility the differences between magnetic and momentum devices somewhat balanced each other out. Whilst momentum devices ultimately provide a higher degree of versatility, they also allow a greater level of manoeuvrability and accuracy than is often need on a satellite in low-earth orbit (e.g. for communication or earth-observation purposes), which leaves their added cost, complexity and weight unjustified. Furthermore, these are never going to be an independent system, always counting on a secondary actuator to dissipate their stored momentum.

Besides the increased simplicity of the control law, there are other advantages to choosing this solution. Amongst them is the possibility of using these actuators at any altitude without degrading performance, and thus also their use for inter-planetary missions. Furthermore, with such an attitude control system, a few refinements of its design (rather than a drastic change in the whole thing) suffice for obtaining the highest of pointing accuracies. Whilst this may not be necessary for the bulk of future nano-satellite missions, scientific applications aimed at observing celestial bodies many light years away will, more probably than not, adopt a design along these lines. Finally, in relevance to innovative design, it is also worth noting that no documentation concerning such a small satellite with this combination of actuators was ever found, whilst there is at least one case of a similar satellite making use of three-axis magnetic attitude control.

B.19. Hannah Piper

The aim of the 1999/2000 Group Design Project for MSc. Astronautics and Space Engineering was to design a nano-satellite that would demonstrate Micro-Systems Technology. The satellite would have a mass of approximately 4 kg and would be designed as a generic bus that a payload module could be attached to.

MST is defined as '..an intelligent miniaturised system comprising sensing, processing and/or actuating functions.' This definition can also be stretched to include micro-optics and ICs.

For the purposes of the project the group was split into five subgroups: Systems, Electrical, AOCS, Mechanical and Missions. Each subgroup was responsible for a different aspect of the spacecraft.

The Missions group was responsible for selecting a variety of missions that could be used to demonstrate MST and performing a feasibility study to finally produce two missions. When the two final missions had been selected, the Missions group was responsible for designing and analysing the payloads.

My personal work was to perform a feasibility study on the original imaging platform mission and to then be responsible for the instrumentation for the two missions.

B.19.1.Imaging

It was proposed that the satellite could be used as a platform for imaging e.g. Earth observation, radiation and the aurorae or astronomy. The radiation and Aurorae mission would rely on a polar orbit that the satellite is not guaranteed to get. The other applications would probably make use of imaging chips such as CCDs. It was decided that the imaging platform mission would not provide a good opportunity to use MST.

B.19.2.Instrumentation

B.19.2.1.Missions

The two missions that came out of the initial feasibility study were the nanolab and spacecraft interaction.

The nanolab would be used for performing a variety of micro-gravity experiments; biological or chemical, or for space certification of hardware. A suggested experiment was to study thermocapillary flow in a liquid suspension. The resulting convection currents would be recorded visually.

The instrument types that were thought suitable for this experiment in the nanolab were an imaging chip, either CCD or APS and sensors to monitor the physical parameters of the experiment (temperature, pressure and acceleration).

The spacecraft interaction mission involved performing two manoeuvres around another orbital mass. The manoeuvres would be a simple plane change and a co-planar orbit transfer. In both cases the satellite would image and then take the range to the target and perform the manoeuvre which would be <1 km.

The instrument types for the interaction mission would be an imaging chip, CCD or APS and a laser ranger.

B.19.2.2.Method

The search for instruments was performed using Internet search engines, looking for specific instrument types and also under general categories such as 'MST'.

The instruments were required to have specifications that fell within certain pre-defined boundaries:

- Low power: <1 W ideally, but greater for CCDs and laser rangers which are power intensive.
- Low mass: the whole payload should be less than 1 kg.
- All instruments should ideally run off a 5 V supply.
- All instruments should ideally operate within acceptable parameters in the temperature range -50°C to +50°C.

B.19.2.3.Results

The selected instruments are shown in table B.19.1.

Device	Mass/kg	Power/W	Dimensions/mm
CCD without optics	0.08	2	31×29×62.5
APS without optics	0.03	0.001	20×20×20
LRF	0.383	6	57×127×121
Temperature	~0.005	0.005	5×6×2
Pressure	~0.005	0.001	30×30×30
Acceleration	0.002	0.013	10.5×10.6×4.3

Table B.19.1: Summary of instrument specifications.

B.19.2.4.Discussion and Conclusions

To decide between using a CCD or APS is a trade off between safety and reliability and technology demonstration. A CCD may be better for the suggested experiment in the nanolab because it is the only way of gaining results. If the imager fails then the experiment and possibly the whole mission fails. The CCD has a record of reliability in space that APS does not. In the spacecraft interaction mission, however, measurements can still be taken with the ranger if the imager fails. Another reason for using an APS chip in this mission is the major reduction in power compared to a CCD. This would free up more power for the laser ranger.

The nanolab could provide a good opportunity to use MST in the experiments and the monitoring sensors. The spacecraft interaction mission has less of a scope for MST, but the APS camera could be used as a technical demonstrator.

Further work could include investigating the optics for the imaging systems, including possibly looking at micro-optics for a steerable beam laser ranger.

B.20. Ben Sapwell

The work detailed in the full report is divided into a series of sections. These sections are intended to take the reader through the different phases of work that were carried out by the author for the 1999 ASE Group Design Project.

B.20.1.Mission types

Early work evaluated a number of different missions. The NanoSpaceLab mission was selected for further development. Further research highlighted it's potential as a possible payload for the Custard spacecraft:

The NanoSpaceLab could be used to perform experiments in space or carry technology for space certification.

Some of the most suitable experiments for the NanoSpaceLab could be those performing Microgravity science. The following areas of research in microgravity science would be most easily accommodated:

- Study of Marangoni convection
- Capillarity
- Fluid interfaces
- Biotechnology

These experiments would provide opportunities to demonstrate the following MST devices: Accelerometers, APS camera, thermocouples, nano-tubes, micro pressure sensors, micro-motors, micro chemical sensors, micro-valves and actuators.

The capacity for MST demonstration and the simplicity of the NanoSpaceLab made it one of the most attractive missions; it was chosen to take it to the detailed design phase:

B.20.2.Nanolab research

After evaluation of possible experiments, thermocapillary flow stood out as the area that would be most suited for research using a nanolab. Some of the factors that made it the most attractive area were:

- Research relevance
- Nanolab suitability
- Available literature
- Low cost
- MST demonstration

Thermocapillary flow is a phenomenon observed in fluids whose surface tension is a function of temperature. As part of the fluid is heated, its surface tension drops, causing it to be pulled towards areas with higher surface tension (colder areas). This process establishes convection currents in the fluid, hence the name - thermocapillary flow. It is difficult to study the effect on Earth, as gravitational convection is usually dominant. A basic experiment could consist of a heat source, fluid mixture, accelerometers, temperature sensors and a small camera. NASDA and Italian researchers have both conducted this type of research using sounding rockets.

In meeting the principal aims of the Custard mission, technology demonstration has been built into many areas of the nanolab payload. The payload is the ideal place to demonstrate new technology as a failure would not jeopardise the operation of the entire spacecraft. Several areas have been identified that could demonstrate new technology.

- Modular concept

- MST devices
- RAL microprocessor
- Active pixel sensors
- Doria data compression technique developed by ESA.

B.20.3.NanoSpaceLab experiment design

A general view of the designed experiment is given below. The diagram shows a CCD camera viewing a transparent cube mounted on a plate. On top of the cube is a thin film heater. The plate on which the cube sits acts as a heat sink. Two LED's can be seen on each side of the cell projecting a beam of light onto it. Each wall of the cell that is illuminated is masked to prevent most light from entering. A small slit in each mask allows a two-dimensional sheet of light to be projected through the cell.

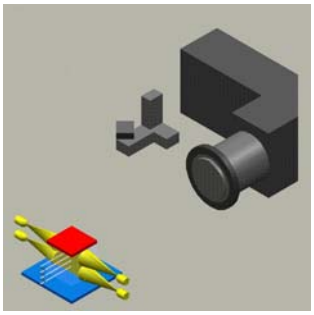

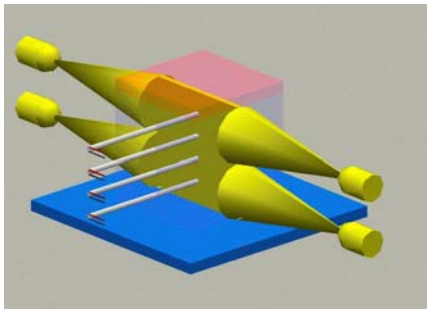

The transparent cell is filled with low viscosity silicone oil, the test fluid in the experiment. Small particles are suspended in the fluid, their job is to allow motion of the transparent fluid to be seen by the CCD camera as they scatter light. The two dimensional light sheet illuminates a plane through the fluid, preventing flow in other parts of the cell from being observed. This effectively allows flow within the specific illuminated plane to be studied. This is a novel approach to generating a light sheet. It is normally done using power hungry lasers and heavy optics, not an option for a nano-satellite.

Fluid flow is induced by the thin film heater and heat sink, which set up a temperature gradient across the cell. The images below show the flow observed in similar experiments and highlight the need to perform the experiment in a microgravity environment.

(a) 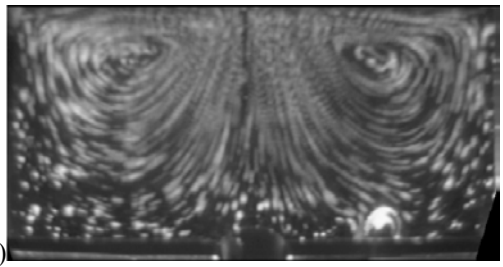 (b) 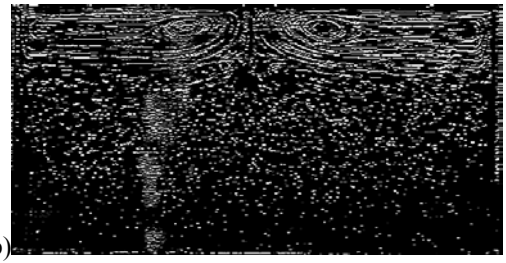

(a) Shows the flow pattern observed by the STDCE –1 experiment in microgravity. (b) Obtained under identical conditions but in Earth's 1g environment

The following diagram shows the interaction of various systems in the NanoSpaceLab.

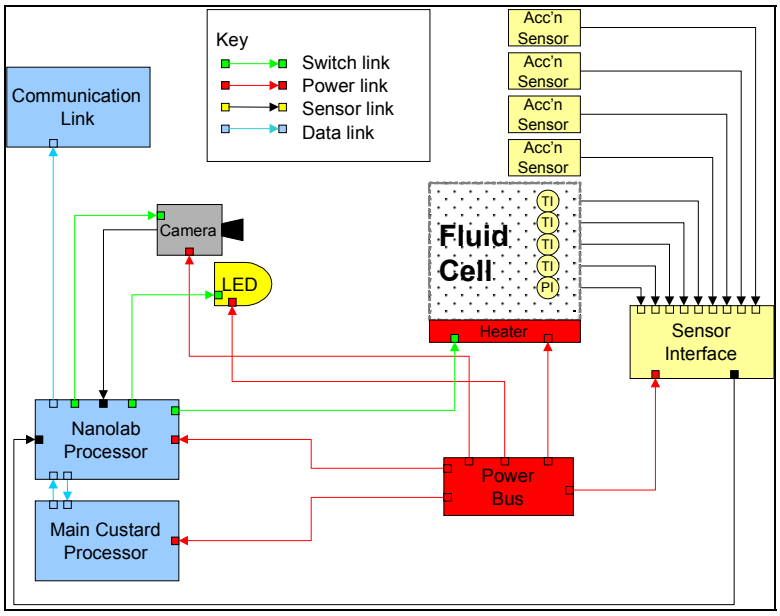

B.20.4.Other payloads

Further work should continue to monitor the possibility of performing experiments from other research areas; this would demonstrate the versatility of the nanolab platform.

Future ESA campaigns for student experiments could provide a test-bed for microgravity check-out of a nanolab payload on a parabolic flight.

The NanoSpaceLab is not just a microgravity science bench, it is much more versatile. The reserved nanolab volume could be used to demonstrate the use of single or multiple devices. Two such devices have been identified already:

- Autonomous Star Tracker
  A SIRA star tracker is available but makes use of conventional CCD technology. A star tracker is being developed at the Rutherford Appleton Laboratories based on APS technology.

- FEEP Thruster
  A FEEP thruster being developed by Priya Fernando, a PhD student at Cranfield could be accommodated on a small satellite platform such as Custard. The best way to demonstrate the use of the FEEP thruster would be to mount it to thrust around a roll axis of the spacecraft. This would gradually increase the roll rate of the spacecraft, which would be easy to detect

A procedure to solicit proposals for NanoSpaceLab experiments or technology demonstrations should be adopted. This will help to ensure that the Custard spacecraft realises the aims of the various parties involved with the project (AMSTAP, BNSC, Cranfield University, Southampton University, RAL, MMS). The suggested procedure is to issue a Custard Nanolab Research Announcement to the following:

- UK aerospace industry
  - Government bodies (E.g. RAL, BNSC, Leicester Space Centre)
  - Academic organisations (Cranfield University; Southampton University; Physics, Aeronautical and Mechanical Engineering departments of other UK Universities)
  - British science community
- Public

B.20.5.Conclusions

Conclusions can be drawn from each phase of work that was carried out:

- Research:
  Initial research identified a host of MST devices that have space applications.
  Application of MST can save much mass and power, allowing the design of extremely capable yet miniature spacecraft.

- Evaluation of missions
  Evaluation of different missions shows that a NanoSpaceLab would provide an ideal platform for experiments to be conducted in space or for the testing of new space technology. Both applications can make use of MST devices. The modular design gives the Custard spacecraft versatility and potential for commercial off-the-shelf manufacture. This in turn could allow it to be mass-produced cheaply for commercial gain.
  The experiment proposed in this report satisfies the objectives of the Custard project and other relevant bodies. It will demonstrate MST applications in space, provide a test-bed for proving the use of UK devices in space, perform a useful science function, demonstrate the use of a modular nano-spacecraft and hopefully stimulate education in aerospace.
- Design
  The proposed experiment will contribute to the understanding of thermocapillary flow, which could aid the design of future MST devices as well as Earth based processes such as oil extraction and welding.
  The experiments will be performed autonomously; a maximum 29 seconds of video data can be stored using a dedicated processor. A further 6 to ten minutes per orbit could be provided by direct down-link when the satellite is over a ground-station. Image processing will demonstrate the use of ESA's Doria technique. It has been estimated that applying the Doria technique to the proposed experiment will reduce the amount of data by 73%.
  A novel method of generating a two-dimensional light sheet has been developed. It offers great mass and power savings over the conventional method of using lasers and complicated optics. The light sheet will allow thermocapillary flow within a narrow plane to be observed and studied.

- Future nanolab payloads
  A procedure for identifying new experiments and technology to be flown in the nanolab was identified. The aim of the procedure is to make sure that the nanolab meets the original aims of the Custard project and also some of the objectives of AMSTAP and BNSC.
- Comparison to other small technology demonstration test-beds
  The NanoSpaceLab was compared to NASA's Get Away Special (GAS) facility for small payloads. Although the GAS is a much larger facility than the NanoSpaceLab, it compared favourably, offering the following advantages:
- 3 month test duration instead of one week shuttle mission.
- Demonstration of technology with fewer services provided, demonstrating the technology works even in a demanding environment.
- Demonstration of technology aboard a nano-satellite, not a large box more relevant to conventional satellite payloads.
- Lower cost. NASA charge for the use of the GAS facility. The nanolab platform may offer a free service although the customer would be expected to contribute to the development of the Custard spacecraft in return.
- The nanolab would offer a better microgravity environment. The shuttle is larger, carries much more equipment and astronauts; all of these generate disturbing forces. The shuttle also flies in a much lower orbit, where atmospheric drag would be the greatest force disturbing the gravity environment.
- GAS does not enable real time data to be returned to Earth for verification that the technology is functioning correctly.

B.20.6.Further work

Further work should be carried out to research or develop the following areas:

- Implement the proposed system of Custard NanoSpaceLab Research Announcements.
- Identify and develop more experiments suitable for the nanolab, allowing the highest quality research to be flown.
- Identify technology whose demonstration would benefit UK industry.
- Research the use of a FEEP thruster and the SIRA or RAL miniature star tracker.
- Further investigate the use of ESA's Doria technique, possibly obtaining a copy of the software and testing its application to the proposed experiment.
- Monitor ESA campaigns for student experiments in microgravity. A nanolab experiment could be flown on a parabolic flight, enabling pre-launch check-out under microgravity conditions.
- Continue detailed design phase of proposed experiment, moving on to construction. More work should be done to develop a simple mechanism using a shape memory alloy to mix the test fluid after launch.
- Identify more MST devices to use in the nanolab. In particular, monitor the progress of APS cameras and identify a thin film heater with an integral MST temperature sensor.
- Study thermal design of the proposed experiment, investigating the possibility of controlling the amount of heat removed by the external radiator.

B.21. Doris Schmitz

The CUSTARD study was initiated by an AMSTAP report proposing the investigation of a nano-satellite as a Micro Systems Technology demonstrator. Thus representing the primary objectives the secondary objectives were defined as versatility, autonomy, safety and the need for a low cost budget.

Potential payloads were investigated during the first term resulting in two possible payload options. Usually a satellite design is driven by the specific payload requirements, but this was not the case at the CUSTARD mission, due to the objective of versatility. For CUSTARD the overall system drivers were identified as follows:

- Nano-satellite in medium range with overall 4 kg mass
- an overall power assumption of 3W average and 6W peak of the satellite subsystems (without payload)
- cost limitations due to stringent funding

The following table gives an overview of the main areas of CUSTARD's design.

Prime objective	• nano-satellite • Micro-Systems technology demonstrator
Secondary objectives	• multi-user capability • autonomy • safe bus-system • limited economical resources
Payload	• Nano-SpaceLab • Spacecraft Interaction Mission • Optional: De-orbit
Designed lifetime	≥ 3 months
Launcher, Orbit	• Ariane and Delta • 800km altitude, sun-synchronous, noon-midnight
Spacecraft	• Power: 18W, primary and secondary batteries (lithium-ion) • Telemetry: 4 dipole antennae at 9.1-12GHz band • AOCS: 3 axis attitude control via cold-gas thrusters, reaction wheels, sun sensors, magnetometer and gyroscope • Structure: cuboid satellite with deployable solar arrays, 4kg mass
Operation modes	• Normally sun-pointing • Target-pointing (Spacecraft Interaction Mission) • Acquisition after release from launcher • Emergency in failure of solar array deployment

Table B.21.1: Custard mission summary

B.21.1.AOCS objectives and responsibilities

Within the CUSTARD design of the ASE group the author was a member of the AOCS sub-group. First each group member investigated in stabilisation techniques and then the group voted for a 3-axis attitude control mode. After that each group member specialised in a part of the whole AOCS design and the authors subject consisted of the design of the attitude determination subsystem for the nano-satellite CUSTARD. The present report documents the work that was carried out by the author during the ASE GDP in the first two terms of the academic year 1999-2000.

The attitude determination subsystem of a satellite detects the spacecraft's orientation in space by a combination of sensors the spacecraft carries on-board. As the design of this configuration

is dependent on many factors, it was necessary to identify the parameters of prime influences to the design.

Hence the author first identified the primary objectives and secondary objectives as outlined in the mission overview. This was followed by the translation into systems-level and subsystems-level requirements. The systems-level requirements were identified as the need to maintain the following budgets:

- Mass
- Power
- Cost

The subsystems-level requirements are directly dependent from the payload:

- pointing accuracy
- pointing directions of the satellite and
- their possible change during the satellite's lifetime

The latter ones were specified by an analysis of the operation modes the satellite demands during the mission stage and during the supportive modes, i.e. the charge of the batteries or emergency modes.

In addition to this, the author investigated the MST availability of potential sensors:

- Gyroscopes
- Magnetometers
- Earth sensors
- Sun sensors
- Star sensors

The research for these devices was already influenced by the major design drivers, the systems-level constraints in mass, power and cost.

A following trade-off between the characteristics of the found sensors with respect to the identified requirements then finally led to a sensor configuration for the proposed two missions *Nano-SpaceLab* and *Spacecraft Interaction Mission*. Modifications of the orbit, the main operation mode and other subsystems as well as the grading down of the achievable accuracy ranges required several redesigns of the sensor configuration. The iterative sequence of this design process is shown in this report.

B.21.2.Sensor Configuration and results

With respect to the given constraints in mass, power and cost, the following sensors were selected to form the attitude determination subsystem:

Sensor type	Weight	Input power	accuracy	cost
Analogue sun Sensor (IRF)	0.061kg	0.048W	0.1°	low
Magnetometer (533, APS)	0.018kg	0.030W	0.1° Earth model: 0.5° - 3°	low
coarse gyro (CVG, JPL)	0.030kg	1.000W	Drift: 0.1°/hour	low
2 solar cells	0.006kg	-	- (indicators)	low
Summary	0.115kg	1.348W	medium (0.1-3°)	low

Table B.21.2: Possible sensor configuration for highest accuracy in terminator orbit with sun pointing mode

During the project, the pointing direction was changed from Earth pointing towards sun pointing, thus enabling the attitude determination to increase the accuracy by simplification of the systems design:

- No need any more for spherical coverage by sun sensors, only one sun sensor would supply the accuracy of two satellite axes (out of sun eclipse)

- Sun indication may be achieved by the use of simple sun presence sensors, the solar cells of the power generator

During the main operation mode, the sun pointing, the attitude determination subsystem achieves an accuracy of 0.1° in the satellite's x- and y-axis rectangular to the sun-pointing z-axis. Those accuracy levels are achieved by the use of the fine analogue sun sensor of IRF and this enables the solar cells to generate maximum power. The remaining z-axis is detected by a 3axis magnetometer, thus limiting the possible accuracy on ranges of 0.5°- 3° due to the poor magnetic field model of the Earth. In combination with Kalman filters improvements in the range of 0.2 – 0.4° are possible.

During the additional modes the following devices are used:

- in the acquisition mode after tip-off from the launcher, the gyroscope detects the angular rates of the satellite and provides the necessary information to stop the satellite's rotation
- the non-deployed solar arrays of the power generator (complemented by two additional cells) in combination with a control loop support rough indication of the sun's direction in the acquisition mode for orientation towards the sun and in later modes of re-orientation towards the sun
- the CCD-camera of the payload module is integrated in the AOCS software during the target-pointing mode of the *Spacecraft Interaction Mission* and provides the higher accuracy levels with respect to the target demanded during this mode
- the gyroscope will support the attitude information between the time varied measurements of the 3-axis magnetometer in sun eclipse and thruster firing mode

The present work also shows the reasons why no other attitude sensor types had been selected:

- star sensors are still heavy, consume a large amount of power and are high-cost devices
- Earth sensors could not be used due to the chosen sun-pointing mode the satellite normally operates in and
- a full GPS system with comparable accuracy range would require longer baselines between several antennas than the satellite is able to offer.

By this configuration, the attitude determination subsystem enables the CUSTARD satellite to detect its orientation in space within the outlined accuracy range and the requested pointing directions.

B.21.3.Uncertainties and future work

Whereas the final sensor configuration well meets the primary objective of CUSTARD for MST demonstration and the secondary aims of an autonomous, safe and low-cost design, the secondary goal of a versatile satellite bus system could not be achieved within the given nano-size constraints.

The design of the configuration in combination with the found sensors on the market shows that high or very high accuracy levels (< 0.1°) may not be met with available sensors. Even a medium accuracy range in an Earth pointing mode (0.1 - 0.2°) is still above the given budget for the attitude determination (850grams). Therefore only an accuracy range about 1° in all 3 axes would be achieved for an Earth pointing mode.

The vote for a sun-pointing mode increased the pointing accuracy to the already described range, but the question remains, whether this is a wishful pointing direction for a versatile satellite. Common payloads usually opt for an Earth-pointing direction of the satellite. The present system design also limits the use of the satellite to lower Earth orbits by the necessary use of a magnetometer.

In addition to this, uncertainties in different parameters of influence were detected:

- the pointing accuracy required by the *Spacecraft Interaction Mission* in the axis normal to the target and during the supportive stages of thruster firing without relation to a target
- the exact prizes of the several sensor devices
- the complexity of the control loop, including the payload's CCD-camera and the solar generator

Beneath the clarification of the mentioned uncertainties, a close look on the sensor market in future time is necessary. Whilst many laboratories, companies and universities are researching MEMS and MOEMS, new devices will become available with a potential to increase the accuracy level and to reduce the prizes of the devices. This applies especially for gyroscopes and star sensors.

As this work took place in stage A/B of the project, the development of an appropriate mathematical model was not designed which forms part of the next project stage.

B.22. Chih-Cheng Yeh

This report discusses one of the possible missions - debris detection mission and introduces the mission technology, as well as describing the project management of Mission Applications & Payloads Group. A literature survey covering the methods of debris detection and MST technology in space system has been conducted. Ground-based and space-based debris detection methods have been studied. MST technologies, future mission concepts and future technologies of MST have also been explored.
The research has found higher weight budget required for selecting the debris detection mission out of the possible mission list. In addition, the MST technology is a sensible way to significantly decrease the cost and therefore enable the commercialisation as it could miniaturise a system by building a modularised sub-system for the mass production. Lots of micro sensors are available for nano-satellites, but the use of MST technology in micro subsystems is still under development. Sub-system modularisation is an increasing trend. Potential applications are limited in power, data rates and optical resolution capacity.

B.22.1.Debris detection mission

Debris detection has been implemented on the ground since 1961 and aboard spacecraft since 1983. Ground-based radar, optical and infrared sensors have been using to track more than 7500 objects of which minimum size is about 1 0 cm for a low earth orbit, and about 1 m for geostationary orbit. The vast majority of man-made debris comprises objects smaller than 10 cm which are not tracked during routine ground-based operations and threaten the safety of spacecraft. Space-based debris detectors can provide important information on the population of micron to millimetre size particles in space. But to date it seems that the debris can not apply to nano satellites directly as all of the weight or power required for debris detection mission are much greater than the mass/power budget of nano satellite.

B.22.2.Mission technology

The mission technology of this project is MST technology. The main objective of most space agencies is to reduce costs. Traditional cost reduction approaches such as new design, production paradigms, modularity, and pre-fabrication are not to the required level. In order to meet the required level a sensible way should be to significantly decrease costs. MST technology uses well-known processes from microelectronics like material deposition, photo lithography and etching to fabricate structures in the micro range. It can combine electronics, mechanics and optics at significant reduced dimensions to achieve high performance and high complexity in a very small volume. It can also allow the production of micro-systems, understood to be the integration of microelectronics with peripherals and micro-mechanics, and resulting in devices such as application-specific integrated micro-instruments (ASIM) and eventually nano-satellites. Obviously, MST technology is suitable for building modularised system consisting of several or identical small units. Mass production of space sub-systems and system modularisation should be possible. MST has been derived from the semiconductor industry, so these techniques permit a very high quality of reproduction, and significant manufacturing cost reductions are also possible. It also should enable commercialisation.
In order to decrease costs, the mass of satellite should be reduced but maintain the performance as launch is one of the highest cost factors. So traditional sensors and instruments should be replaced by micro sensors and micro instruments. In addition, AOC also need micro thrusters; advanced solar cells and micro processors are required by electrical; mechanical requires the needs of shielding techniques for debris and radiation shielding. Miniaturized heaters are required by nano lab mission, and interaction mission requires the needs of micro laser-range finder.

Surveying the patent database of US patent & trademark office (USPTO), most of MST (MEMS) technologies are associated with process or sensors. From the curve of Figure 1 it can be found

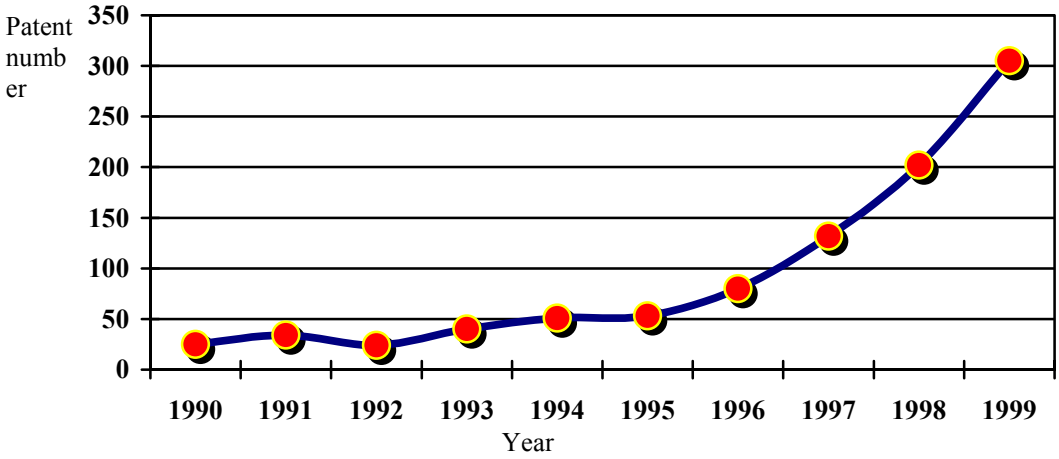

Figure-1 The relation between patent numbers and year

that the patent numbers of MST technologies increased slightly from 1990 to 1995, and then dramatically increased from 1995 to 1999. It means that the fundamental research of MST technology had a significant progress in 1995, and convinced people that MST technology was potential to commercialise. Then lots of researchers concentrated on researching MST technology.

MST technology is popularly applied in sensors. The available micro sensors are: Earth sensors, sun sensors, star sensors, magnetometers, gyroscopes, pressure sensors, temperature sensors, acceleration sensors, and spectrometers. Some components or instruments are available such as GPS receivers, actuators, motors, heat pipes, valves, pipes, and cameras/ CCDs. Several demonstration missions from US are scheduled to fly in the near future and will include micro gyroscope, micro accelerometers and micro magnetometers.

B.22.3.Future mission concepts and future technologies

(1) Spacecraft constellations

Nano-satellites could either replace existing systems or lead to complete new applications not possible before. A fleet of nano satellite, for example, can form a constellation. It could be used to observe the whole Earth at the same time. Possible applications are detection of pollution and detection of forest fires. Nano satellite constellations can also be applied to measure the temperature of entire atmosphere.

(2) Inspector spacecraft/ black box

Nano satellite can be attached to a larger spacecraft, and collect telemetry data of host spacecraft. In case of emergency this 'Black Box' could send the collected data to the ground helping the operators with fault detection.

(3) Relay satellites

It could be used as a relay satellite between International Space Station and incoming vehicles.

(4) Space science missions

Nano satellites could undertake space science missions to measure radiation and magnetic field in space. Life science study that confined to small volumes can have been made possible by MST technology.

The challenge of future technology is to reduce costs, reduce the delay of space activities, and reduce susceptibility to radiation. So more powerful MST technology should be developed. Sub-system modularisation, sub-system standardization, and mass production are also future technologies. Higher efficiency solar cells are also required in the future as nano satellite just has small area that can be attached by solar array.

B.22.4.Conclusion

The weight of space-based infrared debris detector relative to other detectors, e.g. optical detectors, is lighter, but it is still over weigh. So it is reasonable that debris detection mission was out of possible mission list in Phase II.
Lots of MST technologies have been developed, but less of them were commercialised. In order to lead the development of nano-satellites, further study MST-related patents and co-operating with relevant research centres are necessary.
For future mission required, solar cells with high efficiency, up to 40%, have a high priority, but as yet there are no specific techniques. The standards of sub-system are required to set by some international organizations, as sub-system standardisation is an increasing trend.