CRANFIELD UNIVERSITY

Xiuxian Xia

# Dynamic Power Distribution Management for All Electric Aircraft

SCHOOL OF ENGINEERING

MSc by Research Thesis

February 2011

# Cranfield University

School of Engineering

MSc by Research Thesis

Academic Year 2010 - 2011

Xiuxian Xia

# Dynamic Power Distribution Management For All Electric Aircraft

Supervisor: Craig P Lawson

January 2011

© Cranfield University, 2011. All rights reserved. No part of this publication may be reproduced without the written permission of the copyright holder.

# ABSTRACT

In recent years, with the rapid development of electric and electronic technology, the All-Electric Aircraft (AEA) concept has attracted more and more attention, which only utilizes the electric power instead of conventional hydraulic and pneumatic power to supply all the airframe systems. To meet the power requirements under various flight stages and operating conditions, the AEA approach has resulted in the current aircraft electrical power generation capacity up to 1.6 MW. To satisfy the power quality and stability requirements, the advanced power electronic interfaces and more efficient power distribution systems must be investigated. Moreover, with the purpose of taking the full advantages of available electrical power, novel dynamic power distribution management research and design for an AEA must be carried out.

The main objective of this thesis is to investigate and develop a methodology of more efficient power distribution management with the purpose of minimizing the rated power generating capacity and the mass of the electrical power system (EPS) including the power generation system and the power distribution system in an AEA. It is important to analyse and compare the subsistent electrical power distribution management approaches in current aircraft. Therefore the electrical power systems of A320 and B777, especially the power management system, will be discussed in this thesis.

Most importantly the baseline aircraft, the Flying Crane is the outcome of the group design project. The whole project began in March 2008, and ended in September 2010, including three stages: conceptual design, preliminary design and detailed design. The dynamic power distribution management research is based on the power distribution system of the Flying Crane.

The main task of the investigation is to analyse and manage the power usage among and inside typical airframe systems by using dynamic power distribution management method. The characteristics and operation process of these systems will be investigated in detail and thoroughly. By using the method of dynamic power distribution management, all the electrical consumers and sub-systems powered by electricity are managed effectively. The performance of an aircraft can be improved by reducing the peak load requirement on board. Furthermore, the electrical system architecture, distributed power distribution system and the dynamic power distribution management system for AEA are presented. Finally, the mass of the whole electrical power system is estimated and analysed carefully.

Key Words:

Dynamic power distribution management  Distributed power distribution  Active Power management  Automatic load management

# ACKNOWLEDGEMENTS

Firstly I would like to express my sincere gratitude to my supervisor-Dr Craig Lawson, for his enthusiastic help, encouragement, supervision and guidance during the GDP and IRP.

Furthermore, my thanks must go to my classmates studying together with me. Thanks for their warm help, unwavering support, profoundly understanding and hard working. We worked hard together and cooperated closely. Our project would not succeed without their effort.

I would also like to take this opportunity to thank the sponsors, the AVIC and FAI. I would not have this chance of studying in Cranfield University without their support and trust.

Finally, I will give my special appreciation to my wife, my daughter and our families for their love, understanding and encouragement. Without their support, I could hardly come this far.

# TABLE OF CONTENTS

ABSTRACT ..... I
ACKNOWLEDGEMENTS ..... III
TABLE OF CONTENTS ..... V
TABLE OF FIGURES ..... VII
TABLE OF TABLES ..... VIII
ACRONYMS ..... IX
1 Introduction ..... 1
1.1 Background ..... 1
1.2 Objective ..... 2
1.3 Methodology ..... 2
2 Literature Review ..... 5
2.1 Electrical power distribution and load management ..... 5
2.2 Conventional Aircraft ..... 8
2.3 More Electric Aircraft ..... 10
2.4 More-Electric Engine ..... 12
2.5 Electric Actuation ..... 14
2.6 All-Eletric Aircraft ..... 18
2.7 Development on Electrical Power System ..... 19
2.8 SSPC Technology ..... 24
2.9 Health Management of EPS ..... 27
2.10 Conclusion ..... 27
3 Different Power Management Methods ..... 29
3.1 Power Management of A320 ..... 29
3.1.1 Main Generators and APU Generator ..... 31
3.1.2 External Power ..... 31
3.1.3 Emergency Generator ..... 32
3.1.4 Static Inverter ..... 32
3.1.5 Transformer Rectifiers ..... 32
3.1.6 Batteries ..... 33
3.1.7 Power Distribution ..... 33
3.1.8 Discussion ..... 34
3.2 Power Management of B777 ..... 36
3.2.1 The Main Electrical Power System ..... 37
3.2.2 The Backup Electrical Power System ..... 38
3.2.3 The Power Distribution System ..... 39

3.2.4 Electrical Load Management System ..... 41
3.2.5 Discussion ..... 45
3.3 Active Power Management for AEA ..... 46
3.3.1 Electrical Power System ..... 46
3.3.2 Power Distribution System ..... 48
3.3.3 Active Power Management ..... 50
3.3.4 Discussion ..... 51
3.4 Conclusion ..... 52
4 Electrical Power System of Baseline Aircraft ..... 55
4.1 Power Generation System ..... 55
4.2 Power Distribution System ..... 58
4.3 Load Analysis ..... 60
4.4 Load Allocation ..... 64
4.5 Conclusion ..... 66
5 Dynamic Power Distribution Management for AEA ..... 67
5.1 Load Priority Levels ..... 68
5.2 Power Request Equation ..... 71
5.3 Load Control Equation ..... 72
5.4 Dynamic Power Distribution Management ..... 74
5.5 Conclusion ..... 79
6 Health Management of Electrical Power System ..... 81
6.1 Diagnostic Approach ..... 81
6.2 Prognostic Approach ..... 82
6.3 Conclusion ..... 85
7 Mass Calculation ..... 87
7.1 Mass of Electrical Power Components ..... 87
7.2 Mass of wiring ..... 91
7.3 Conclusion ..... 91
8 Final Conclusions ..... 93
9 Future Work ..... 95
REFERENCES ..... 97
APPENDIX A – LOAD STATISTICS ..... 103
APPENDIX B – MASS ESTIMATION OF WIRING ..... 107

# TABLE OF FIGURES


Figure 1- 1 Three-view Drawing [4] ..... 2
Figure 2- 1 Comparison of Centralised and Distributed PDS [6] ..... 6
Figure 2- 2 3H Architecture of a Conventional Aircraft [5] ..... 8
Figure 2- 3 Conventional Power Distribution Schematic [3] ..... 9
Figure 2- 4 MEA Power Distribution Schematic [3] ..... 12
Figure 2- 5 Comparison of Conventional Aircraft and MEE [9] ..... 13
Figure 2- 6 Plan of EHA [22] ..... 16
Figure 2- 7 Plan of IAP [22] ..... 16
Figure 2- 8 Electrical System Evolution [24] ..... 20
Figure 2- 9 Advanced Aircraft EPS Architecture of Future [11] ..... 23
Figure 2- 10 SSPC Current Squared Time Curve [12] ..... 26
Figure 2- 11 A SSPC Module Manufactured by DDC ® [27] ..... 26
Figure 3- 1 Electrical Power System Architecture of A320 [41] ..... 30
Figure 3- 2 Simplified B777 Electrical System One Line Diagram [43] ..... 36
Figure 3- 3 B777 Electrical Load Management System (ELMS) [4] ..... 41
Figure 3- 4 B777 ELMS EU Modular Concept [4] ..... 43
Figure 3- 5 B777 ELMS Subsystem Function Overview [4] ..... 44
Figure 3- 6 B777 Data Bus Architecture and Systems Integration [4] ..... 45
Figure 3- 7 Electrical Power System Architecture of AEA [15] ..... 47
Figure 3- 8 Power Distribution Architecture of AEA [15] ..... 49
Figure 4- 1 Electrical System Schematic Diagram ..... 56
Figure 4- 2 Power Distribution and Management Architecture ..... 58
Figure 4- 3 Max Load Requirement Histogram ..... 62
Figure 4- 4 Loads Power Requirement with Different Importance Levels .... 64
Figure 4- 5 Lay out of EPDS ..... 65
Figure 5- 1 Power Distribution Management Flow Chart ..... 75
Figure 5- 2 Load Management Flow Chart ..... 76
Figure 6- 1 Diagnostic Flowchart of EPS [46] ..... 82
Figure 6- 2 DPHM Architecture of EPS [46] ..... 84

# TABLE OF TABLES


Table 2- 1 The differences of four forms of power [3]..... 10
Table 2- 2 Common Types of Power Generation [19]..... 21
Table 4- 1 Power Requirement of each system ..... 61
Table 4- 2 Power Requirement of Different Types of Loads..... 62
Table 4- 3 Loads Power Requirement with Different Importance Levels ..... 64
Table 5- 1 Default status matrix of all switch devices..... 69
Table 5- 2 Priority Levels at each Flight Phase ..... 71
Table 5- 3 Loads Priority Levels at Cruise Flight Phase..... 77
Table 6- 1 Prognostic Approach to EPS [46] ..... 83
Table 7- 1 Mass of EPS with Dynamic Power Distribution Management ..... 89
Table 7- 2 Mass of EPS without Dynamic Power Distribution Management. 90
Table A- 1 Load Requirement of the Flying Crane..... 103
Table B- 1 Reference table [49] ..... 109
Table B- 2 Mass of Cables ..... 110

# ACRONYMS

| | |
|---|---|
| AEA | All-Electric Aircraft |
| AEE | All-Electric Engine |
| AMAD | Aircraft Mounted Accessory Drive |
| AMB | Active Magnetic Bearings |
| APB | Auxiliary Power Breaker |
| APU | Auxiliary Power Unit |
| Auto TR | Auto Transformer Regulator |
| AVIC | Aviation Industry of China |
| BCL | Battery Charge Limiter |
| BPCU | Bus Power Control Unit |
| CB | Circuit Breaker |
| CF | Constant Frequency |
| CMS | Central Maintenance System |
| CSD | Constant Speed Drive |
| ECS | Environmental Control System |
| EHA | Electro-Hydrostatic Actuation |
| ELCU | Electronic Load Control Unit |
| EMA | Electromechanical Actuation |
| EPS | Electrical Power System |
| EPDS | Electrical Power Distribution System |
| ESS LTR | Essential Low Voltage Transformer Regulator |

| | |
|---|---|
| FCS | Flight Control System |
| GCU | Generator Control Unit |
| GDP | Group Design Project |
| GSE | Ground Support Equipment |
| HP | High Pressure |
| HTR | High Voltage Transformer Regulator |
| IAP | Integrated Actuator Package |
| IDG | Integrated Drive Generator |
| IGBT | Insulated Gate Bipolar Transistor |
| IPS | Ice Protection System |
| IS/G | Integrated Starter and Generator |
| LPG | Low Pressure Generator |
| LTR | Low Voltage Transformer Regulator |
| MEA | More Electric Aircraft |
| MEE | More-Electric Engine |
| PAX | Passenger |
| PDMS | Power Distribution and Management System |
| PM | Power Management |
| PMC | Power Management Centre |
| PPDU | Primary Power Distribution Unit |
| PPDC | Primary Power Distribution Centre |
| PPU | Primary Power Unit |

| | |
|---|---|
| PSA | Power Supply Assembly |
| RAT | Ram Air Turbine |
| RPDU | Remote Power Distribution Unit |
| SFC | Specific Fuel Consumption |
| SPDC | Secondary Power Distribution Centre |
| SPDC | Secondary Power Distribution Unit |
| SPU | Secondary Power Unit |
| SSPC | Solid State Power Controller |
| TRU | Transformer Rectify Unit |
| VF | Variable Frequency |
| VSCF | Variable Speed Constant Frequency |

# 1 Introduction

## 1.1 Background

Due to the rapid development of electrical and electronic technologies, the concept of More-Electric Aircraft (MEA) and All-Electric Aircraft (AEA) is coming true. Some kind of MEA utilises the electrical power to drive airframe subsystems nowadays, which used to be supplied by the pneumatic, hydraulic or mechanical power including flight control actuations, environmental control system (ECS), ice protection system (IPS), and miscellaneous other small systems [1]. To a great extent, the AEA would not only improve aircraft safety and reliability, but also reduce the design, development and test costs. Furthermore, the labor costs are reduced, along with the direct and the life-cycle costs [2]. At the same time, only applying the single power source - the electrical power can increase the reliability, supportability and maintainability of aircraft. However, it is most significant how to control and manage the enormous number of power electronic components using in power conversions and power consumers that AEA will contain. It is reported that at least 1.6MW electrical power is the basic power requirement for a new generation 300 pax passenger airliner [3]. In order to take the full advantage of electrical power available, more efficient power usage and management for AEA must be studied.

Distributed power distribution and automatic load management can make the most of the capacity of power sources and save the mass of the whole electrical power system，because the maximum load requirement decreases dramatically and the overall length of the power cables is shortened. Therefore, the engine can become more efficient and then the Special Fuel Consumption (SFC) can also be meliorated.

The current study is based on the baseline aircraft, the Flying Crane which is a

typical 130-150 seats aircraft for the Chinese domestic and global market. The three-view drawing of the Flying Crane is illustrated in figure 1-1.

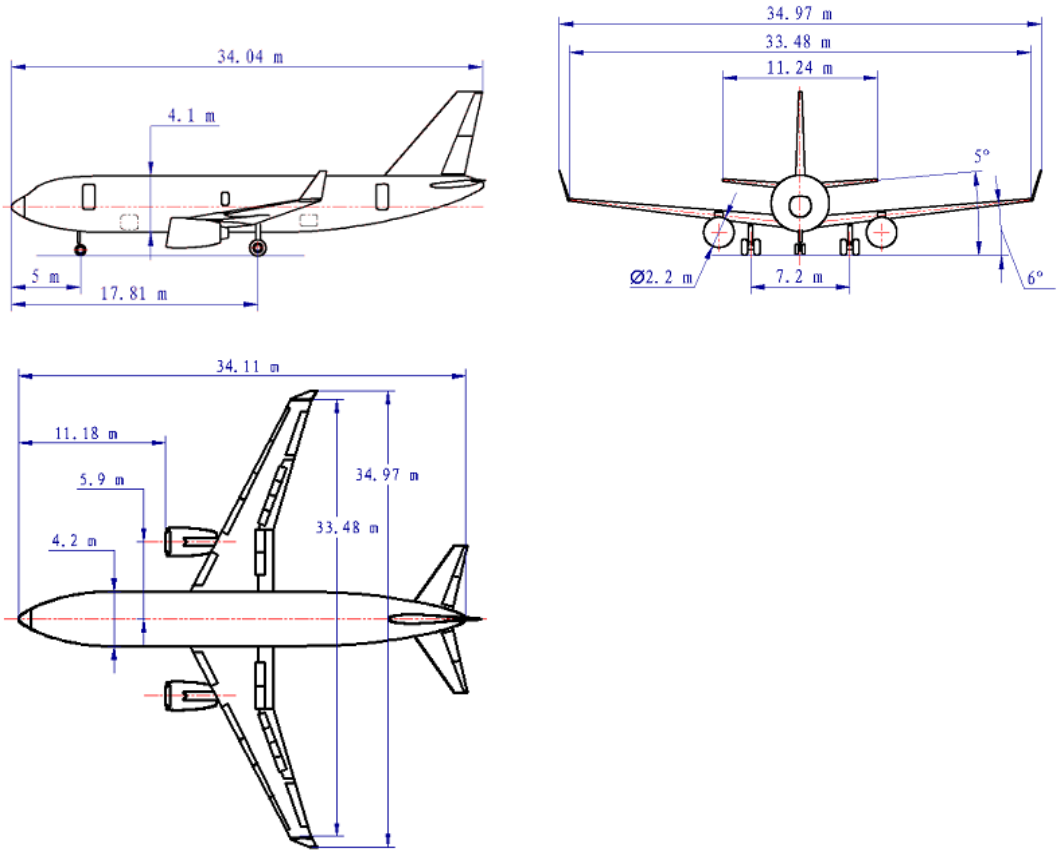


**Figure 1- 1 Three-view Drawing [4]**

## 1.2 Objective

The main target of this thesis is to develop an effective methodology of dynamic power distribution management of EPS, so as to take the full advantages of the power capacity and optimize the mass of the EPS in AEA. In the meantime, the health management of EPS must be taken into consideration to improve the safety, reliability and maintainability of the whole electrical power system.

## 1.3 Methodology

The aim of this thesis is to develop a new methodology - dynamic power

distribution management for an AEA. The dynamic power distribution management controls the electrical power from the power sources to the power consumers on the base of the flight mission requirements. This management method can take full advantage of the electrical power available and distribute the power effectively to each electrical load on aircraft. By using the dynamic power distribution management method, the mass and capacity of electrical power generation system can be minimized significantly, and the mass of the electrical power distribution system (EPDS) can also be reduced dramatically due to the decreased maximum power requirement and the shortened length of wiring. In order to verify the benefits which the dynamic power distribution management approach will bring for the AEA, some kind of baseline aircraft needs to be selected. The baseline aircraft chosen is a more electric aircraft named the Flying Crane, which is the outcome of the three-year group design Project (GDP) of AVIC students from March 2008 to September 2010.

The design rules and control logic of the dynamic power distribution management during various mission profiles and occasions will be brought forward. In order to control and manage the electrical power effectively with the method of dynamic management, the characteristics of various airframe systems on the baseline aircraft need to be analysed carefully. Due to adopting the distributed power distribution architecture, the mass of EPDS can be reduced significantly. Therefore, the mass of the electrical power system on the baseline aircraft and traditional aircraft will be calculated and compared.

# 2 Literature Review

## 2.1 Electrical power distribution and load management

Along with the development of the aeronautics, aircraft are becoming much more electrical. In the early 1950's, the 115V AC power generation was drawn into the power supply system of aircraft to provide electricity to some devices. Up to the 1980's, the first mass-produced civil transport aircraft adopting "Fly-by-Wire" (FBW) has been designed by Airbus, and this technique has been used in the A320 series. Boeing hooked on to this technique in B777 and subsequent series. In such design, the hydraulic and mechanical interfaces between the flight control surfaces and the control sticks were substituted by the electrical control interfaces integrated with digital computers. The utilization of FBW improves the reliability significantly and contributes to a dramatic mass reduction. The adoption of computers makes the control, detecting and monitoring much easier and more convenient [5].

In conventional aircraft, the EPDS is typically a centralised one. The bus hierarchy is the highlighted characteristic in the EPDS. The primary and secondary electrical power distribution units are situated in the forward electrical/electronics (E/E) bay normally, while the electrical consumers are located throughout the whole aircraft. All the power cables have to go out from the E/E bay, to the electrical loads located throughout the aircraft. All of the control wires join together in the E/E bay from all the switches contactors and circuit breakers, and these needs to be monitored. The load shedding function is implemented by various bus bar switches. So, the cables and wires between the power distribution units and the load terminals are very long and very heavy. While for modern aircraft, the advanced distributed power distribution system is adopted. Figure 2-1 illustrates the layout of the traditional centralised power distribution system and the advanced distributed power distribution system.

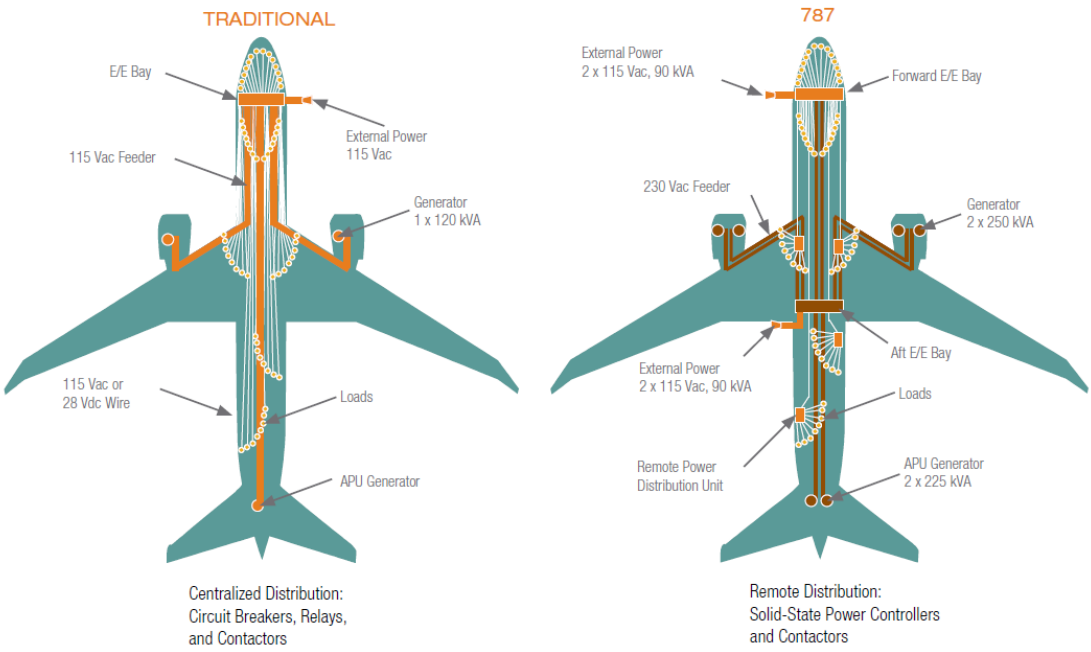


**Figure 2- 1 Comparison of Centralised and Distributed PDS [6]**

By using the distributed power distribution technology, the aircraft can be divided into several zones according to the locations. Consequently, the primary and secondary power distribution units are also located in different areas respectively. Each unit takes charge of the power supply and control of its own zone. All these remote control units can be interlinked through a data bus to exchange messages. Thus the length and weight of cables and wires can be reduced dramatically.

With the increased level of electrical power required in AEA, the electrical power system (EPS) needs to provide enough power to a single bus with not only one generator. Therefore, the hybrid system with various power sources may be a good choice. The electrical system of B787 is a mixed voltages system which consists of the four types of voltages below: 235 V VF (variable frequency), 115 VAC, 28 VDC, and ±270 VDC. The B787 electrical power system has two distinctive E/E bays, one forward and one aft. There are also a great many remote power distribution units (RPDU) to support aircraft electrical consumers. This system saves much mass by minimizing the power feeders' size. A minority of 235 VAC electrical loads can get power from the

after E/E bay. However, the largest number of electrical equipments-either 115 VAC or 28 VDC, can get power from the RPDUs located in the forward E/E bay. It needs to highlight that the RPDU is depending on the solid-state power controllers (SSPC) technology to a great extent rather than the conventional thermal circuit breakers (CB) and relays [6].

In conventional aircraft, the rated power capacity of the primary generators can provide enough electric power to all the electrical consumers during all flight phases. But nowadays it is difficult and impossible, because with the development of MEA or AEA technologies, the ECS, IPS, actuation system are becoming electrically powered, and the electric power requirement is increasing significantly. Most importantly, most electrical loads are not in operation at the same time, some of them only work in a short period of time, and some of them only work in snatches. For the sake of making better use of the limited power capacity of generators, the electrical power can be used on demand and more effectively by using the dynamic power distribution management method through the automatic monitoring, control and protection under all the flight phases and operational conditions.

In the last few years, a great many research projects on power management have been carried out. The “Distributed Electrical Power Management Architecture (DEPMA)” project goes into research on advanced electrical power management architecture [7]. In the United States, the “Power Management and Distribution System for a More Electric Aircraft” project has also been in process for couples of years [8], the main aim of which is to develop the electrical power distribution management centre (ELMC). Unfortunately, the detailed power usage of the ELMC system is not published. The B787 and A380 are both more electric aircraft. But how to apply and manage the electrical power on these two aircraft is unavailable. With regard to the AEA, there are no published reports or papers dealing with the strategy of load management.

Compared to the traditional centralised power distribution system, the main advantages of the distributed power distribution system are weight reducing, volume saving, improved reliability and maintainability. Moreover, a great proportion of systems' control function can be integrated into the electrical power distribution management system because of the improved load shedding capability. Therefore, the distributed power distribution system with advanced dynamic management ability will be the trend of development. With regard to the Flying Crane, this similar distributed architecture will be adopted.

## 2.2 Conventional Aircraft

The conventional aircraft embodies a series of systems depending on pneumatic, hydraulic, mechanical, and electrical power sources. The actuators used by the flight control system are still powered by hydraulic power in conventional aircraft. Therefore, on numerous currently civil aircraft, there still have several hydraulic pipelines to provide actuators with hydraulic energy from the pumps to flight control actuators. Figure2-2 illustrates the 3H architecture of conventional aircraft.

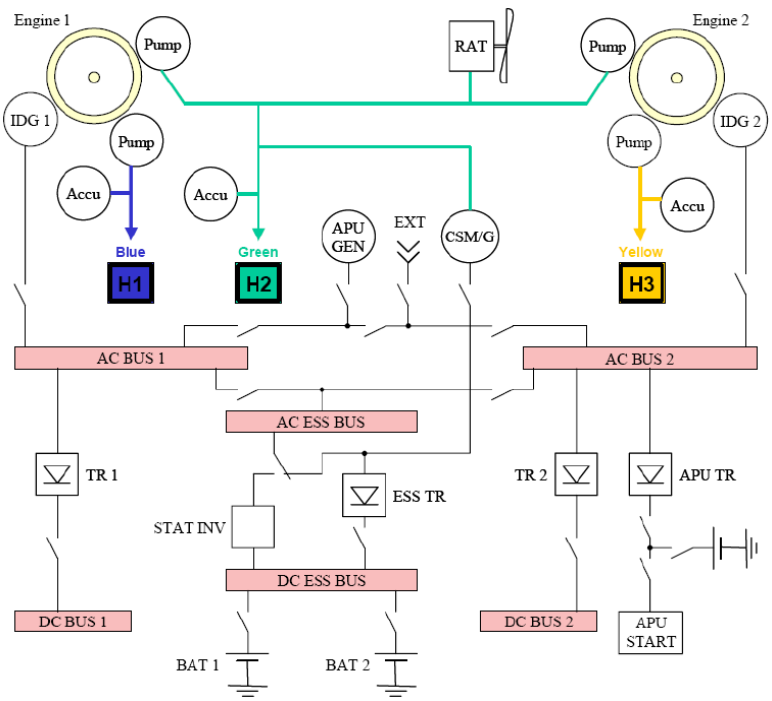


**Figure 2- 2 3H Architecture of a Conventional Aircraft [5]**

Figure2-3 shows the conventional aircraft power distribution architecture. In this architecture the engines convert the fuel into power. The majority of the power is used for driving the aircraft as propulsive power. While the remaining power is converted to other four non-propulsive powers: pneumatic power, mechanical power, hydraulic power and electrical power [3].

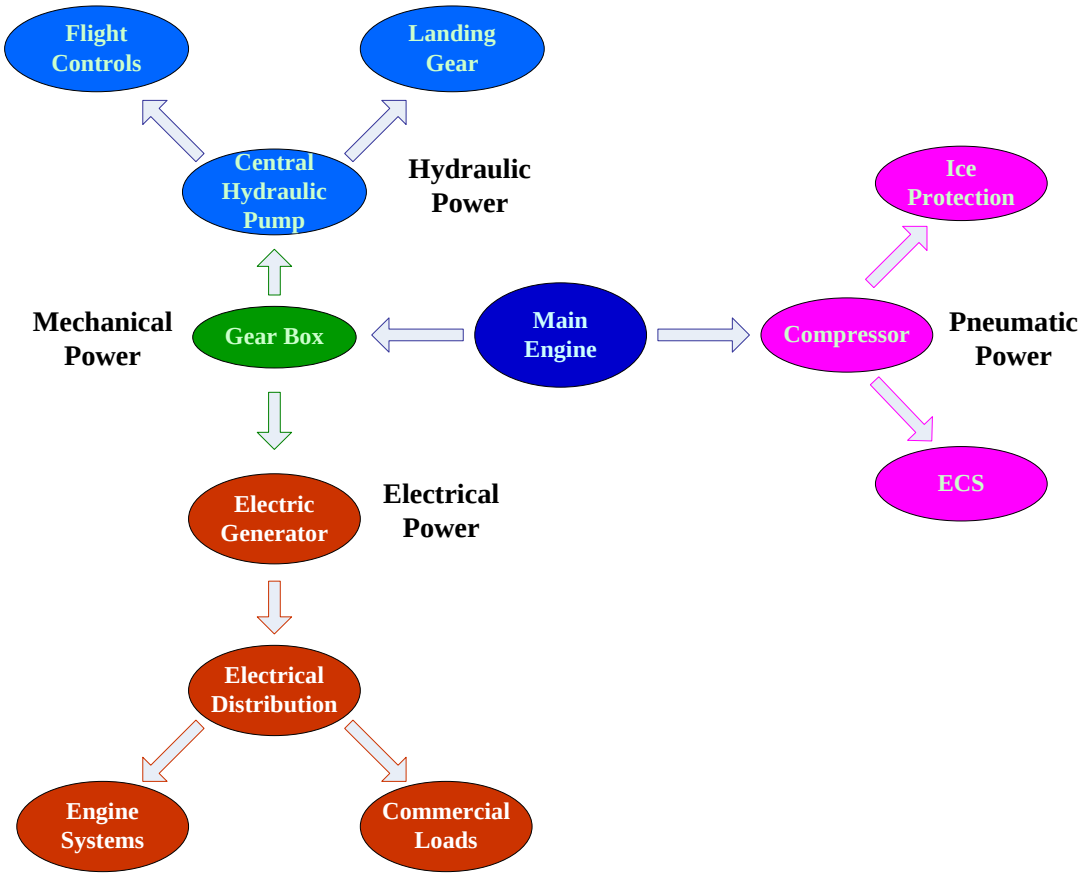


**Figure 2- 3 Conventional Power Distribution Schematic [3]**

The pneumatic system supplies the ECS, IPS, Engine start and the cabin pressure system with the hot air and pressure. The mechanical system mainly controls some engine equipments and other mechanically driven subsystems. The hydraulic system mainly provides power to the flight control surfaces, landing gears braking system and some other actuation systems. The electrical power system is to supply the electrical consumers. The main functions and disadvantages of the traditional secondary power sources are shown in Table 2-1.

**Table 2- 1 The differences of four forms of power [3]**

| Power Type | Function | Disadvantages |
|---|---|---|
| Pneumatic Power | Power the ECS and supply hot air for Wing Anti-Icing systems | Low efficiency; Difficult to detect leaks |
| Mechanical Power | To central hydraulic pumps, to local pumps for engine equipment and other mechanically driven subsystems, to the main electrical generator | High complexity; Poor maintainability |
| Hydraulic Power | To the actuation systems for primary and secondary flight control; to landing gear for deployment, retraction, and braking; to engine actuation; to numerous ancillary systems. | Heavy and inflexible; Potential leakage of dangerous and corrosive fluids |
| Electrical Power | To power the avionics, cabin and aircraft lighting, galleys, and other commercial loads | Lower power density than hydraulic power; Higher risk of fire |

## 2.3 More Electric Aircraft

Generally, the MEA is an aircraft whose majority secondary power systems (not all these systems) are powered by the electricity.

With the development of power electronic interfaces and devices in recent years, the concept of MEA has been espoused. The Vickers Valiant V-Bomber adopted a great many electrical units and so did the Bristol Brabazon. Over all the following years all kinds of debates were taking place with regard to the merits and drawbacks of the electrical power versus other types power, such as hydraulic, pneumatic or mechanical ones [9].

Over the past decades, a great deal examination on the value of MEA has been promoted by a good many aeronautic institutes in the United States. In the early 1980's the Integrated Digital Electrical Airplane (IDEA) research was funded by NASA. The main aim of the IDEA concept studies was to develop the technologies to enhance the performance of a 250–300 seats substitute for some kind of aircraft just like the Lockheed L1011. Some research achievements have already been underway or have been involved in some chief civil aircraft programs as proved by systems on B787 and A380 [9-12].

The main distinctions between the MEA and the conventional aircraft are as

follows:

a) Eliminate bleed air off-take

b) Electric start of the engine

c) Enhanced power generation capacity

Since the early 1990s, a great deal of research on aircraft power system technologies has been carried out so as to eliminate or reduce the centralised hydraulic system on board and substitute them with electrical power. A good many programs or projects have been carried on with the purpose of prompting the investigation on this area [3, 13]. The main research programs are as follows:

a) Totally Integrated More Electric Systems (TIMES): This project mainly dedicated to utilizing preveniently developed systems into the MEA.

b) US Air Force MEA Program: This program basically dedicated on providing much more electrical capacity for the combat aircraft.

c) Power Optimized Aircraft (POA) Program: This program made an attempt at optimizing the managing and control of the electrical power onboard to reduce or eliminate the non-propulsive power. Thus the reliability and safety of airframe systems will be enhanced, and the fuel consumption can be reduced, as well as the whole lifecycle costs.

In recent years, novel power generation, power distribution, and power utilization technologies on aircraft have been investigated on aircraft level. More Electric Engine (MEE), Variable frequency generators, mixed or even bleed-less air conditioning system, All-Electric IPS, EMA&EHA, distributed system architectures and complex embedded digital systems are all striving for spaces of themselves on forthcoming advanced aircraft [9, 13]. Nowadays, more advanced approaches on drive systems and power management are being studied, which could be used in future commercial aircraft (Figure 2-4). It is reported that the electrical power has far more potential for future

applications than conventional secondary power with a view to energy efficiency.

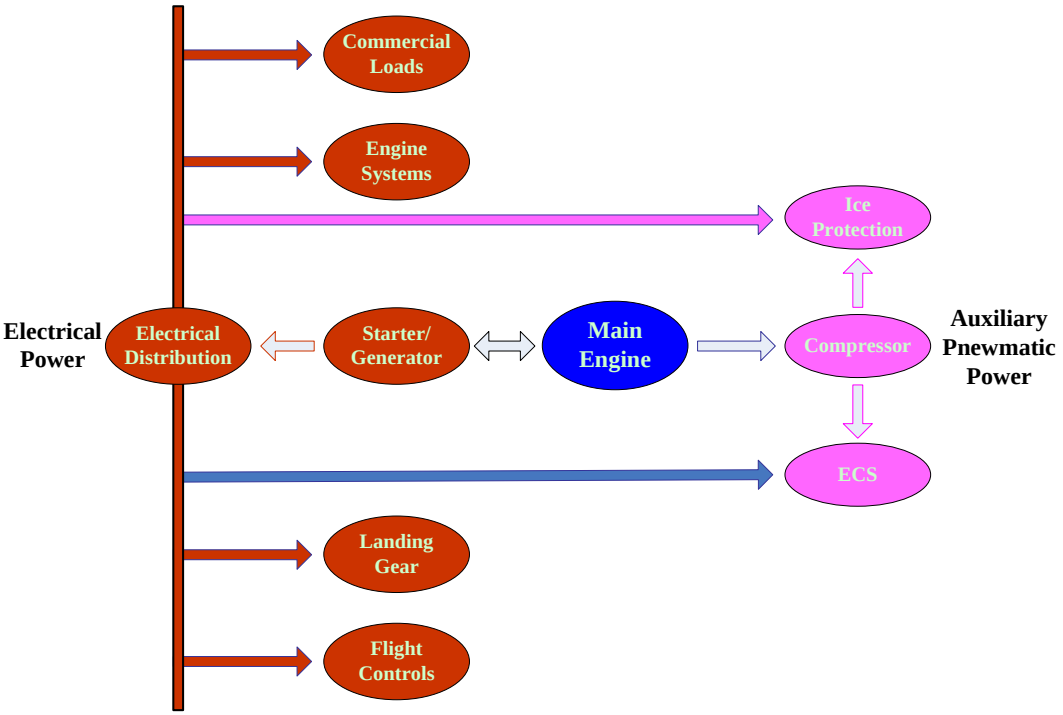


**Figure 2- 4 MEA Power Distribution Schematic [3]**

In traditional aircraft, the airframe systems are driven by several different kinds of power, such as electrical, pneumatic, hydraulic and mechanical power. But now it is predicted that the prime trend is the increasing use of electrical power in MEA power systems [11].

## 2.4 More-Electric Engine

Within the aeronautic domain, the European funded MEA/MEE technology research program named the POA has been in progress for a great many years, which embraces the more electric concept at the aircraft level [9, 14]. The summit of this program was the ground demonstration and running of a MEE in an engine chamber in Spain in late 2006. The top-the-line comparison between the traditional engine and the MEE is demonstrated in Figure 2-5.

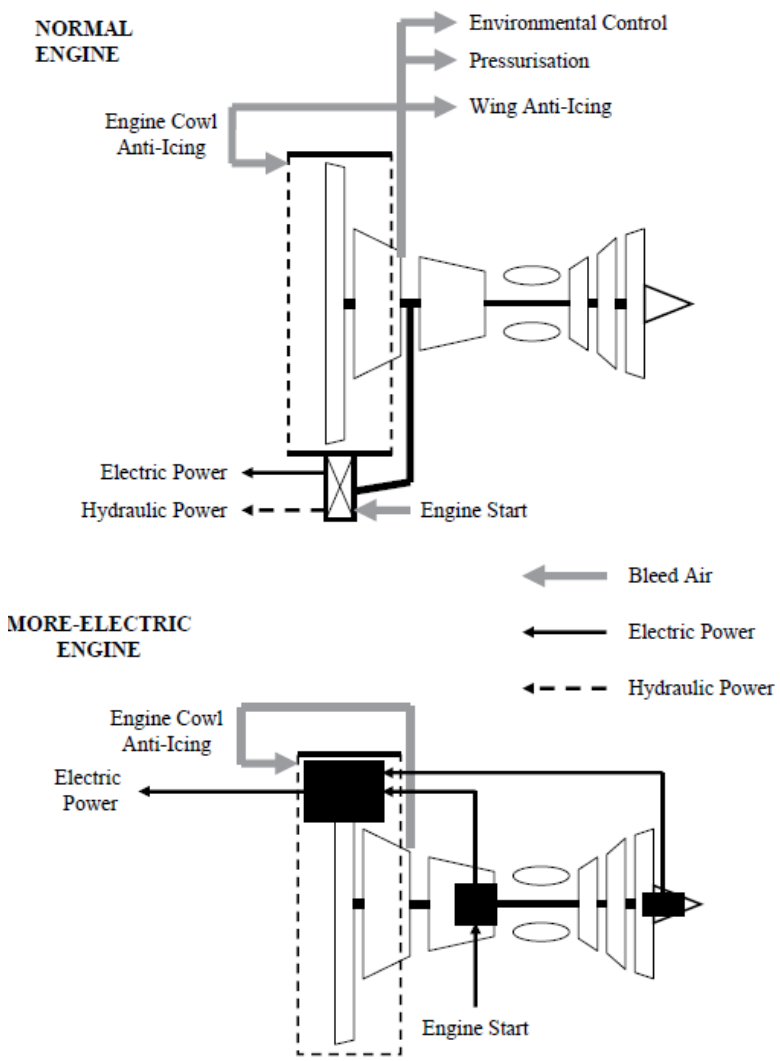


**Figure 2- 5 Comparison of Conventional Aircraft and MEE [9]**

The main differences between the MEE and the traditional configuration are as follows:

a) Electric engine start. The MEA will use the electric start because the bleed air is eliminated [9].

b) Elimination of bleed air off-take. The unique bleed air off-take on B787 is for the anti-icing of engine cowl. While in a real AEA, the engine cowl anti-icing system will only use the electrical power, therefore the bleed air off-take will be needless [6, 9].

c) Elimination of the accessory gearbox. The engine accessory gearbox was getting much more complicated because of the ever-growing quantity of drive devices and power off-takes [9].

d) Ever-increasing electrical power generation capacity. The generation system of B787 produces 500kVA each channel rather than 120kVA (A320 or B767). This added electrical power is mainly used to supply enough power to the airframe systems which will be no longer supplied by bleed air, such as the ECS and IPS [6, 9].

In conclusion, the removal of the bleed air system, the accessory gearbox and the pneumatic engine starting system will contribute to a dramatic mass reduction and much higher efficiency [2, 11, 15]. Therefore, with the purpose of realizing the all electric aircraft application, the primary power generation system must adopt the more-electric or even the all-electric engines.

## 2.5 Electric Actuation

Different from the centralised hydraulic actuation which is kept being energized during the entire flight- leading to continuous power dissipation, the electric actuation just draws the power proportional to the load requirements [16]. One thing needs to highlight is that some larger consumers of hydraulic power, for instance the secondary flight control system (FCS) and the landing gear (LG) system, use this type of power for only a shot period.

The mechanical complexity of the braking system has been reduced significantly due to the changing from the centralised hydraulically actuated braking system to the electric braking system, and the potential delays has been eliminated, also. These features have been successfully utilised on the B787 aircraft, which adopts four electric brake actuators (EBA) on per wheel and can dispatch under the condition of one EBA inoperative without suffering from significantly reducing the performance penalties, comparing with the dispatch of the aircraft with the hydraulic brake system having a failure present [17].

The tests on the electric systems usually illustrate the possibility of cost reduction. The utilization of electrical systems with optimized energy

consumption also increases the whole aircraft performance [18].

The concept of using the electrical power to drive the aircraft flight control surfaces is called “Power-By-Wire (PBW)”. The PBW actuation devices are line-removable by using only electrical and mechanical interfaces with the aircraft [19]. The PBW actuators are self-governed and are remotely installed on the flight control system (FCS), which makes them have a smaller exposed area and reduces the probability of damage.

There are mainly two different electrical actuation systems: the Electro-hydrostatic Actuation (EHA) and the Electromechanical Actuation (EMA).

The EMA usually directly drives the actuator by using an electric motor. While the EHA drives a hydraulic pump through an electric motor firstly, then the hydraulic pump drives the corresponding actuator [20].

The EMA combines with a motor powered by electricity to control the flight control surfaces by using the mechanical drive. The DC electrical power is needed by the motor. The speed, torque and direction of the motor are translated into the speed, load and direction of actuation. Because the EMA is easily influenced by various single point failures which can bring about the mechanical jam, it is not suitable for the primary flight control system. The jam tendency can be lessened due to the utilization of additional components, but this will lead to other disadvantages, such as increased complexity, weight, cost, and so on. However, the EMA can be used in secondary flight control surface actuation system due to its less stringent certification requirements [21].

There two types of EHA, one is driven by hydraulic pump and the other is driven by electrical motor. The first one, also the traditional one, uses a fixed displacement pump and variable speed motor as is illustrated in figure 2-6. The second one adopts a variable displacement pump and constant speed

motor, which is called the Integrated Actuator Package (IAP), as is illustrated in figure 2-7.

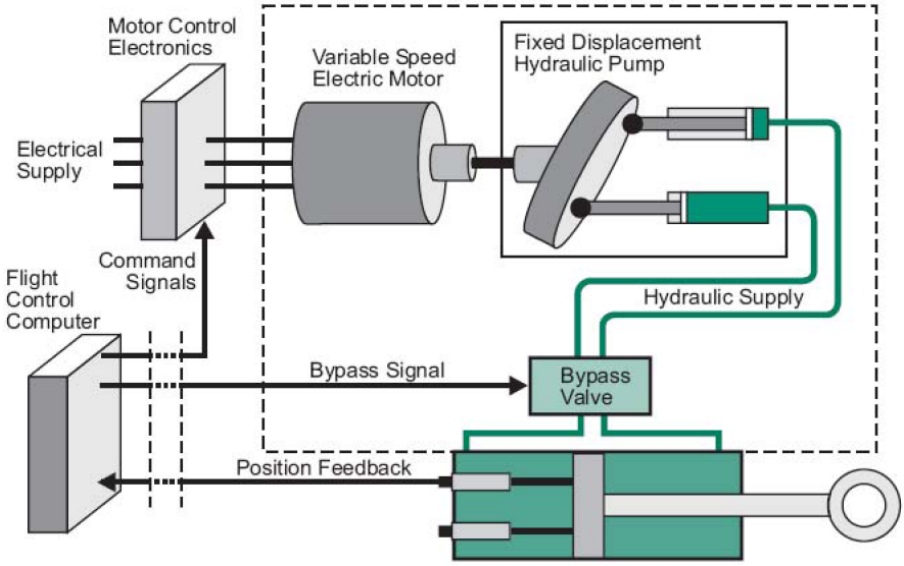


**Figure 2- 6 Plan of EHA [22]**

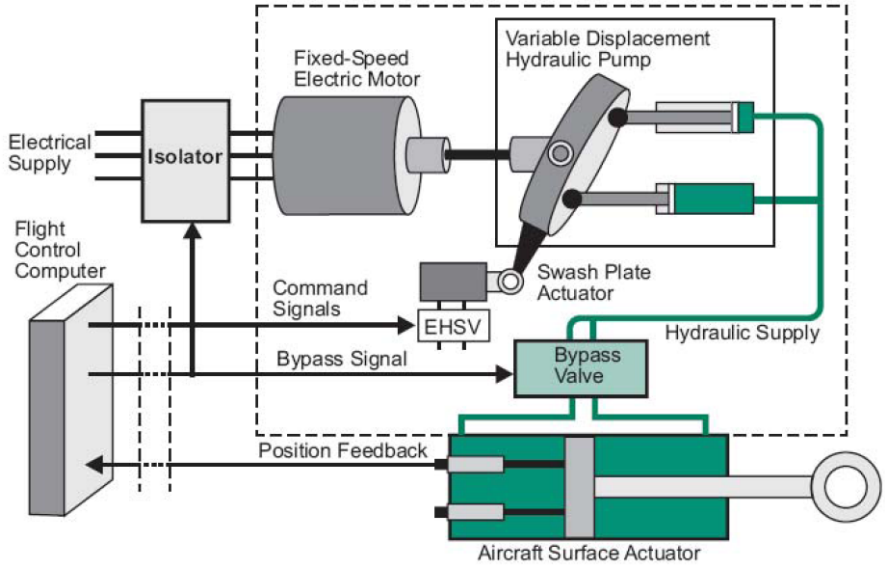


**Figure 2- 7 Plan of IAP [22]**

In the early 1950s, the Vulcan bomber of the RAF applied the electro-hydraulic -powered flight control system which led to a revolutionary research of today's EHA. Since 1993-1994 and 2000 respectively the Airbus has studied on the EHA flight control technologies on the flight test beds of A320 and A340 series [21]. It is the Joint Strike Fighter (JSF) which firstly employs EHA on all its control surfaces.

The EHA uses the standard hydraulic bypass valves to assure that the conventional active-standby, or active-active actuator architectures can be easily utilised. Thus the EHA can resemble closely to the traditional centralised hydraulic actuators in running. Therefore, the EHA is much more appropriate for the primary flight control application instead of the EMA. The EHA techniques make the quiescent power consumption lower during the standby operation. Also the EHA can achieve a rapid start-up response time by using the highly efficient electrical system due to the PBW feature of itself.

The conventional hydraulic actuators have a lower efficiency (typically max 50%) than that of EHA (typically 50%-70%). The single mode failure vulnerability of the EHA is lower compared with the hydraulic actuators. Moreover, it is easy to integrate several sub-systems into one single system for the EHA, which contributes to a higher modularity and easier modification, and then reduces the maintenance costs.

Compared with the EMA, the greatest advantage of IAP and EHA is their jam-proof [22]. However, the EMA has its own strong points. Firstly, the traditional hydraulic fluid has been cancelled entirely. Furthermore, the simplex electrically driven actuator (EMA) contributes to a significant reduction of maintenance and cost, and makes the whole system much simpler. Therefore, the EMA may be the trend in technology development.

To sum up, from the view of the aircraft level, much more benefits can be achieved on account of the removal of the traditional centralised hydraulic system and the accessory gearbox. Firstly, the electrical actuation system using the electric power and removing the accessory gear box, central reservoir and all the pipes, reduces a great deal of mass. Moreover, actuators powered by electricity could be activated on command, which can save much energy. Finally, the control and powered wires are so flexible that the actuators are easily routed in manufacturing, and the maintenance becomes easier, also.

## 2.6 All-Eletric Aircraft

In general, the All Electric Aircraft is a unique aircraft on which all the secondary power systems are powered by the electrical power, with all the hydraulic source, pneumatic system, and Aircraft Mounted Accessory Drive (AMAD) being eliminated.

In the 1990s the MEA caught more and more attention, while the future is caught by the AEA. In the AEA, the pneumatic, hydraulic and mechanical power will be eliminated completely, and a total electrical starter/generator will be integrated into the propulsion engine's turbine core. In Lockheed's 'all-electric airplane' studies, it was found that electrically driven compressors provided a 3-4% fuel advantage over engine-bleed systems (using the main-engine compressors) [23].

As an alternative to engine driven pumps, a great many of aircraft, for instance the VC-IO, the Lockheed Electra and the Lockheed P-3, have used electric motor-driven pumps.

Hydraulic power is used extensively in almost all aircraft today for the 'muscle' or actuator functions of many large loads, such as the landing gear, nose-wheel steering, braking, cabin doors and for the more esoteric functions such as swing wings/ swing tails.

By using only one power source: the electrical power, the all-electric aircraft can remarkably reduce the complexity, weight and whole lifecycle costs of aircraft [2, 70], because of the elimination of the accessory gearbox and the bleed air from engines. At the same time, the reliability, safety and maintainability also increase with the simplified lesser amount of ground support equipments and the number of components in operation decreases [10, 23].

In order to make sure the AEA to come true, the following three crucial

technologies need to be achieved:

a) the all electric engine

b) the electrical actuation

c) the fault tolerant power distribution and dynamic load management.

All these technologies are clinging to the acquirability of the power electronics to a great extent.

## 2.7 Development on Electrical Power System

The electrical power generation system supplies all the electrical consumers with enough electrical power on the aircraft. There have two main types of power in power generation, the first one is Direct Current (DC) power and the other one is Alternating Current (AC) power.

The electrical power system of aircraft has made dramatic progress in recent years because the aircraft has depended more and more on the electricity. The twin 28VDC system was the classical electrical power system from 1940s to 1950s [24]. There were one or two DC batteries to support the essential loads during emergency occasion. An inverter was also adopted to provide 115VAC power to the flight instruments [24].

Along with the increasing power requirements, especially incorporated electrically actuated landing gear on the Vickers Valiant, the type of electrical power generation system changed. Four 115VAC generators were fitted on the V-bombers, one of which was driven by each engine. As a criterion of the nominal power produced, the Victor bomber was assembled with four 73kVA AC generators. The Nimrod maritime patrol aircraft was assembled with four 60kVA generators. The McDonnell Douglas F-4 Phantom brought forward the high voltage AC generation application to a fighter plane [24]. And now the 270V or 540V high voltage DC power generation systems have been used in

some MEA. Along with the time, the electrical power system has evolved in the types and power capacity (illustrated in Figure 2-8).

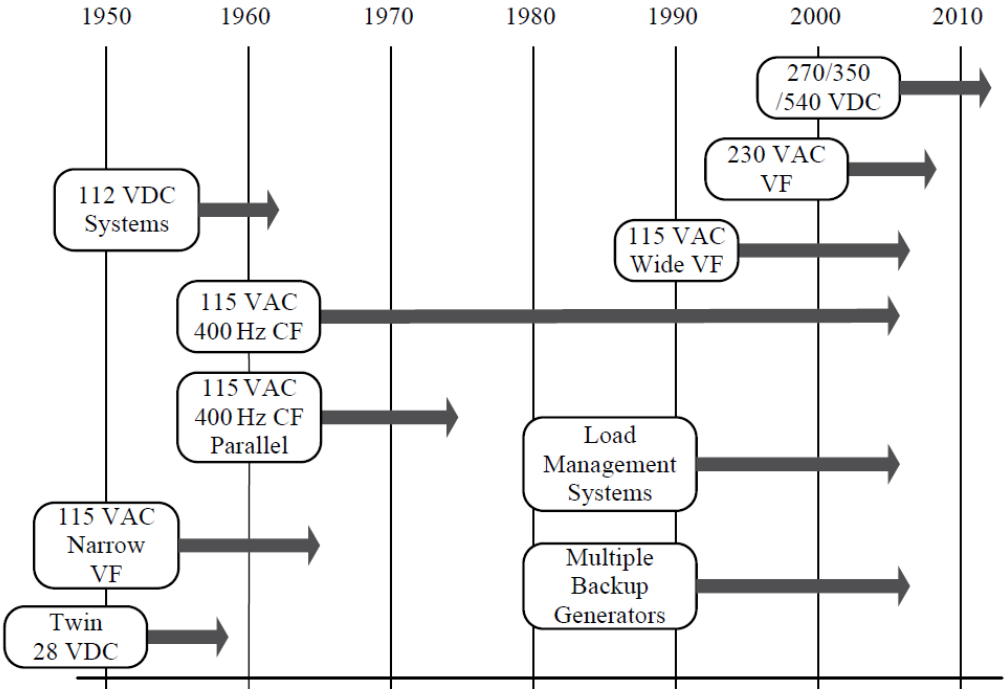


**Figure 2- 8 Electrical System Evolution [24]**

There are various generators utilized on current aircraft. Table 2-2 lists some of the current aircraft along with their power capacity and types.

**Table 2- 2 Common Types of Power Generation [19]**

| Generation Type | Civil Application | | Military Application | |
|---|---|---|---|---|
| IDG/CF [115VAC/400Hz] | B777 | 2×120kVA | | |
| | A340 | 4×90kVA | | |
| | B737NG | 2×90kVA | | |
| | MD-12 | 4×120kVA | | |
| | B747-X | 4×120kVA | | |
| | B717 | 2×40kVA | | |
| | B767-400 | 2×120kVA | | |
| | Do728 | 2×40kVA | | |
| VSCF (Cycloconverter) [115VAC/400Hz] | | | F-18E/F | 2×60/65kVA |
| VSCF (DC Link) [115VAC/400Hz] | B777(Backup) | 2×20kVA | | |
| | MD-90 | 2×75kVA | | |
| VF [115VAC/380-760Hz Typical] | Global Ex | 4×50kVA | Boeing JSF[X-32A/B/C] | 2×50kVA |
| | Horizon | 2×20/25kVA | | |
| | A3XX | 4×150kVA | | |
| 270VDC | | | F-22 Raptor | 2×70kW |
| | | | JSF[X-35A/B/C] | 2×50kW |

(1) Integrated Drive Generator (IDG)

The IDG is widely used in all kinds of aircraft nowadays. The techniques of it are adequately mature. Nevertheless, the IDG has its own obvious disadvantage. It needs the hydraulic equipment-Constant Speed Drive (CSD) to change the mutative speed from the engine shaft to the invariable speed, which makes the whole generation equipment much heavier and more complex.

(2) Variable Speed Constant Frequency (VSCF)

The VSCF generators supply 115V, 400Hz CF electrical power to airframe systems via the conversion of power electronics. There are two types of VSCF-Cycloconverter and DC Link. The first one has been successfully used on the military aircraft F-18E/F, while the second one has been widely used on the commercial aircraft, such as B737 and B777.

(3) Variable Frequency (VF)

The VF generator can be driven by the engine directly and can supply the variable frequency (generally 380~760Hz) power to airframe systems without the help of complex mechanical conversion equipments. The main advantages of the VF technology are: cost saving, weight reducing and reliability improving. However the disadvantages of the VF generator are also obvious. Many AC equipments cannot work normally and steadily under VF power generation because of the frequency mismatch. Therefore some regulation methods need to be adopted. Coupled with the process of power electronics, this problem becomes nothing. Four 250kVA VF generators have been utilized on B787 as the main electrical power sources.

(4) 270VDC

For the sake of reducing the mass of wires and conduction loss of electrical power, the high voltage generation technology has been used to provide the electric power. The 230V AC, 270VDC and ± 540VDC techniques have been used on B787 which is a famous MEA [25].

In the EPS of aircraft, different loads require different power supplies from the main generators. Take the B787 for an instance. The primary power supply from the main engines is 230V VF power, certain loads are adopted which need 115 VAC, 28 VDC or 270/540 VDC power in operation. Consequently, the multi-voltage level mixed AC and DC systems will have to be employed in the EPS of future aircraft. Consequently, it is necessary to adopt various electronic power converters, such as AC to DC rectifiers, DC to DC converters, and DC to AC inverters, not only to transform electrical power from one type to another, but also to transform the power to a lower or higher voltage level. Moreover, in the VSCF application the solid-state bi-directional converters are utilised to regulate the VF power into a constant frequency (CF) and fixed

voltage power. The bi-directional DC to DC converters are also adopted in battery charge/discharge devices. Accordingly, the EPDS of MEA/AEA is mainly a multi-converter power electronics system. The miscellaneous dynamic interactions in future electrical power system are inevitable because of the extensive interconnection between various components and devices [11].

In the power distribution system, loads can be managed by the intellective remote modules. Consequently the length and weight of wires on aircraft can be reduced significantly. Moreover, a Power Management System (PMS) can be employed by connecting all the remote modules via the control/data busses, such as the B777 which is the first aircraft employing the PMS. The most important feature of the PMS is to adjust the duty-cycle of electrical consumers to reduce the maximum power requirements [11, 26]. The PMS also has some other significant functions, such as load control and management, source reconstruction and management, starter/generator system management, and high integrity supply system control, and so on.

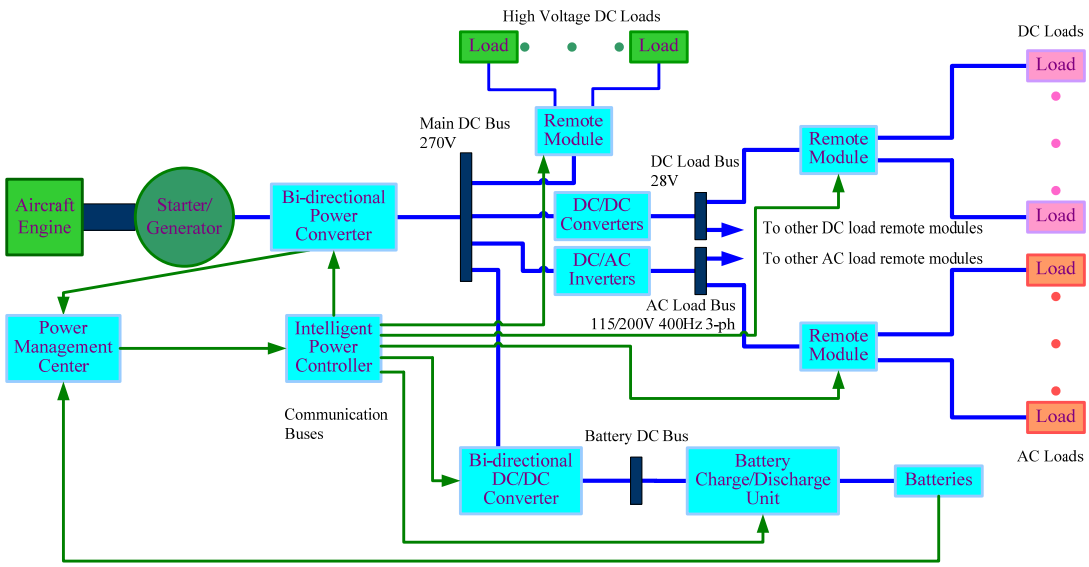


**Figure 2- 9 Advanced Aircraft EPS Architecture of Future [11]**

Figure 2-9 illustrates the distribution control network of the advanced aircraft EPS of the future. There are some other advantages with the intelligent power

management as follows:

a) All the loads are under intellective management and control, thus power management characteristics can be integrated into the subsistent controls conveniently.

b) Power management method can contribute to a significant reduction of the size and weight of generations including batteries.

c) Enhanced performance with little increase in cost and complexity can be achieved due to the communications inherent with networked aircraft systems.

Moreover, the EPS can be easily transformed from DC power to AC power. Convenient conversion to various voltage amplitudes by converters is the outstanding advantage of the AC power distribution system. And the AC machines can be used simply and easily.

## 2.8 SSPC Technology

In the AEA, pneumatics, hydraulics and mechanics systems will be replaced by the electrical ones. All these changes will provide higher efficiency, lower maintenance, better performance and lower life cycle costs [3, 27-30]. Most importantly, the Power Electronic equipments play an important role in the new Power Distribution Systems (PDS) because the electrical power transferred to the loads has been processed almost three times [27, 31].

In the electrical power system, the protection devices play an essential and important role by protecting the cables and the onboard equipments. Till today, the Circuit Breaker (CB) is still the most frequently-used wire protection device in the 115V AC and 28V DC architectures of the aircraft PDS. But it is regrettable that the CB cannot detect the arc failure because of its short duration time. This issue increases the temperature inside the area close to

the arc, which could cause catastrophic damages to the wires, and provoking ignition of isolating material or fuel close to the arc fault. In some cases, despite of the damaged wire, the upstream of CB was still intact [27, 32, 33]. Moreover, it needs to highlight the CBs are not appropriate to protecting the novel system due to their poor characteristics at high DC voltage [33]. In addition, most importantly the monitoring of CBs is difficult and complicated, and some other monitoring units are required when the CBs are not fixed on cabin. Therefore, additional devices and weight are added in the aircraft. Moreover, the CBs do not have the ability of remote control.

With the development of solid state power control and packaging technology, to solve the disadvantages of the protection equipments described above, the solid state power controller (SSPC) based on power semiconductors, such as IGBT [34] and MOSFET [35], starts to excite more and more attention in the last few years.

In 1992, the first commercial SSPC was designed and produced by DDC®. These novel equipments were recommended especially for the application on the MEA because of their ability of working under 28V DC and 270V DC voltage level, for a maximum current ranges from 15A to 25A respectively [36].

The SSPC cannot only connect the loads to the power buses, but also protect the electric devices from short circuit and overloads. In addition, because the SSPC enabled by power electronics can afford instantaneous faults handling capability and current squared time protection ($I^2t$) to protect the wires from over current conditions, equally as is performed by a CB, the electrical power system will be more reliable and safer than before. Some other SSPC features are remote control by means of software, lower power dissipation, faster response and lower susceptibility to vibrations. All these benefits and features are due to the rapid development of microelectronics and power electronics [34-40]. Figure 2-10 shows the $I^2t$ trip curve in a typical SSPC.

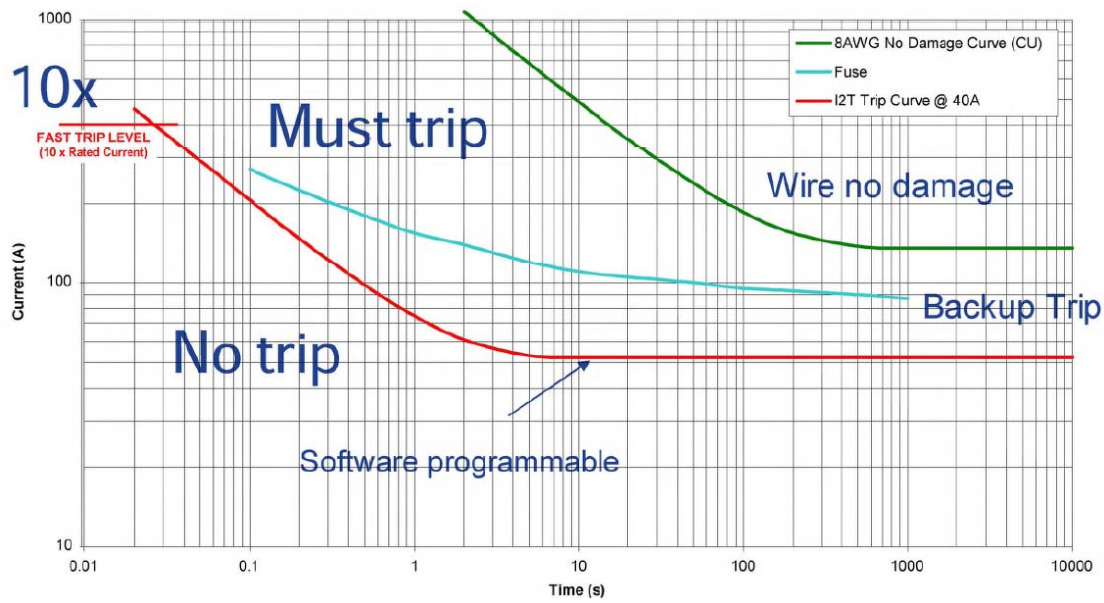


**Figure 2- 10 SSPC Current Squared Time Curve [12]**

The PDS control and wire-harness protection are improved significantly due to the application of SSPC technology. It is also remarkable that the SSPC can be grouped inside a module because of their small size as shown in Figure 2-11.

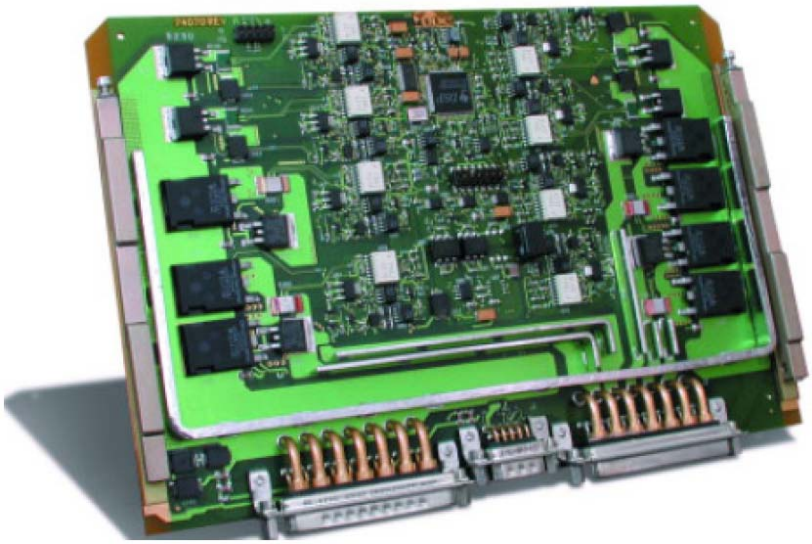

**Figure 2- 11 A SSPC Module Manufactured by DDC ® [27]**

This device can be located in a suitable area near the onboard system, close to the loads. It can get power from the main DC bus bars with the help of a big gauge and a long wire. Then the electrical power is transferred to the corresponding loads via much shorter and smaller wires. In consequence, the

secondary power distribution system may provide electrical power to the loads just with shorter wires and lower gauge by using the SSPC. This can reduce the volume and mass of the wires in comparison with other types of protection equipments.

In one word, the SSPC has a great many of advantages compared with other protection devices, and the SSPC will be used widely on future aircraft, especially the MEA and AEA.

## 2.9 Health Management of EPS

The EPS not only provide electrical power to the non-essential loads such as galley appliance and entertainment devices on board, but also power the vital loads for safe flight, like flight control system. Therefore, it is extremely important to detect and analyse the operational status of EPS during all the flight phases and operating conditions. So the Diagnostic, Prognostic and Health Management (DPHM) technology is thought over during the design of EPDS. By using the DPHM in EPS, the system reliability can be improved significantly. During the research process, the health management of EPS will be given the due consideration.

## 2.10 Conclusion

This part mainly describes the history and development of EPDS. The MEA and AEA concepts are also presented. The features of MEE, electric actuation and the SSPC are investigated. In addition, the health management of EPS is mentioned too. The number of electrical power consumers is increasing along with the development of electrical and electronics techniques. Therefore how to manage so many electrical loads is becoming more and more important. In next chapter, different power management methods of various commercial aircraft, such as A320 and B777, will be analysed.

# 3 Different Power Management Methods

In order to develop an advanced power distribution management method, it is necessary to compare the existing other power management methods on previous aircraft, such as A320 and B777. To acquire as much as possible information of the existing management strategy on these aircraft, much more attention is paid on investigating the architecture of EPS, the operation of EPS, the load shedding method and system reconstruct technologies. Nevertheless, detailed design data cannot be obtained due to confidence principle. In this chapter, the designer would like to seek after the operational theory of the A320, B777 and one AEA EPS as detailed as possible.

## 3.1 Power Management of A320

The EPS of A320 includes a three-phase 115/200V 400Hz constant-frequency AC system and a 28V DC system. The electrical transients are acceptable for all equipments.

In normal operation, the EPS produces the alternating current, some of which then is transformed into the direct current for certain applications. Each of the aircraft's three generators (two main generators and an APU generator) can provide enough power for the entire network. If all normal AC generators are lost, an emergency generator - the Ram Air Turbine (RAT) can supply AC power for the essential loads. If all AC generators are lost, the EPS can transform DC power from the batteries into AC power to provide power for the vital loads for a safe landing [41].

The electrical power system architecture of A320 is shown in Figure3-1.

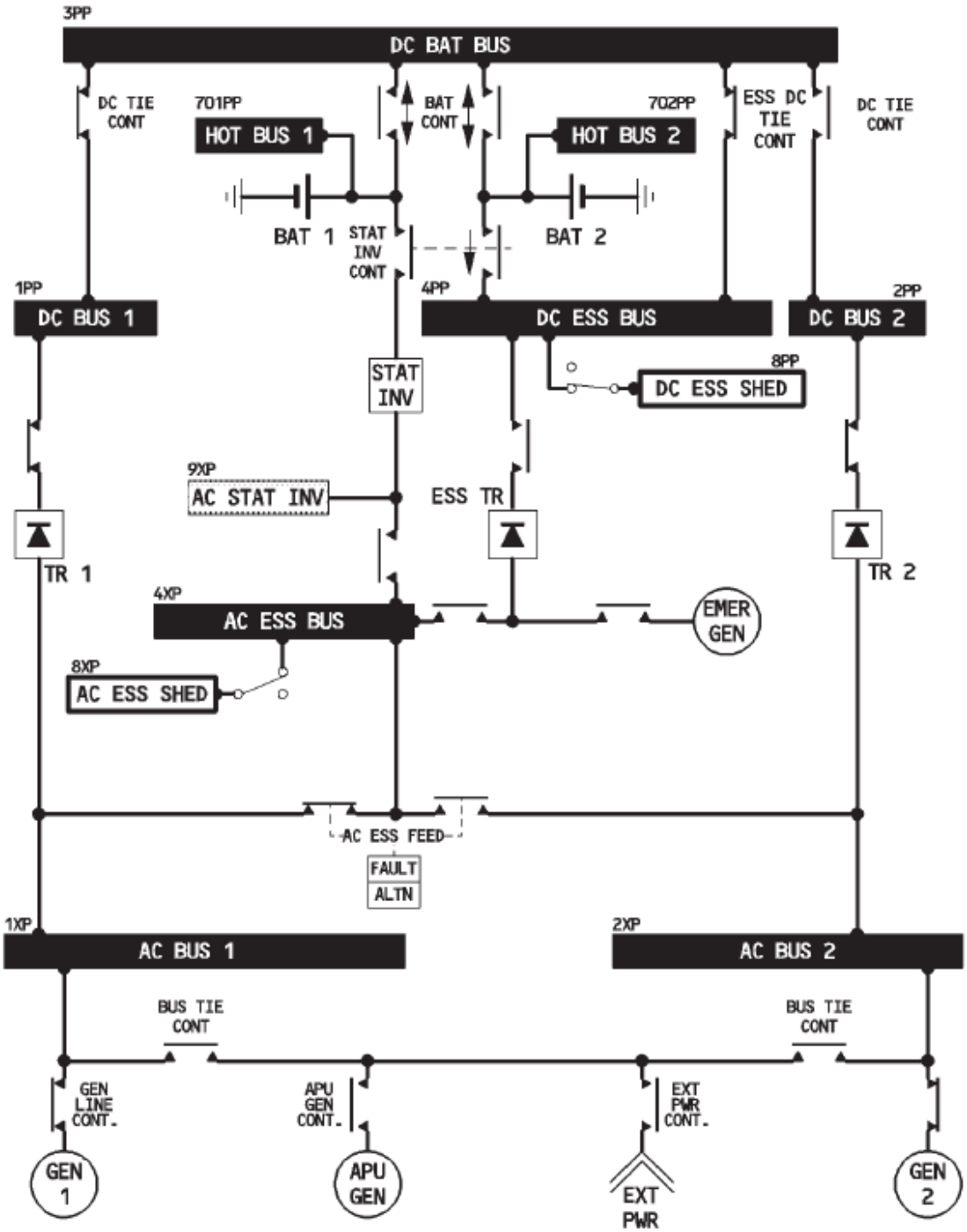


**Figure 3- 1 Electrical Power System Architecture of A320 [41]**

The main parameters of the EPS are as follows:

a) Main engine generator: IDG, 3 Phases, 115/200V, 400Hz, 90KVA

b) APU: 3 Phases, 115/200V 400Hz, 90KVA

c) EXT Power: 3 Phases, 115/200V 400Hz

d) RAT: Single Phase, 115/200V 400Hz, 5kVA

e) Static Inverter: Single Phase, 115V 400Hz，1kVA

f) Transformer Rectifiers: 28V 200A

g) Battery: 28V, 23Ah

### 3.1.1 Main Generators and APU Generator

There are two 3-phase AC generators (GEN1, GEN2) on A320, one driven by each main engine through an integrated drive method. Each generator can provide up to 90kVA electrical power at 115/200V and 400Hz.

The Auxiliary Power Unit Generator (APU GEN) is driven directly by the APU and can provide the same electrical power as the main generators, and can act as the substitution of either or both main generators at any time for safe landing.

A Generator Control Unit (GCU) can respectively control the output of each generator. The primary functions of GCU are as follows:

a) Control and regulate the frequency and voltage of the GEN output

b) Protect the power network by controlling the associated Generator Line Contactor (GLC)

### 3.1.2 External Power

The Ground Power provides 3-phase, 115/200V, 400Hz electrical power for specially appointed aircraft systems, while other systems will not be powered. A Ground Power Control Unit (GPCU) can provide protection for the network by controlling the external power contactor.

### 3.1.3 Emergency Generator

When both main generators and APU generator fail, the blue hydraulic circuit drives an emergency generator which can automatically provide emergency AC power for the aircraft electrical system. This generator can produce 5kVA of 3-phase 115/200V 400Hz electrical power. There is a corresponding GCU to perform the following functions:

a) Regulates the emergency generator at a constant speed

b) Regulates the output voltage of the generator

c) Controls the emergency generator line contactor to protect the network

d) Control the start-up of the emergency generator

### 3.1.4 Static Inverter

The static inverter transforms 28V DC power from Battery1 into 1kVA of single-phase 115V 400Hz electrical power, which is then transferred to the AC essential bus. If only the batteries are providing electrical power to the aircraft, disregarding the pushbutton positions of the BAT1 and BAT2, when the speed of the aircraft is above 50 knots, the inverter will be automatically activated. When the speed of the aircraft is below 50 knots, if only the batteries are providing electrical power to the aircraft, and the BAT1 and BAT2 pushbuttons are both on at auto position, the inverter will also be activated.

### 3.1.5 Transformer Rectifiers

There are two transformer rectifiers, TR1 and TR2, to provide up to 200A of 28V DC power for the electrical system on board.

When the main engine generators and the APU generator all fail, of if either TR1 of TR2 fails, the ESS TR can supply the essential DC network from the

emergency generator. Every TR can control its own contactor by internal logic.

### 3.1.6 Batteries

There are two main batteries, each one with a normal capacity of 23Ah. Both of them are permanently connected to the two corresponding buses.

Each battery has an associated Battery Charge Limiter (BCL) to detect the charging status and to control the battery contactor.

### 3.1.7 Power Distribution

In operation GEN1 and GEN2 have the priority over the APU generator and over the EXT Power. The EXT Power has the priority over the APU generator if the EXT PWR pushbutton switch is at on position. The APU generator or the EXT power can power the entire network. One engine generator can supply the entire network. These generators cannot be connected in parallel.

Via the generator line contactors (GLC1 and GLC2), each generator can provide power for its associated AC BUS (AC BUS1 and AC BUS2). The AC BUS1 normally powers the AC ESS BUS via a contactor. AC BUS1 and AC BUS2 supply power to TR1 and TR2, then TR1 and TR2 regulate AC power into DC power. TR1 normally powers DC BUS1, DC BAT BUS, and DC ESS BUS during normal operation, while TR2 normally powers DC BUS2. If TR1 fails, TR2 will power the loads powered by TR1 and restore the power to DC ESS BUS. AC ESS BUS provides electrical power to the ESS TR and the AC ESS SHED BUS. The ESS TR supply DC ESS BUS with DC electrical power, and then provide power to DC ESS SHED BUS. If both AC BUS1 and AC BUS2 lose, the CSM/G will power AC ESS BUS and the ESS TR. Two batteries supply DC BAT BUS electrical power. When the two batteries need charging, they will be connected to the DC BAT BUS. They will be disconnected by the battery charge limiter if they are fully charged. Moreover,

BAT1 and BAT2 will also provide DC power to HOT BUS1. BAT2 also supplies DC ESS BUS in typical condition. STAT INV gets power from BAT1.

Detailed analysis could not be performed due to the limited information and confidential reason.

### 3.1.8 Discussion

As to the AC power management, when on the ground, the EXT power supplies the electrical power to the aircraft equipments. If the EXT power is unavailable, the APU generator will be started to power the ground service bus. During the normal flight, the main engine generators will operate as the preferred power sources to supply the whole aircraft. If one main generator fails, the APU generator will be started to substitute the failed generator to power the main AC BUS. If both main engine generators fail, the APU alone can power both main AC busses to provide enough power to all the essential loads. When all main generators fail, the CSM/G powered by RAT will be deployed to power the AC ESS BUS and ESS TR. Two batteries will provide electrical power to DC BAT BUS and Static Inverter if all the AC power sources mentioned above fail. The Static Inverter transforms the 28V DC power to 115V single-phase 400Hz power and powers the AC ESS BUS. The AC ESS BUS is normally powered by the AC BUS1. The AC ESS BUS can get power from AC BUS2 when AC BUS1 is unavailable.

With regard to the DC power management, TR1 and TR2 regulate the 115V AC power from AC BUS1 and AC BUS2 to 28V DC power, and then power the DC BUS1 and DC BUS2 respectively. In normal operation, DC BUS1 supplies power to DC BAT BUS, and then DC BAT BUS powers DC ESS BUS. DC BUS2 will supply power to DC BAT BUS if DC BUS1 is unavailable. IF both DC BUS1 and DC BUS2 are unavailable at the same time, the ESS TR powered by the CSM/G, will power the DC ESS BUS. The DC ESS SHED BUS

powered by DC ESS BUS and the AC ESS SHED BUS powered by AC ESS BUS, will be connected to the network only when the RAT comes into operation. In normal operation, the loads connected to the AC ESS SHED BUS and the DC ESS SHED BUS cannot be in operation.

The electrical power distribution system of A320 is a traditional centralised one. Its load management method is not complicated. The only advantage of the centralised power distribution architecture may be its maturity because of many years' development and verification. Compared with the distributed power distribution architecture, the disadvantages of the centralised power distribution system are obvious. The power control units are invariably located in the avionics bay. The main power feeders have to come through the avionics bay to all the loads located allover the aircraft. The wires collecting the status go from the loads to the avionics bay then. Therefore, the cables and wires between power sources and power consumers are very long and very heavy. The power distribution and circuit protection devices are the relays, contactors and CBs which are heavy, have no remote control function, and have no capability of providing the status. The maintenance is dramatically difficult. The most significant limitation of the power management system of A320 is that it cannot make the best use of power capacity. It cannot manage and control the power to supply the most imperative loads. Nearly all loads on board are activated and get the power when the main generators are in operation. The capacity of the power sources is determined by the summation of all loads' power requirement. The choice of cables and wires is on the basis of the maximum current flowing through them. But because not all the loads are in operation all the time, much more weight and power will be wasted.

Because of the information lack of electrical power system of A320, more in-depth research is pretty difficult to perform.

## 3.2 Power Management of B777

The EPS of B777 produces and distributes AC and DC power to the whole aircraft, and consists of two independent electrical systems, which are the main electric system and the backup electric system. The main electric system is composed of two engine-driven IDGs, a third generator driven by the APU, three GCUs, and a Bus Power Control Unit (BPCU). The backup electric system is composed of two engine-driven generators and one integrated converter/control unit. The main function of the backup electric system is to act as the redundancy of the electrical sources equivalent to a three-engine airplane. The operation of the EPS is automatic. Most importantly, the electrical faults can be detected and isolated automatically [42]. B777 is the first aircraft which adopted the Electrical Load Management System (ELMS). By using the state-of-the-art and microprocessor-based control units the automation of the system is realized. The main functions performed by these units are built-in-test, system control and circuit protection. The simplified electrical system one line diagram is shown in figure 3-2.

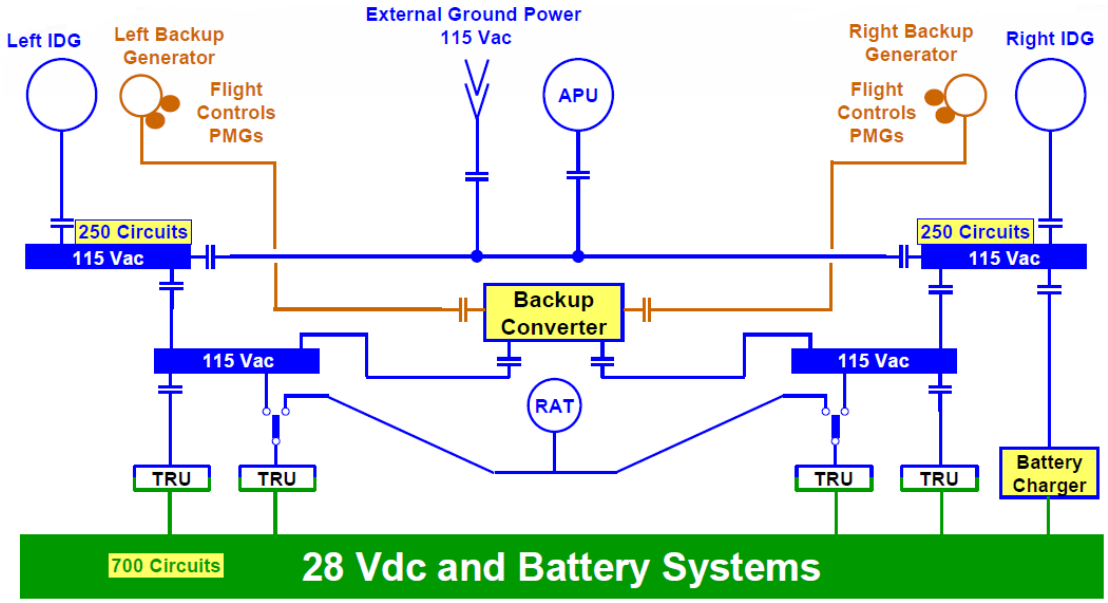


**Figure 3- 2 Simplified B777 Electrical System One Line Diagram [43]**

### 3.2.1 The Main Electrical Power System

The B777 is designed to be a large twin-engine jet airplane for extended oversea operation. Therefore, there are two kinds of separate electrical power generating sources, the main electric system and the backup electric system. The main AC electrical power sources are as follows:

a) Two Main engine generators: IDG, 3-Phases, 115/200V, 400Hz, 120KVA

b) One APU Generator: 3-Phases, 115/200V 400Hz, 120KVA

The main electric generating system is the preferred in-flight electric power source during normal operation. The main system includes two primary generators and an APU generator, all rated at 120kVA 3-phase 115/200V 400Hz. All electrical loads are distributed under the left or the right main AC buses. The two main generators can power the left and right main AC buses respectively during normal flight phases [44]. Furthermore, any one of the three main generators can provide electrical power to one or both main AC buses. On B777 the power sources are generally in operation isolated from each other. On the ground, in order to avoid the power interruption, the power sources in operation are momentarily paralleled during the power sources transfers, such as switching from the EXT power to APU generator, or from the APU generator to one main engine generator.

During normal operation, the two main generators provide electrical power to its respective main AC bus via the generator circuit breaker. The two main AC buses can be connected together by using the Bus Tie Breakers (BTBs). If one main generator fails, the BTBs will be controlled to switch on automatically, to power both main AC buses from the other main generator. When both main generators fail, the APU generator will replace the failed generators to provide electrical power to both main AC buses. When there is only one generator in operation, to avoid the overload of the IDG, the automatic load shedding will be

performed. The capacity of the IDG is enough to supply all essential loads during one-engine operation.

The APU generator has the same capacity of the main generator. The APU generator is located between the two BTBs via the Auxiliary Power Breaker (APB). If one IDG fails, the APU generator can replace this IDG and provide electric power to the respective main AC bus via the APB and corresponding BTB, even is isolated from the other IDG. Notably, the B777 can be dispatched with only one main generator in operation by using the APU generator. Vice versa, if both main generators are in operation, with the APU invalid, the aircraft can also be dispatched. If there is one IDG in fail during flight, the APU could be started to substitute the invalid IDG, but is not compulsory. Under single IDG operation, both main AC buses can remain powered, and all essential loads can get sufficient power.

### 3.2.2 The Backup Electrical Power System

Besides the main electric generating system, the B777 has a backup electric generating system, which is designed to automatically supply power to some specific airframe systems and operates independently from the main one. The main function of the backup electric generating system is to provide the equivalent redundancy of the electrical sources on B777, taking into consideration of the main system failure. When there are main EPS failures, the backup EPS can provide electrical power to some selected systems and loads, such as avionics system, flight indicator instruments, and Flight Control System (FCS).

The backup system is composed of two variable-frequency generators driven by two engines respectively, with the power capacity of 20-kVA each. Each generator contains two Permanent Magnet Generators (PMGs) to provide electrical power to the DC electrical system. The output of the backup

generators is connected to a solid state variable-speed constant-frequency (VSCF) converter to transform the VF power to constant 400 Hz electrical power. Each a time only one backup generator can supply the VSCF converter. The left and right AC transfer buses can get power from either their respective main AC bus or the VSCF backup converter. When the following conditions occur, the backup EPS will automatically supply electrical power to one or both transfer busses [42]:

a) The auto-test of the system is performed after the engine starts.

b) The power to one or both of the main AC busses is lost.

c) Only one primary AC generator of the main generators and APU generator is available.

d) Under the auto-land condition of selecting the approach mode.

There is no interruption of the power transfer in the system.

### 3.2.3 The Power Distribution System

The AC power is distributed via the left and right main AC busses and the ground service bus to the other systems.

Generally, the left IDG supplies the left main AC bus and the right IDG supplies the right main AC bus respectively. When both IDGs are unavailable, the APU generator will supply both main AC busses. If the EXT Power is connected to the network, the right main AC bus normally gets power from the primary external power and the left main AC bus normally gets power from the secondary external power.

The BUS TIE switches can control the bus tie relays to parallel or isolate the left and right main AC busses. If both BUS TIE switches are at AUTO position, the bus tie system will act automatically to supply electrical power to both main AC busses.

When on the ground, the power transfers can be performed without interruption, except the switching between the primary and secondary EXT power sources.

The power supply order for the left and right main AC busses during flight is as follows [42]:

a) Respective IDG

b) APU generator

c) Opposite IDG

The ground service bus normally gets power from the right main AC bus. The ground service bus can also get the alternate power from the APU generator or the primary EXT power. The ground service bus will provide power to the main battery and APU battery chargers, and some miscellaneous cabin and some other system loads.

The main DC power distribution is as follows:

a) The left TRU supplies DC electrical power to the left main DC bus, which then supplies a secondary DC power source for the left FCS Power Supply Assembly (PSA) and the right main DC bus.

b) The right TRU supplies DC electrical power to the right main DC bus, which then supplies a secondary DC power source for the right FCS PSA and the left main DC.

c) The C1 TRU supplies DC power to the battery bus and the captain's flight instrument bus, which provides a secondary DC power source for the center FCS PSA and the first officer's flight instrument bus.

d) The C2 TRU supplies DC power to the first officer's flight instrument bus, which provides a secondary DC power source for the captain's flight instrument bus.

### 3.2.4 Electrical Load Management System

The B777 is the first civil aircraft that adopts the load management system and the integrated EPDS [15]. Figure 3-3 depicts the B777 top-level ELMS architecture.

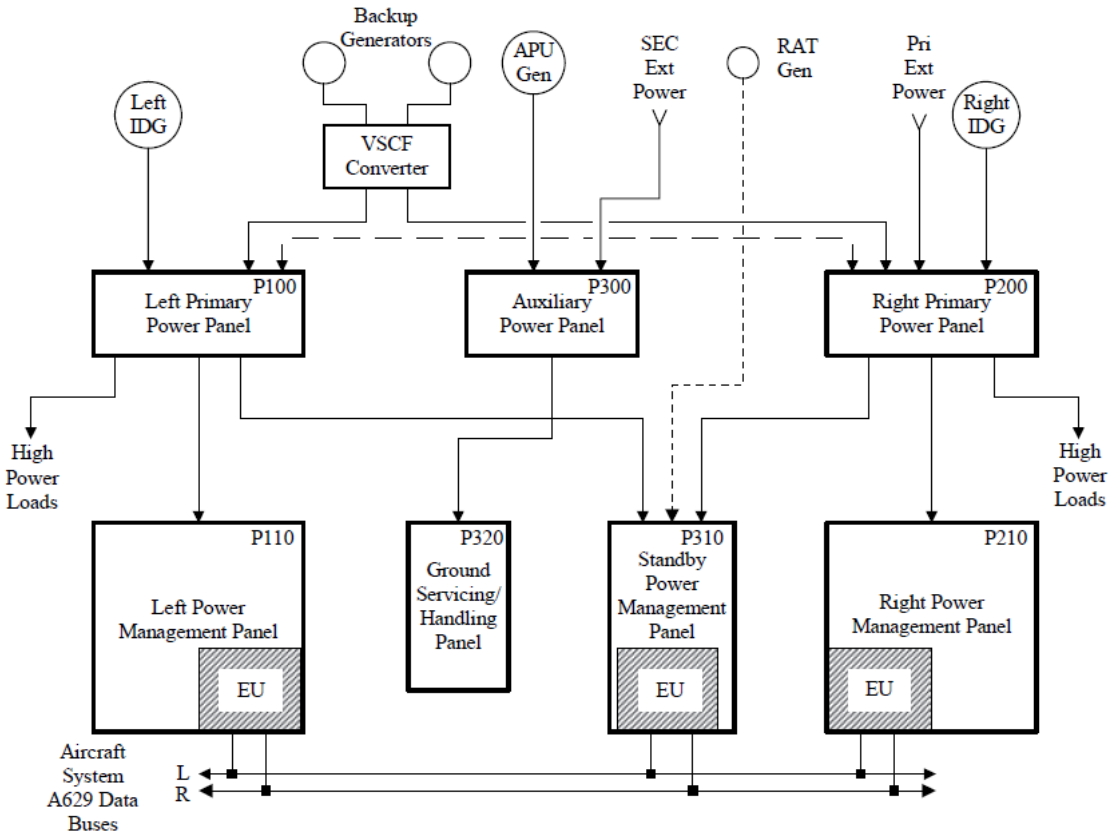


**Figure 3- 3 B777 Electrical Load Management System (ELMS) [4]**

The EPS of B777 contains seven power panels, three (P100, P200 and P300) of which are in charge of the primary power distribution, four (P110, P210, P3 10 and P320) of which perform the secondary power distribution [4]. The primary power distribution panels include P100, P200 and P300. P100, named the Left Primary Power Panel, is in charge of the distribution and protection of the left channel primary loads. P200, named the Right Primary Power Panel, takes charge of the distribution and protection of the right channel primary loads. P300, named Auxiliary Power Panel, performs the distribution and protection functions of the auxiliary primary loads [4]. The primary power panels comprise some Electronic Load Control Units (ELCUs) to perform the

control and protection function of the high power loads up to 20 Amps/phase. There are 17 to 19 ELCUs to be employed on the B777 depending on various aircraft configuration. Three types of ELCU are adopted to control the power to high power fan, motor or pump loads in different airframe systems [7].

At the same time, the four secondary power panels undertake the secondary power distribution function. P110, named the Left Power Management Panel, takes the charge of the distribution, protection and control of the loads associated with the left distribution channel. P210, named the Right Power Management Panel, takes the charge of the distribution, protection and control of the loads associated with the Right distribution channel. P310, named the Standby Power Management Panel, is in charge of the distribution, protection and control of the loads associated with the standby distribution channel. P320, named the Ground Servicing/Handling Panel, performs the distribution and protection function of the loads associated with ground handling. The secondary power panels get high power feeds from the primary power panels, and then distribute the power to the secondary loads. Three of the secondary panels have the Electronic Units (EUs) except the P320 [4]. Figure 3-4 presents the modular concept of EU. Each EU has the interface with the left and right aircraft system A629 data buses to provide communicating means with other airframe systems. Each EU has a dual redundant architecture to enhance the dispatch reliability. To provide the sophisticated load shed optimization capability, the EUs can control the status of the ELCUs within the primary power panels [7].

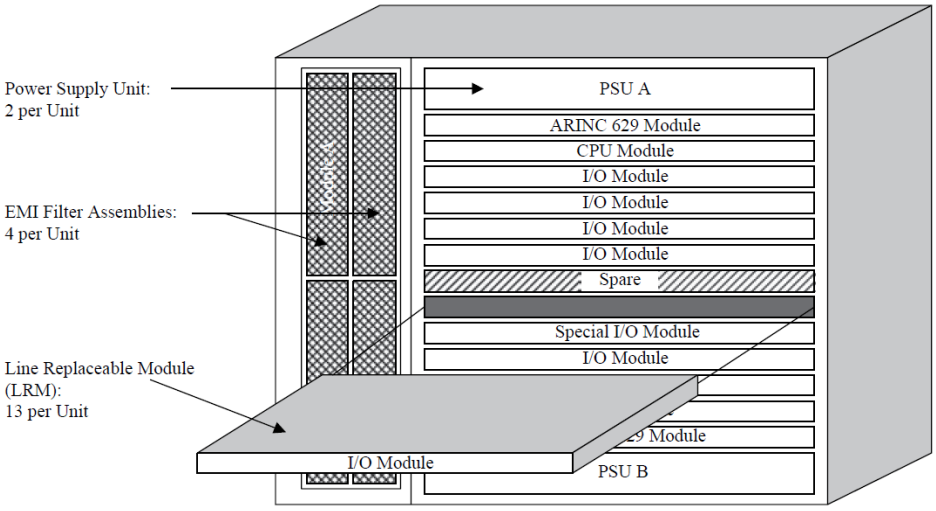


**Figure 3- 4 B777 ELMS EU Modular Concept [4]**

The ELMS of B777 has achieved a great many significant benefits, the most important one of which is the substantial reduction in weight, volume, wiring, connectors, relays and CBs. The adoption of digital data buses, the inbuilt intelligence, the extensive system Built-In Test (BIT), and the maintainability features, the load management and load optimization function automatic RAT deployment and many other features make it a true unique load management system rather than merely a simple EPDS. Figure 3-5 illustrates an overview of several of these significant functions [4].

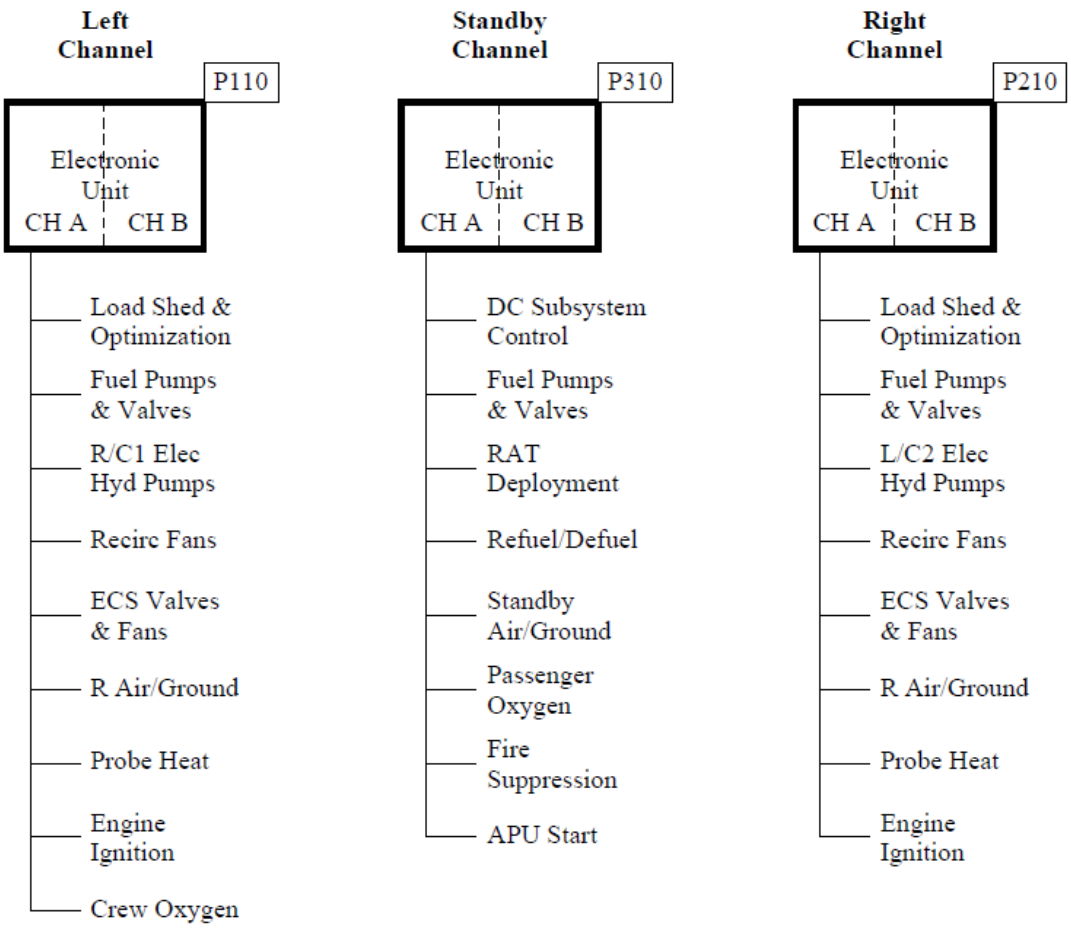


**Figure 3- 5 B777 ELMS Subsystem Function Overview [4]**

The B777 makes the best use of the ARINC629 digital data bus to integrate most of the aircraft systems, such as the avionics system, the FCS and the fuel system, and so on. Figure 3-6 describes a good many of B777 aircraft systems integrated by means of ARINC629 buses. Most systems and equipments are connected to the left and right aircraft system data buses, while some of them are also connected to a centre data bus at the same time. For example, the Electronic Engine Controllers (EECs) are connected to left, right, centre 1 and centre 2 data buses to perform the true dual-dual interface for the engines.

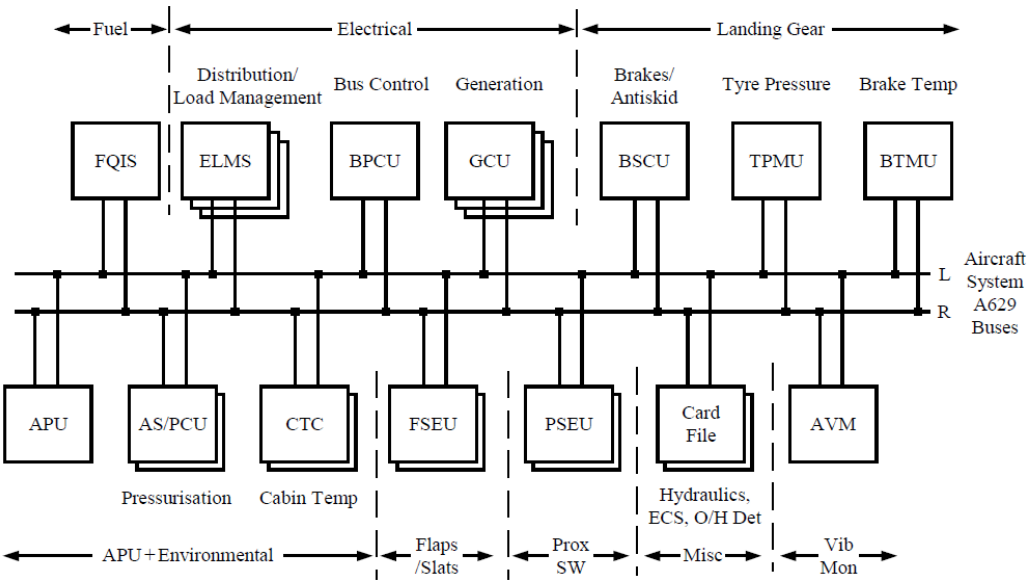


**Figure 3- 6 B777 Data Bus Architecture and Systems Integration [4]**

### 3.2.5 Discussion

The load control and management characteristics performed by ELMS are much more advanced than any other equivalent systems in airline service today. The load management function can be integrated into the ELMS EUs. When a main electrical power source fails or is unavailable, the most advanced feature is the sophisticated load shedding/ load optimization function. The system has the capability of reconfiguring the loads to achieve the optimum distribution of the current available power. On condition that the electrical power is recovered, the ELMS can re-instate the loads shed on the basis of lots of various loads schedules. Therefore, the ELMS of B777 has the ability of making the optimum use of the electrical power at any time rather than simply shedding loads under an emergency condition.

The load management and control is performed depending on the EUs located within the P110, P210 and P310 secondary power management panels. Each EU comprises a modular suite of Line Replaceable Modules (LRMs) which can readily be replaced conveniently with the door open [4].

In order to manage the electrical power more effectively for future systems, the

refinement and further development of the techniques on advanced ELMS need to be taken into consideration, especially for very large transport aircraft. Much more attention needs to pay to the load shedding optimization and load management features. Further consideration also needs to be given to the nature and effect of the extremely high power motor loads required in some systems, such as IPS and ECS [7].

## 3.3 Active Power Management for AEA

### 3.3.1 Electrical Power System

Figure3-7 shows the typical power system architecture of the Flying Crane of the first Cohort – an AEA. There are four starter/generators embedded inside the all-electric engines. They can be used as the starters to start the engines via the regulation of bi-directional converter by ground electrical cart or APU. Each engine can drive two internal generators. One generator operates as the starter which is installed in the engine high pressure shaft. The other one located on the low pressure shaft is used to supply electrical power under emergency conditions and can be used at any time. The generators will supply sufficient electrical power to the equipments and systems under the control of power electronics controllers. The APU also drives two starter/generators to provide electrical power in case one or two main engines fail. The APU can be started by the battery along with the starter/generator [15].

This electrical power system adopts the 270V DC high voltage power generation system. This type of power can be used by the motor driven compressors of ECS, the electric actuators and the motor controllers. There are some loads requiring 28V DC and 115V AC power, so the DC/DC converters and static inverters are needed.

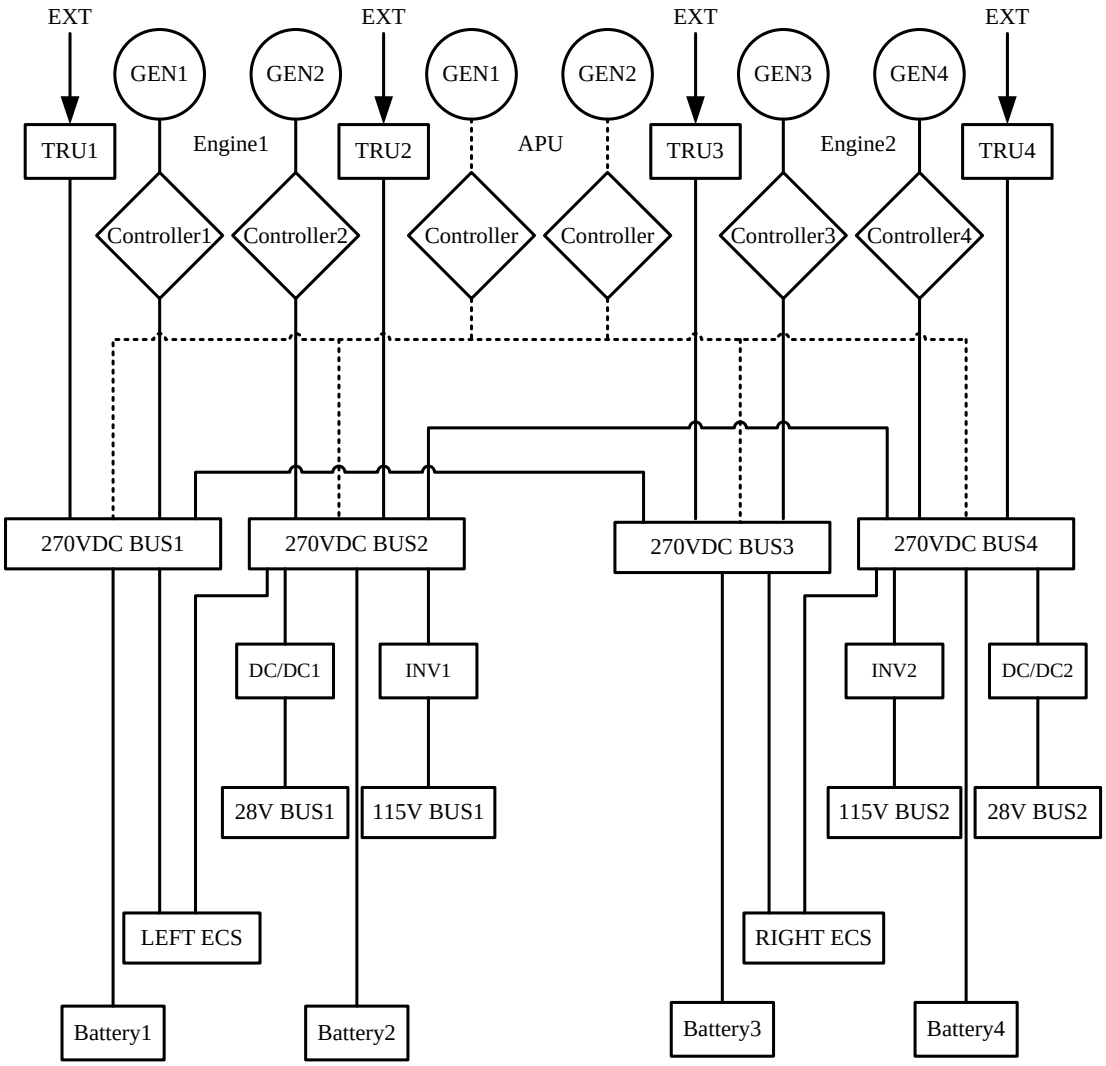


**Figure 3- 7 Electrical Power System Architecture of AEA [15]**

To meet the heavy demand of electrical power, four external power interfaces are arranged on the aircraft. The type of the external power sources is 115V 400Hz constant frequency power which mismatches with the main power sources of 270V DC power. Therefore, four TRUs are applied to convert the AC ground power to 270V DC power. Two static inverters and two DC-DC converters are also adopted to provide different types of power. The static takes the charge of converting the 270V DC power to 115V AC power. The DC-DC converter is in charge of changing the 270V DC power to 28V DC power [15].

There are four batteries utilised in the EPS to supply 270V DC power in case that the aircraft goes into malfunction.

In normal operation, while on the ground, the external power sources provide the aircraft with enough electrical power via TRUs. If any external power is unavailable, the APU generators can start and power the aircraft. When the main generators are put into operation and the APU generators are disconnected from the electrical net, the main generators will supply electrical power for the aircraft during all flight phases.

If one main engine fails, the APU will replace the failed engine and be connected to the electrical net to supply power to the aircraft.

If two engines and APU all fail synchronously, the system enters the emergency operating status. The Battery will be connected into the net to power the vital loads. Meanwhile, very high power capacity is required for the motor to drive compressor of ECS, but the capacity of one generator is not high enough. So two primary power sources will be paralleled together to provide power to it [15].

### 3.3.2 Power Distribution System

An advanced sophisticated EPDS is adopted on this AEA. The power distribution architecture is shown in Figure3-8. This power distribution system consists of a Power Management Centre (PMC), four Primary Power Units (PPU), six Secondary Power Units (SPU) and relevant high speed data bus. According to various load quantity and system architecture, the exact number of power units can be changed. The primary and secondary power units share the similar architecture and design. These power units are located in different zones of the aircraft with the purpose of reducing the length and weight of the wires. Moreover, the maintainability of such system is also improved [15].

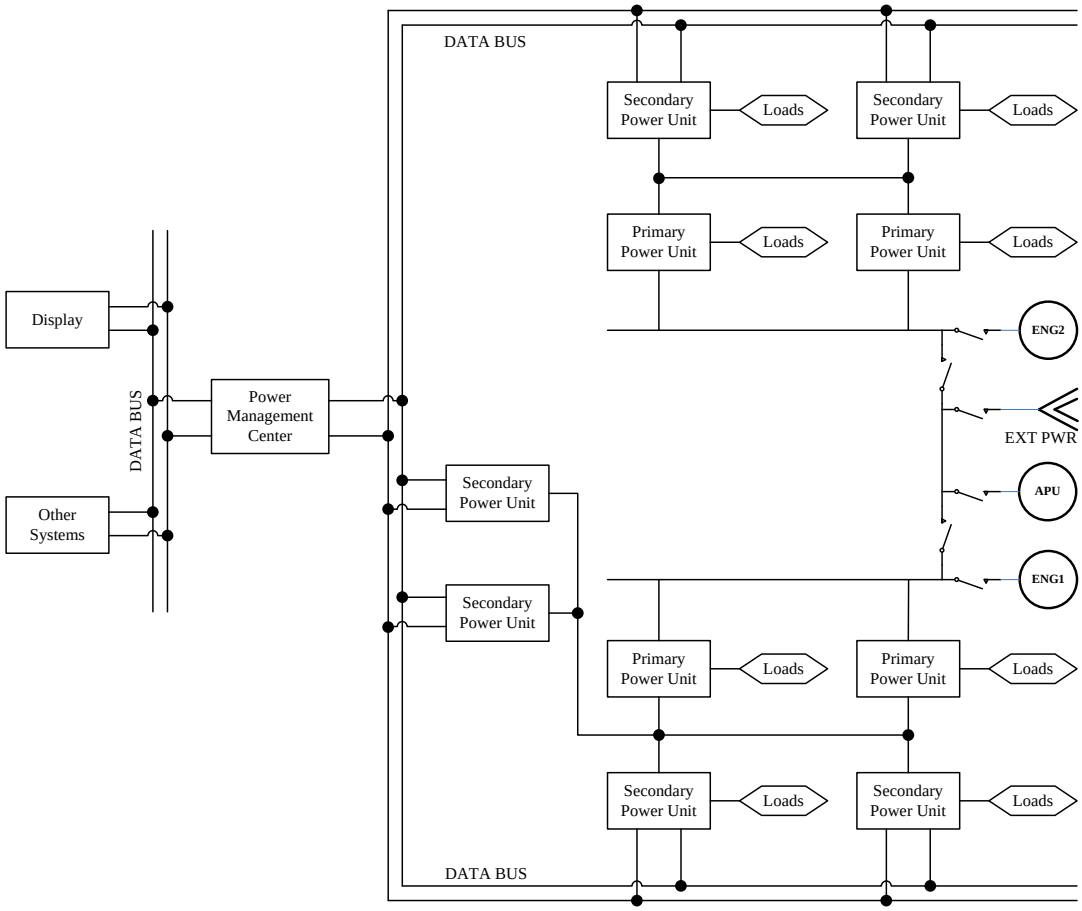


**Figure 3- 8 Power Distribution Architecture of AEA [15]**

The six SPUs are connected to the PMC via a high speed data bus with dual-redundancy. These SPUs and the PMC can exchange data and signals efficiently. The PMC can also intercommunicate with the display system and other systems via another data bus. The PMC collects and receives the status of electrical system and other systems, and then sends them to the display/warning system.

The primary power units can get power from the main generators and APU generators, and then distribute the power to SPUs. Some high power loads get power from the PPUs directly, such as ECS motor and some actuators. The SPUs will supply power to the other low power loads. Moreover, the SPUs manage the operation of all components situated in primary power units. The PMC along with the PPUs and SPUs together controls the power flow from the power sources to each load.

### 3.3.3 Active Power Management

The active power management system adopts time-sharing and power-sharing methods to determine the working and idle state of loads efficiently. All electrical loads are activated by demand from the controllers. Time-sharing function is achieved by rotating the working/idle state of some loads. When these electrical loads are in idle state, the power consumed on them can be redistributed to other systems or devices. Power-sharing function is performed by cycling the electrical power between some devices. Under some special conditions, the power summation of these devices has to be fixed. But the power consumed on one or more devices can be reduced to a proper level. Then the power set aside from these devices can be redistributed to other loads. Actually such working period of these devices is usually not very long [15].

To manage all the electrical loads effectively, it is fundamental to divide them in groups according to the velocity, attitude and mission requirements of the aircraft. The loads belonging to the same group get power and operate simultaneously. At the end of a period of time, some loads may stop working, while some other loads will go on working for several periods of time. The transition between groups must be accomplished not to affect the normal operation of each device or system.

In AEA, some devices may work intermittently or operate with variable power consumption. To use the available electrical power sufficiently, the operation conditions and features of each power consumer must be investigated in detail. After detailed analysis, all the loads can be divided into three groups. The first group includes the devices or systems operating without intermission, such as ECS and the primary flight control surfaces, which need to operate during the whole flight profile, although the power consumption varies in some flight phases. The second group consists of the loads that operate intermittently or

work in less frequency, such as slat and flap, whose power consumption may vary under different situations. When these devices are in idle state, the power used by them could be redistributed to other loads. The third group is composed of the systems or devices only operating for short time during some particular flight phases, such as the landing gear and brakes.

The active power management is performed mainly through rotating the loads on the basis of the demands of the aircraft. First of all, PMC gets the status and attitude parameters or signals from the FCS and avionics system via the high speed data bus. Next, the PMC confirms the status of the aircraft after dealing with these signals. Then, PMC sends commands to the relevant PPUs or SPUs to activate the corresponding loads by controlling the on/off of SSPCs. The operating list of each load, the power control strategy, the load shed and load restoration strategy are stored in PMC. The PMC will send various commands to the PPUs and the SPUs to optimize the power flow under various conditions. The whole operation process of the active power management system is running automatically [15].

### 3.3.4 Discussion

The Flying Crane in first cohort adopts 270V DC high voltage power generation system, advanced distributed power distribution system and the active power management system with high performance. There are four starter/generators to supply enough uninterrupted electrical power to onboard systems. In order to fulfill various power requirements of electrical loads, DC-DC converters, static inverters are utilised.

The power distribution and management system has flexible extensibility and the number of PPUs and SPUs can be changed easily in accordance with the demand of aircraft. The electrical system interacts with avionics system and FCS in real time through the high speed data bus.

The active power management system applies the methods of time-sharing and power-sharing to compress the peak power requirement of electrical loads. As a result, the overall power requirement of the aircraft is compressed significantly. Furthermore, the PPUs and SPUs are distributed in different zones onboard. This kind of power distribution system greatly reduces the length and weight of cables and wires. The testability and maintenance of the electrical system are also increased dramatically [15].

## 3.4 Conclusion

This chapter investigates the electrical power system and power management of three different types of aircraft-A320, B777 and an advanced AEA – the Flying Crane of the first cohort.

In conventional civil aircraft, such as A320, the centralised electrical system is adopted to distribute electrical power from the central control panels located in the flight deck to each power consumer. The power distribution and power management of A320 is simple and out of date. Such semiautomatic power distribution system is complicated, heavy and could not meet the increasing power requirement of large aircraft.

B777 is the first aircraft that applies the load management system. The ELMS of B777 is more efficient and sophisticated than the traditional electrical power system with the only load-shedding capability under an emergency occasion. As is known, the power management and load management functions are integrated into the right, left, and standby power management panels. Furthermore, the EUs integrated in the secondary power panels control the ELCUs to supply electrical power to heavy loads. Each load is under control and management and a relatively advanced automatic load shedding function is achieved. To achieve the optimum power usage, this system can reconfigure loads according to the available power capacity and various

mission profiles. But due to the limited information, detailed analysis on B777 power usage and power management is not available.

With regard to an advanced AEA, the advanced distributed power distribution architecture and intelligent active power management are adopted. In normal operation, by using the time-sharing and power-sharing strategy, the maximum power requirement of the whole aircraft can be compressed as much as possible. Thus the power capacity and weight of power sources can be reduced significantly. However, how to shed the loads under failure conditions is not mentioned in this part. This function plays a very important role on the management of electrical power distribution system. In next chapter, the detailed load management method will be brought forward.

# 4 Electrical Power System of Baseline Aircraft

## 4.1 Power Generation System

The electrical power system of the baseline aircraft, the Flying Crane has been designed to satisfy an AEA requirement. Most importantly, the electrical power system of the Flying Crane is a symmetric multi-redundancy system. Each of its left and right power distribution channel not only provides enough power to its own side, but also backs up each other. It has a power generation capacity of 300kVA supplied by two 230V 150kVA VF starter/generators. This met the power requirement in all flight phases and operating conditions on the basis of load analysis. There are four types of loads utilized on the Flying Crane. Besides conventional 115V 400 Hz AC and 28V DC loads, 230V VF and 270V DC loads are also utilized. This has brought forward a dramatic challenge to the electrical power system design. To cope with such loads diversity, different power converters requiring various power capacity were utilised and in turn enhanced the flexibility of the electrical system significantly.

Figure 4-7 illustrates the schematic diagram of the EPS of the Flying Crane.

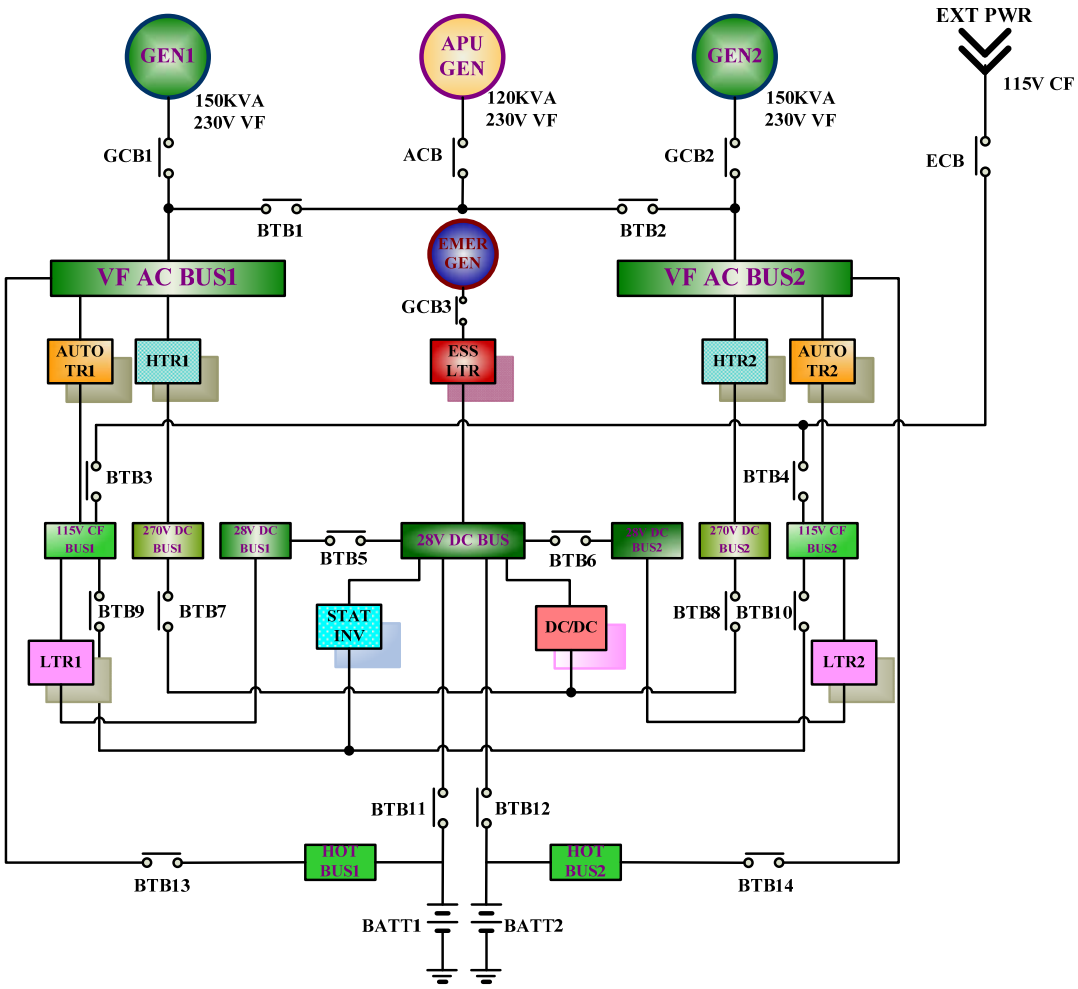


**Figure 4- 1 Electrical System Schematic Diagram**

The main parameters of the EPS are as follows:

a) Main engine generator: 230V VF(360~760Hz), 150KVA

b) APU: 230V VF(360~440Hz), 120KVA

c) EXT Power: 115V 400Hz

d) RAT: 115V VF, 15KVA

e) Battery: 28V, 45Ah

On the basis of load analysis (See Appendix A Load Statistics), six types of power converters are adopted in the electrical power system, which are listed as follows:

a) Auto Transformer (Auto TR): Convert 230V variable frequency power

to 115V 400Hz power;

b) High voltage Transformer Regulator (HTR): Convert 230V variable frequency power to 270V DC power;

c) Low voltage Transformer Regulator (LTR): Convert 230V variable frequency power to 28V DC power;

d) Essential Low voltage Transformer Regulator (ESS LTR): Convert 115V variable frequency power from RAT to 28V DC power;

e) DC/DC converter: Convert 28V DC power from 28V emergency bus to 270V DC power;

f) Static Invert (STAT INV): Convert 28V DC power from 28V emergency bus to 115V 400Hz power.

The EXT power is just connected to the 115V CF bus bars. And the LTRs are used to convert 115V CF power to 28V DC power. Thus in the case of on the ground, when the EXT Power is available, all the loads needing 115V CF and 28V DC power on the aircraft can get power supply.

In normal operation, both of the main engine generators can share to supply approximate half of all loads. The main engine generators can supply 230V variable frequency electrical power to the variable frequency bus bars. Then different kinds of power converters will transform the variable frequency electrical power to different types and distribute them further to corresponding bus bars. All kinds of power consumers are connected to these bus bars and then are powered under the management of power distribution management system.

If one main generator fails, APU will take the place of the failed one and supply the corresponding channel. In this case some non-essential loads shall be shed. In case of both engines failure, APU alone can supply all the essential and vital loads for a safe landing.

If both of the main engine generators and APU fail at the same time, The Ram air turbine (RAT) can be extended manually or automatically to provide sufficient power and enough time for the crew to restore the main generators or land on the nearest airfield. Profit from the multi-redundancy design, the safety and reliability of the EPS are enhanced dramatically.

## 4.2 Power Distribution System

The power distribution system of the Flying Crane is a typical distributed power distribution system, which consists of two BPCUs acting as the data bus controller, two PPDUs powering the AC loads with high power requirement, and six ELMCs supplying 28DC or 270DC electrical power to all the other loads. The whole power distribution system is connected through a high speed data bus with dual-redundancy. The power distribution and management architecture is shown in Figure 4-2.

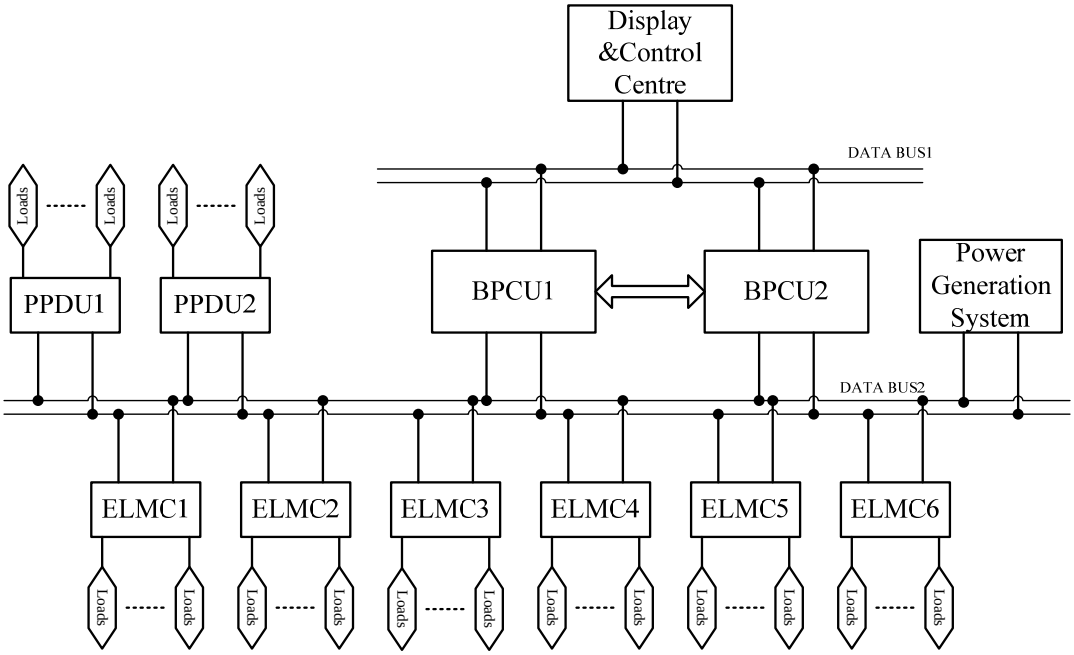


**Figure 4- 2 Power Distribution and Management Architecture**

BPCU1 is the main control unit, while BPCU2 is the backup unit. Only when BPCU1 fails, the BPCU2 will replace BPCU1 and takeover the management function of the whole electrical power system. In normal operation, BPCU

collects the status of the entire power system, and sends status information to the display and control centre. After analysis, if the power capacity is not enough in the current operating scenario, BPCU1 will send the load shedding commands to the corresponding PPDU or ELMC according to the overload degree.

The PPDUs can get power from the main generators and APU generator, and then distribute the power to ELMCs. Some high power loads get power from the PPDUs directly. The main functions of PPDUs are as follows:

a) Perform the architecture reconfiguration function when there is some failure in power supply channels.

b) Provide 230V VF and 115V CF power to very high power loads of its corresponding power distribution channel.

c) Perform the load management function of primary power distribution loads of its own channel.

d) Collect and confirm the status of corresponding primary power distribution centre (PPDC), and send this information to BPCU.

The main functions of ELMCs are as follows:

a) Provide different kinds of power to different loads of the corresponding secondary power distribution centre (SPDC).

b) Receive the power supply status signal from power generation system.

c) Perform the load management function of secondary power distribution system.

d) Collect and confirm the status of the corresponding SPDC, and send this information to BPCU.

The two PPDUs and six ELMCs are connected to the BPCU1 and BPCU2 through a high speed data bus with dual-redundancy. All these control units

can exchange information efficiently in real time. The BPCU collects the status and failure information of the whole electrical system and uploads this information to the display and control centre via another data bus. The BPCU along with the PPDUs and ELMCs together control the power flow from the power sources to each load, and perform the intelligent load management function automatically.

## 4.3 Load Analysis

In AEA, the electrical power system will replace all the other secondary systems such as bleed air system, mechanical system and hydraulic system, and will act as the one of a kind secondary power source. The ECS, IPS, actuation system and hydraulic system will all be powered by the electrical power system in AEA. The starter/generator will be adopted to complete the engine start function and the accessory gearbox will also be eliminated. To study the dynamic power distribution management method of AEA, it is of great importance to research and analyse the ECS, IPS, actuation system and electrical system on the Flying Crane. With the purpose of managing the power distribution system effectively, the power requirement of all loads in each flight phase needs to be acquired.

According to the regulation CCAR25.1351 (a), it is the electrical load analysis that can determine the capacity of the EPS [45]. Therefore, the following items need to be considered:

a) Power requirement (kW or kVA) of each load in operation on the Flying Crane, which is important to confirm the generation capacity of the primary generators

b) The type and voltage amplitude of each load to determine the capacity and type of power converters needed in total

c) Load classifying and the duty cycle in operation of all loads during

various flight missions, which can make for the design of system reconstruction under emergency occasions

To meet the challenge, the operational principle of all electrical loads must be obtained and analysed. While because of time limitation and lack of information about each load, not all loads requirement can be acquired. Nevertheless, an endeavor has been tried to perform the load analysis of the Flying Crane as clear as possible. Table 4-1 shows the power requirement of each system during all flight phases. The detailed load statistics are shown in Appendix A. A power estimate of all systems operating at 95% voltage was obtained to account for voltage drop in conductors.

**Table 4- 1 Power Requirement of each system**

| Systems | Ground (kW) | Take off (kW) | Climb (kW) | Cruise (kW) | Descent (kW) | Loiter (kW) | Landing (kW) |
|---|---|---|---|---|---|---|---|
| Electrical Power System | 3.2 | 3.2 | 3.2 | 3.2 | 3.2 | 3.2 | 3.2 |
| Environmental Control System | 141.3 | 5 | 131.3 | 136.7 | 131.3 | 131.3 | 5 |
| Ice Protection System | 5.63 | 9.61 | 27.68 | 27.68 | 27.68 | 27.68 | 1.02 |
| Avionic Systems | 9.54 | 10.34 | 11.14 | 16.14 | 11.14 | 11.08 | 10.34 |
| Cabin Equipments | 4.5 | 1.5 | 1.5 | 44.4 | 1.5 | 1.5 | 1.5 |
| Propulsion & Fuel System | 13 | 12 | 12 | 12 | 22 | 12 | 25.3 |
| External Lighting | 1.85 | 0.8 | 0.8 | 0.8 | 0.8 | 0.8 | 1.65 |
| Fire Protection System | 0.4 | 0.4 | 0.4 | 0.4 | 0.4 | 0.4 | 0.4 |
| Landing Gear System | 5.1 | 3.8 | 0 | 0 | 0 | 0 | 31.2 |
| Actuation System | 10.89 | 43.48 | 35.48 | 34.28 | 35.48 | 43.48 | 16.74 |
| **Total (kW)** | **195.41** | **90.13** | **223.5** | **275.6** | **233.5** | **231.44** | **96.35** |

According to the result of load analysis, four types of power sources are determined in electric power system, namely 115V/400Hz AC，230V/VF，28VDC and 270VDC (See Appendix A).

Table 4-2 illustrates the power requirement of different types of loads using different types of power at different flight phases. The detailed load statistics are listed in Appendix A.

**Table 4- 2 Power Requirement of Different Types of Loads**

| Power types \ Flight phases / Power requirement | Ground | Take off | Climb | Cruise | Descent | Loiter | Landing |
|---|---|---|---|---|---|---|---|
| 28VDC Loads (kW) | 33.08 | 21.82 | 22.62 | 22.62 | 32.62 | 22.56 | 22.57 |
| 270VDC Loads (kW) | 150.89 | 51.28 | 167.48 | 171.68 | 167.48 | 167.48 | 59.94 |
| 115V CF Loads (kVA) | 5.14 | 17.03 | 9.03 | 56.93 | 9.035 | 17.03 | 13.84 |
| 230V VF Loads (kVA) | 6.3 | 0 | 24.36 | 24.36 | 24.36 | 24.36 | 0 |
| Total (kW) | 195.41 | 90.13 | 223.5 | 275.6 | 233.5 | 231.43 | 96.35 |

From Table 4-2 it can be seen that the actual maximum power requirements of 28VDC, 270VDC, 115V CF, and 230V VF loads are respectively 33.08KW, 171.68KW, 56.935KVA, and 24.36KVA. The maximum power requirement of all the loads occurs during the cruise flight phase reaching 275.6KW. For the purpose of this thesis, loads requirements will be assumed to be correct.

Figure 4-3 illustrates the maximum power requirement of the Flying Crane at different flight phases in terms of operating voltage as provided by using the histogram.

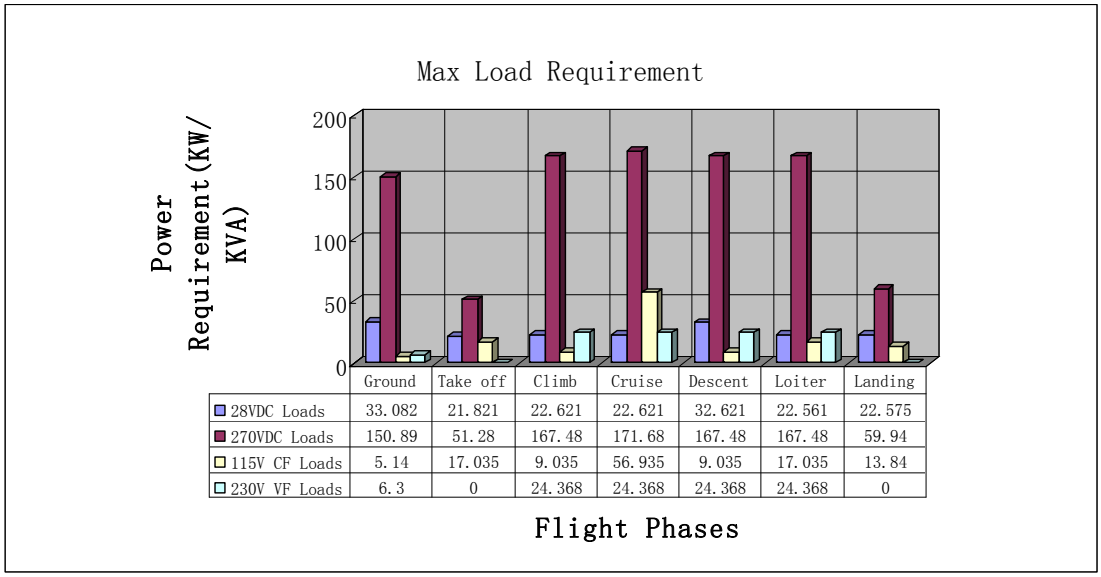


**Figure 4- 3 Max Load Requirement Histogram**

270VDC operating systems have the highest share of electrical power. This will influence the form of electrical power to be produced from the primary power sources.

As is known, all the electrical loads on aircraft can be classified as three main categories based on their functionality and importance as following:

a) Non-essential loads: their performance has no affect on the safe flight of the aircraft during various flight phases. Such loads will be firstly shed when any power source loses. For example, the water & waste system, passenger entertainment system, cabin equipments, and so on.

b) Essential loads: According to CCAR25, the essential loads refer to the loads whose function is requisite for safe operation on aircraft [45]. With regard to the Flying Crane, the majority of the power consumers will be powered by electricity. For example, the primary flight control actuation system, ice detectors, communication and avionics system, and so on.

c) Vital loads: These loads need to be in operation at all times during the flight, even under emergency situation. For example, the emergency lights, the flight control system actuators, and so on.

Table 4-3 and Figure 4-4 depicts the power requirement of the Flying Crane at different flight phases according to the importance groups.

**Table 4- 3 Loads Power Requirement with Different Importance Levels**

| | Ground (kW) | Take Off(kW) | Climb (kW) | Cruise (kW) | Descend (kW) | Loiter (kW) | Landing (kW) |
|---|---|---|---|---|---|---|---|
| Non-Essential | 150.79 | 24.83 | 169.2 | 203.3 | 169.2 | 169.2 | 22.66 |
| Essential | 39 | 56.54 | 45.54 | 63.54 | 55.54 | 45.48 | 67.71 |
| Vital | 5.62 | 8.76 | 8.76 | 8.76 | 8.76 | 8.76 | 5.98 |
| Total | 195.41 | 90.13 | 223.50 | 275.60 | 233.50 | 231.44 | 96.35 |

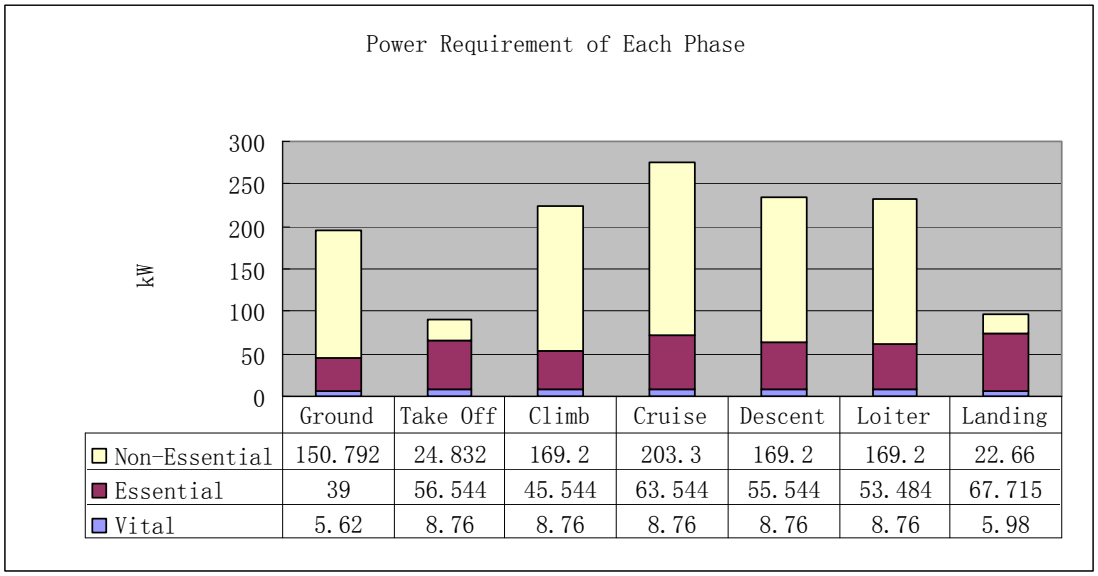


**Figure 4- 4 Loads Power Requirement with Different Importance Levels**

## 4.4 Load Allocation

Figure 4-5 below illustrates a top view of the Flying Crane electrical power distribution and generation powered by two primary generators, and an APU generator coupled to the APU gas turbine. The output power from each primary generator and the APU generator is transmitted by the main power feeders to the Primary Power Distribution Units located in the fuselage near the wing root area.

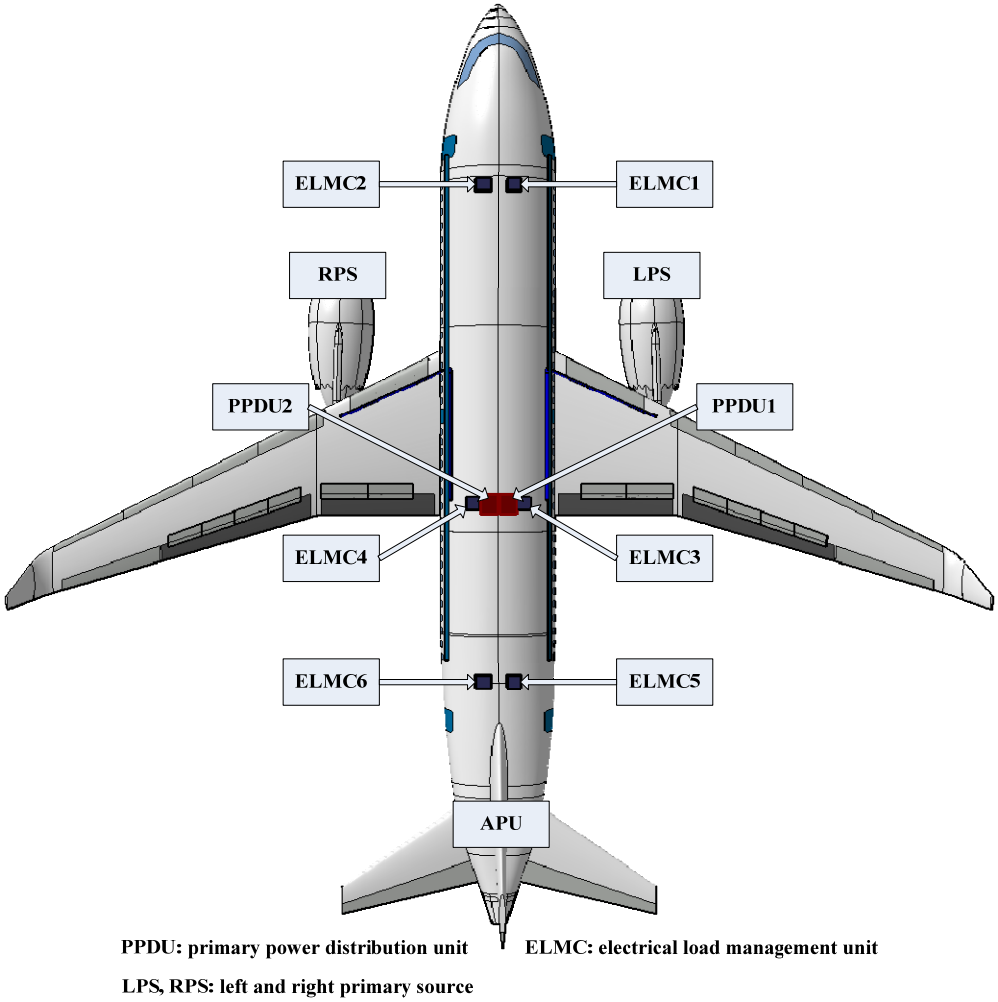


**Figure 4- 5 Lay out of EPDS**

The EPDS includes two primary distribution units located on each side of the fuselage. The generator coupled to the left engine and the APU generator supply power to the PPDU1 installed on the left side of the Flying Crane fuselage. At the same time, the right generator coupled to the right engine together with the APU generator feeds the PPDU2.

Each PPDU operates at 230V AC and 115V AC and includes generator control units which control the operation of engine mounted generators, APU generators and emergency generators on the Flying Crane. The PPDU will house the fuel pumps electric motor controllers. This can benefit to reduce the number of wire runs to one instead of more. Using the motor controllers offers the benefit of having an effective real time load management capability.

## 4.5 Conclusion

Due to the elimination of the centralised hydraulic and pneumatic systems, the whole electrical power generation capacity for the Flying Crane was estimated unequivocally to be higher than those of currently in any of the airline fleets, which comes up to 300KVA. This met the power requirement in all flight phases and operating conditions on the basis of load analysis. To meet the power quality and stability conditions, more efficient power distribution system and advanced power electronic interfaces were employed. In order to meet the high power requirement, 230V VF power generation and fault tolerant distributed power distribution architecture were adopted, which promised greater efficiency of the overall system and significant reduction of cables mass.

Optimized power requirements were achieved by using dedicated methodologies of power consumption for all kinds of loads on the Flying Crane. The ratio of the average operating electrical power to maximum electrical power of each type of loads was estimated. These values played an important role in estimating the overall power capacity of the main generators and the APU generator.

Appropriate locating the Primary Power Distributed Units and the Electrical Loads Management Centers on the aircraft contributed to saving the number of cable runs. This also led to the reduction in parts count whilst resulting in saving the weight of cables.

Furthermore, by designing a sophisticated yet highly flexible secondary power distribution system architecture, the requirements of all the variants of the Flying Crane could be met, thus making it a true family of aircraft.

# 5 Dynamic Power Distribution Management for AEA

In AEA, all the other secondary powers are replaced by electrical power to drive the devices and systems on board. How to manage and control all these devices and systems effectively and efficiently is the most important thing to do. The dynamic power distribution management system takes charge of the electrical power distribution and load management during each flight phase. Each electrical load will be activated on demand according to the status of the power sources and the load power supply priority levels. The dynamic power distribution management system monitors the status and power dissipation of each power generation channel in real time. Then it decides if there is any need to shed some loads. In this system, the microcomputer takes the place of the pilot to perform the management of the electrical power distribution system. The switching-on and switching-off of each electrical load must be performed according to the logic control equation of each load. Each load on the aircraft has a corresponding logic control equation for itself.

Under dynamic power distribution management, the loads needing to be powered should get enough electrical power, which means the overall power provided by the generators is high enough to meet the whole aircraft requirement. Then, the dynamic power distribution management takes charge of applying the appropriate method to regulate and distribute the electrical power to all the loads according to the characteristics of equipments during various flight profiles and under different situations. To make full use of available electrical power, the performance characteristics and operating conditions of each load need to be investigated thoroughly in detail. The power supply priority levels of all loads requiring management will be discussed and developed. The power request equations and control equations of electrical loads will be established. The reliability and maintainability of electrical power system can also be improved significantly by using this dynamic power distribution management method.

## 5.1 Load Priority Levels

In the case where one or more of the aircraft's power sources fail, the power capacity of the remaining power sources cannot supply enough electrical power to all of the electrical loads in normal operation. The dynamic power distribution management system will shed some electrical loads automatically according to the predefined load priority levels to assure that the power dissipation of the remaining loads can match with the power capacity of the electrical power supply system, thus to assure to continued safe flight.

The automatic electrical load management is on the basis of load priority levels. The set of load management priority levels is dependant on the number of generators, the capacity of the generators, flight phases of aircraft, the allocation of bus bars, and the type and power requirement of the loads. The most important thing is how to set the load management priority levels. The detailed analysis is as follows.

Firstly, all electrical loads on aircraft can be divided into three types according to their importance to the aircraft safety and mission function, which are classified as vital, essential and non-essential. In normal operation, the vital, essential and non-essential loads can all get enough power. In the case that some kind of failure occurs among the main power sources, the normal power supply then will not be guaranteed. Some non-essential loads will be shed to ensure that as many as possible essential loads can get power. If all the main power sources are unavailable, the non-essential and essential loads will be shed and the emergent power source will supply power to the vital loads. To sum up, the vital loads have the highest power supply priority at any time, while the priority levels of non-essential loads is the lowest.

The second key point needing to be considered is the capacity of the power supply system. The operation of all loads on aircraft is closely related to the operation status of power sources. The dynamic power distribution

management system detects the current status of each power source and of each power supply channel. When counting the electrical loads, the power requirement, coefficient and operation duty cycle of each load should also be taken into consideration. The power capacity of power sources must fulfill the power requirement during various flight phases.

Another important aspect is the flight phases. Typically, a civil aircraft flight phases can be divided into seven stages: ground, take-off, climb, cruise, descent, loiter and landing. At different flight phases, different electrical loads will be in different status (in operating or not). During each flight phase, each contactor or SSPC has its initial default status. The definition of the default status of each switch device is on the basis of the investigation of load analysis and power system operating principle. Table 5-1 lists the default status matrix of all the switch devices at each flight phase. Here these data are not the actual ones. They are the assumption of the author to make it clear of the typical management method.

**Table 5- 1 Default status matrix of all switch devices**

| Flight Phase / Default Status / Switch Devices | Ground | Take off | Climb | Cruise | Descend | Loiter | Landing |
|---|---|---|---|---|---|---|---|
| GCB1 | 1 | 1 | 1 | 1 | 1 | 1 | 1 |
| GCB2 | 1 | 1 | 1 | 1 | 1 | 1 | 1 |
| GCB3 | 1 | 1 | 1 | 1 | 1 | 1 | 1 |
| ACB | 1 | 1 | 1 | 1 | 1 | 1 | 1 |
| ECB | 1 | 0 | 0 | 0 | 0 | 0 | 0 |
| BTB1 | 1 | 1 | 1 | 1 | 1 | 1 | 1 |
| ⋮ | | | | | | | |
| BTB14 | 1 | 1 | 1 | 1 | 1 | 1 | 1 |
| SC1* | 0 | 1 | 0 | 1 | 0 | 1 | 0 |
| ⋮ | | | | | | | |
| SCm | 1 | 0 | 0 | 1 | 1 | 0 | 1 |
| SSPC1 | 1 | 1 | 0 | 0 | 1 | 1 | 0 |
| ⋮ | | | | | | | |
| SSPCn | 1 | 0 | 1 | 0 | 1 | 1 | 0 |

* SC：Smart Contactor

By confirming this default status matrix list of all switch devices at each flight phase, the maximum power requirements at each flight profile can be optimized. This can contribute to the reduction of power capacity of the power sources. Not all loads need to operate during the whole flight process. Therefore, the maximum power requirement of the electrical loads during these seven flight phases is figured out, and then the power capacity of the power supply sources can be confirmed.

According to the result of the load analysis, all the electrical loads needing to be managed can be listed in a queue according to their importance at each flight phase. The importance and power capacity of each load needs to be investigated in detail. The power supply priority levels show the priority of the loads getting power. Each electrical loads needing managed has a corresponding priority level at each flight phase. The smaller the serial number is, the higher the power supply priority level is. These priority lists are stored in the controller of the BPCU. When the BPCU detects the current of the power generation channel of its side is over current, the BPCU will compare this over current value with the base line value and determine which loads should be shed to eliminate the over load issue. Then the BPCU send the load shed command to the PPDUs and ELMCs to shed the corresponding loads. Therefore, the BPCU is the commander, while the PPDUs and ELMCs are the executors. The BPCUs detect the current value of each power generation channel in real time, and compare this value with the base line value. If the over current status still exists, the BPCUs will give the command to shed some other loads according to the load priority levels from lower to upper till the overload status disappears.

Table 5-2 shows an example of the priority levels at each flight phase. The smaller value means higher priority. It is noted that since a set of real data is not available, the listed data are artificial assumed by the author to

demonstrate the process of the power management method. In real life, the data should be obtained from test and the priority levels needs to be analysed carefully and thoroughly after detailed load analysis and investigation.

**Table 5- 2 Priority Levels at each Flight Phase**

| Flight Phases / Priority / Switch Devices | Ground | Take off | Climb | Cruise | Descend | Loiter | Landing |
|---|---|---|---|---|---|---|---|
| SC1 | 34 | 33 | 31 | 33 | 35 | 41 | 32 |
| SC2 | 37 | 42 | 38 | 35 | 41 | 38 | 36 |
| SC3 | 35 | 35 | 34 | 36 | 31 | 34 | 37 |
| SC4 | 36 | 37 | 39 | 37 | 33 | 39 | 41 |
| SC5 | 32 | 32 | 33 | 38 | 38 | 31 | 31 |
| SC6 | 42 | 39 | 37 | 41 | 36 | 35 | 39 |
| ⋮ | | | | | | | |
| SCm | 38 | 38 | 32 | 42 | 37 | 40 | 33 |
| SSPC1 | 45 | 43 | 40 | 31 | 30 | 33 | 34 |
| SSPC2 | 39 | 36 | 35 | 32 | 43 | 37 | 40 |
| SSPC3 | 44 | 41 | 42 | 34 | 42 | 32 | 38 |
| SSPC4 | 31 | 31 | 36 | 39 | 32 | 36 | 35 |
| SSPC5 | 46 | 34 | 41 | 40 | 43 | 42 | 41 |
| SSPC6 | 12 | 13 | 11 | 10 | 12 | 11 | 13 |
| ⋮ | | | | | | | |
| SSPCn | 21 | 20 | 22 | 23 | 23 | 21 | 20 |

## 5.2 Power Request Equation

The dynamic power distribution management system performs the electrical loads control function via the smart contactors and SSPCs. During various flight phases, the BPCU sends the flight mission pattern information to the PPDUs and ELMCs. The PPDUs and ELMCs will calculate the corresponding power request equation and load control equation, and then control the on/off of each electrical load.

For the loads requiring to be powered under different flight missions during various flight phases, when the status control logic meets the requirement and the power supply system operates normally, these loads can be switched on

and be supplied with electrical power. When the loads should and can operate, the power request equation will send the power supply request signal to the electrical system. The power request equation is decided by the flight mission patterns and the status control logic signals. The input variables are all logical, and the result of the equation is a logic state. Q = 1 shows this electrical load requests electrical power. Q = 0 shows the electrical load doesn't need electrical power. The power request equation is as follows:

$$Q = M(m_1, \ldots, m_7) \cap L(l_1, \ldots, l_N) \qquad N \geq 1 \qquad (1)$$

$m_i$ ($1 \leq i \leq 7$): the load operation request signal during seven flight phases.

$m_i$ = 1 shows the request signal is valid.

$l_j$ ($1 \leq j \leq N$): the Status logic signals, such as sensor's signal or contactor's status signal. $l_j$ =1 shows the logic signal is valid. Normally $N < 20$.

If the power request of some loads is only related to the flight mission patterns, and there are no additional status logic control signals, then $L(l_1, \ldots, l_N)$ is equal to 1. If the power request of some loads has no relationship with the flight mission patterns, that is, these loads need to get power in each flight phase, the $M(m_1, \ldots, m_7)$ is equal to 1.

The power request equation of each load is solved by the load control executors PPDUs or ELMCs.

## 5.3 Load Control Equation

If the power request signal of a load is valid, it means this load needs to work under the current flight phase. However, the on or off control of the load is not only related to the power request signal, but also is related to the failure state of the control device itself, the super control signal and the power capacity of

the power sources. If the control device of the electrical load fails, the power supply to the corresponding load is prohibited. If the current power capacity of the power sources cannot fulfill the power requirement of the electrical loads in operation during the current flight phase, the dynamic power distribution management system would have to shed some loads automatically. Therefore, a universal electrical load control equation can be implemented.

$$C_{on} = N \cap D \cap Q \cap \overline{S} \cup H \tag{2}$$

All these variables in this equation are binary logic variables.

$C_{on}$: The load switch-on control command. $C_{on}$=1 shows the switch-on command can be sent to this switch device, and the corresponding load will start to operate after getting switched on. $C_{on}$=0 shows this switch device cannot be switched on, and the corresponding load cannot get power.

$N$: The status flag of electrical load. $N$=1 shows this load operates normally and can get power. $N$=0 means this load fails.

$D$: The default power supply status of the load in current flight phase. $D$=1 shows it is required to supply power to this load during the current flight phase. $D$=0 shows this load does not work in this flight phase.

$Q$: The power request signal of the electrical load, which is mentioned above. This is the result of the power request equation. $Q$=1 shows this load can get power. $Q$=0 means this load cannot be powered.

$S$: The load shed signal from the BPCU. $S$=1 shows the load shed signal is valid and this load needs to be shed.

$H$: The super control signal from the cockpit. $H$=1 shows the super control signal is valid. $H$=0 means there is no super control signal. The

crew has the higher priority to intervene in the system by switched on/off some essential loads via the touch screen located in the cockpit.

Each load needing to be controlled has a unique load control equation separately. These load control equations are also solved by the PPDUs and ELMCs.

## 5.4 Dynamic Power Distribution Management

In normal operation, the power capacity of the power sources is enough for all electrical loads to operate. However, when some fault occurs in the power generation system, or if one or both the main generators are unavailable, the remainder of the power capacity is not enough to support all electrical loads. In such scenarios, some non-essential loads should be shed automatically. Thus the dynamic power distribution management system will operate to manage the electrical loads. For the aircraft with multiple engines, the power distribution management consists of two main stages: system reconstructing and auto electrical loads shedding (See Figure 5-1).

Firstly, the BPCU collects the status of flight mission profiles and the status of power sources in real time. When the BPCU detects there is some failure in a power generation channel, it will reconstruct the system configuration.

After that, if the BPCU still detects the overload signal of the power generation channel, it will determine which loads need to be shed, and then send these load shed signals to corresponding PPDUs or ELMCs. The PPDUs or ELMCs will call the load management programme to solve the load control equation. Then some non-essential loads will be shed automatically.

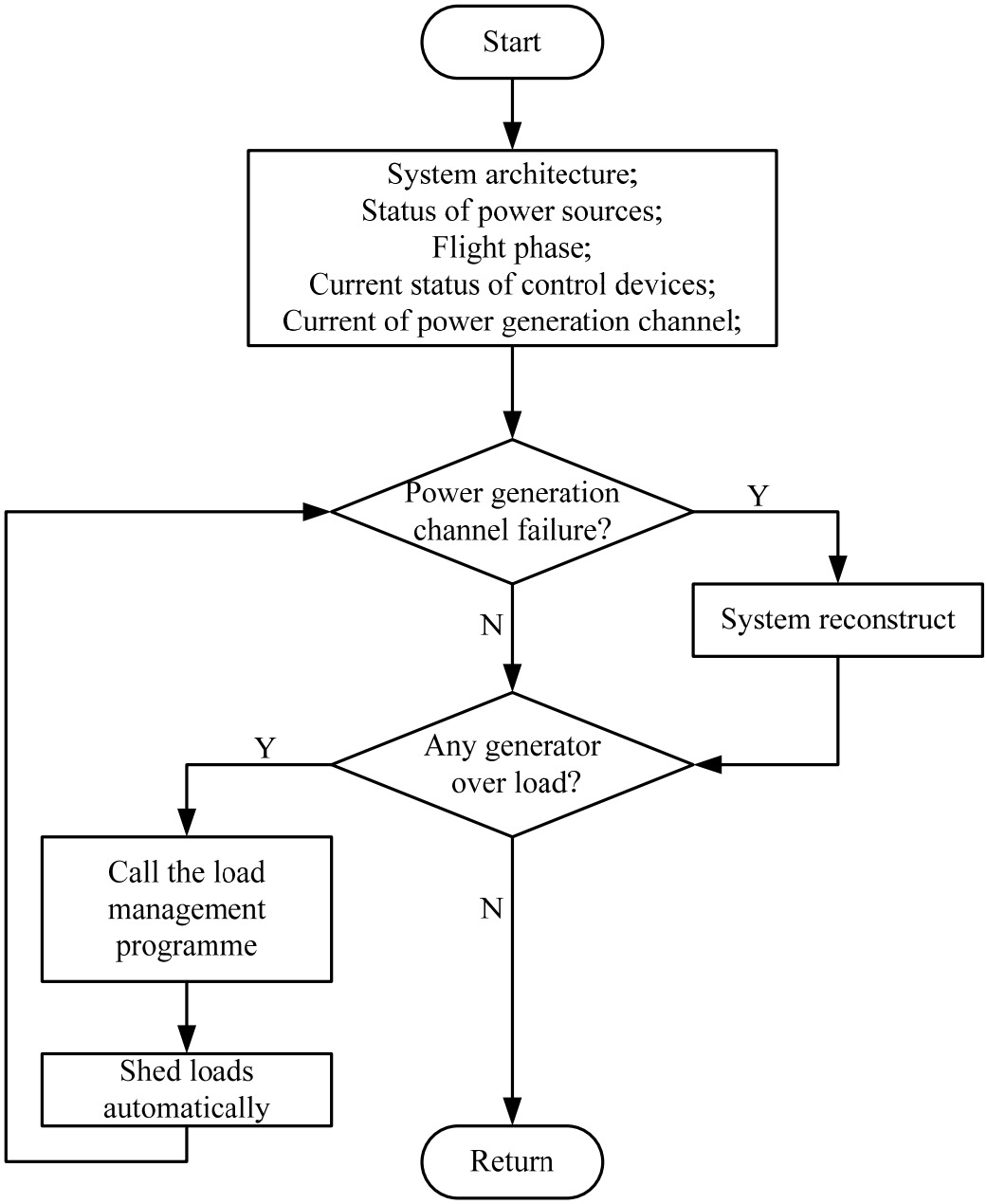


**Figure 5- 1 Power Distribution Management Flow Chart**

When the flight phase changes or some fault occurs in the power generation system, the electrical loads control programme will be activated. According to the flight phase, the corresponding default status of each load and status of power sources, the electrical load control programme can confirm the power request signal of loads. Then the load control programme will calculate the current control command of each load, and a certain quantity of electrical loads can be supplied with electrical power. Figure 5-2 illustrates the flow chart of the

load management process.

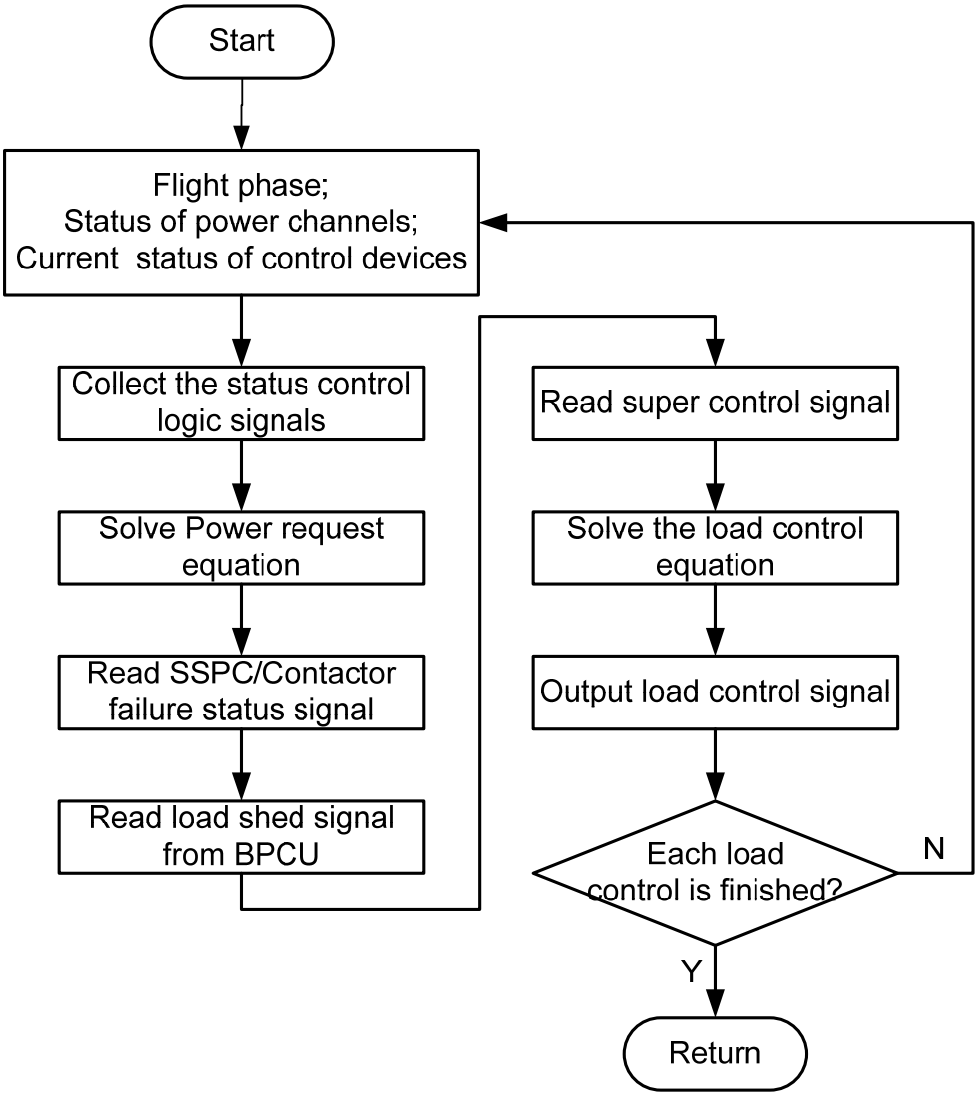


**Figure 5- 2 Load Management Flow Chart**

The load management function is performed by the PPDUs and ELMCs. During flight, the PPDUs and ELMCs monitor the status control logic signals, flight phase signals, power channel status, and the current default status of control devices. They then solve the power request equation. Along with the SSPC/Contactor failure status signal, the load shed signal from BPCU, and the super control signal from the pilot, the PPDUs and ELMCs will solve the load control equation. Finally, each load will be determined to get power according to the result of the load control equation. The whole process is performed automatically.

To make it clear, the author just takes the load management process during cruise flight phase as a case study. Table 5-3 shows the loads priority levels list at cruise flight phase. The corresponding loads are shown in appendix A.

**Table 5- 3 Loads Priority Levels at Cruise Flight Phase**

| Priority Levels | Control Devices | Loads | Channel | Voltage (AC/DC) | Power Requirement (kW/kVA) |
|---|---|---|---|---|---|
| ⋮ | | | | | |
| **31** | SSPC1 | Ice inspection lights | R | 28VDC | 0.3 |
| **32** | SSPC2 | Cabin lights | R | 28VDC | 1.5 |
| **33** | SC1 | Heater (lavatory) | R | 115VAC | 5 |
| **34** | SSPC3 | Sat system | L | 28VDC | 0.8 |
| **35** | SC2 | Sliding window heat element | R | 115VAC | 1.17 |
| **36** | SC3 | Recirculation fan | L | 230VAC | 6.3 |
| **37** | SC4 | Fixed window heat element | L | 115VAC | 1.86 |
| **38** | SC5 | Wing de-icing heat element | R | 230VAC | 18.07 |
| **39** | SSPC4 | Ram air fan | R | 270VDC | 10 |
| **40** | SSPC5 | PA(PES) | L | 115VAC | 5 |
| **41** | SC6 | Oven (Galley) | L | 115VAC | 2.6 |
| **42** | SC7 | Coffee cattle (Galley) | L | 115VAC | 15 |
| **43** | SC8 | Motor (compressor) | R | 270VDC | 115.4 |
| **44** | SC9 | Waste water mater heater | R | 115VAC | 12.5 |
| **45** | SC10 | Chiller (Galley) | L | 115VAC | 7.8 |

According to the result of load analysis (See Appendix A), the maximum power requirement occurs during the cruise flight phase, which reaches 275.6kW. At this flight phase, the most loads are in operation. If one power generation channel is unavailable, for instance, the generator1 fails, and if APU generator is started to replace generator1 to supply power to left power distribution channel, then the total power capacity of power sources is 120 + 150 = 270 kW, which cannot provide 275.6 kW power. Therefore, some non-essential loads need to be shed. The BPCU1 detects the current of each power generation

channel, and will find the overload in APU generation channel. So after calculation, the BPCU1 will reach a result to shed the load with the lowest priorities, and it can calculate how many loads need to be shed. In this case, the chiller in galley with the priority of 45 will be shed firstly. Then this command is sent to PPDU1, and PPDU1 solves the load control equation, and then switches off SC10 to shed the chiller. After load shedding, the current power requirement is 275.6 – 7.8 = 267.8 kW, which meets the power capacity requirement. The power usage ratio is 267.8/270*100% ≈ 99.2%. Furthermore, if both generator1 and APU generator are unavailable at the same time, the current power capacity of power sources is only 150 kW. To eliminate the overload issue, 275.6 – 150 = 125.6 kW of loads needs to be shed. After calculation, the BPCU1 will reach a result to shed the last three loads with the relatively lowest priorities from 45 to 43, which power requirement is 7.8 + 12.5 + 115.4 = 135.7 kVA. The power usage ratio is (275.6-135.7)/150*100% ≈ 93.27%. In a worse-case scenario, both generator1 and generator2 fail together, only the APU generator is in operation, the only power capacity of the power sources is 120kVA. So there are 275.6 – 120 = 155.6kVA of loads have to be shed. After calculation, the BPCU1 will draw a conclusion to shed the loads with the priority from 45 to 40, which power requirement is 7.8 + 12.5 +115.4 +15 + 2.6 + 5 = 158.3kVA. The power usage ratio is (275.6-158.3)/120*100% ≈ 97.75%.

The BPCU1 knows which generators are in normal operation by monitoring the status of the power sources, and can judge which generator is overloaded and which loads need to be shed to eliminate the overload issues. By using this method, the power capacity of the remaining power sources can be adequately used. This method is much superior to the traditional method (setting load shedding bus bars), which cannot make the best use the available power capacity. One important thing the author needs to mention is that this case study is not a true case, it is also on the basis of the author’s assumption. Even

though, it is adequate to explain the management process and the benefits this management method bringing to the whole aircraft.

If the traditional method of setting load shedding bus bars is adopted, the worst occasion needs to be considered. Therefore, when any overload failure occurs, the most loads need to be shed, because the system could not know the detailed degree of overload. In case of overload failure, at least 158.3kw loads have to be shed. The above three corresponding power usage ratios will be (275.6-158.3)/270*100% ≈ 43.44%, (275.6-158.3)/150*100% ≈ 78.2%, (275.6-158.3)/120*100% ≈ 97.75%. In the two former cases, this method cannot make the best use the remaining power capacity of power sources.

## 5.5 Conclusion

In this chapter, a novel dynamic power distribution management method is brought forward. The load priority levels are set up according to the power capacity of power sources, flight phases and the importance of loads. Then the power request equation is established in accordance with the status logic signals and the default status value under each flight phase. After that, the electric load control equation is established. Finally, the dynamic power distribution management process is analysed in detail. Furthermore, the load management during cruise flight phase is presented as a case study.

By using this dynamic power distribution management method, all electrical loads can be managed efficiently. The power capacity of power supply system can be reduced significantly by using the method of confirming the default status matrix of switch devices based on the detailed load analysis and load allocation. Most importantly, when there is any overload failure, the remaining power capacity of power sources can be used as sufficiently as possible by using the dynamic load management.

# 6 Health Management of Electrical Power System

Since the conception of MEA and AEA is proposed and developed, the power requirement keeps increasing in both military aircraft and civil airplane. This has brought forward a dramatic challenge to the EPS design. How to improve the testability, reliability and maintenance is becoming more and more important, therefore, the effective health management is required in the EPS design of the Flying Crane. Due to the utilisation of dynamic power distribution management method, the health management of EPS is better than before.

## 6.1 Diagnostic Approach

The Dynamic Case-based Reasoning (DCBR) diagnostic approach and the hybrid prognostic methods mentioned in Mr. Tai's thesis are adopted in the health management system of the Flying Crane [45].

The DCBR approach is a particular inference engine of knowledge solutions to solve current issues by using the previous problems. The keep-updating cases are provided over the time. Both qualitative and quantitative reasoning algorithms can be applied on old cases. All previous status, faults and malfunctions of control devices are recorded and stored in a case library of maintenance. The key feature of the dynamic case-based reasoning method is store the statistic data according to various situations in a single case, which is different from storing several cases of a similar configuration. However, how to achieve the complete case base is the biggest challenge of this method. The diagnostic flowchart of using the DCBR method is shown in Figure 6-1.

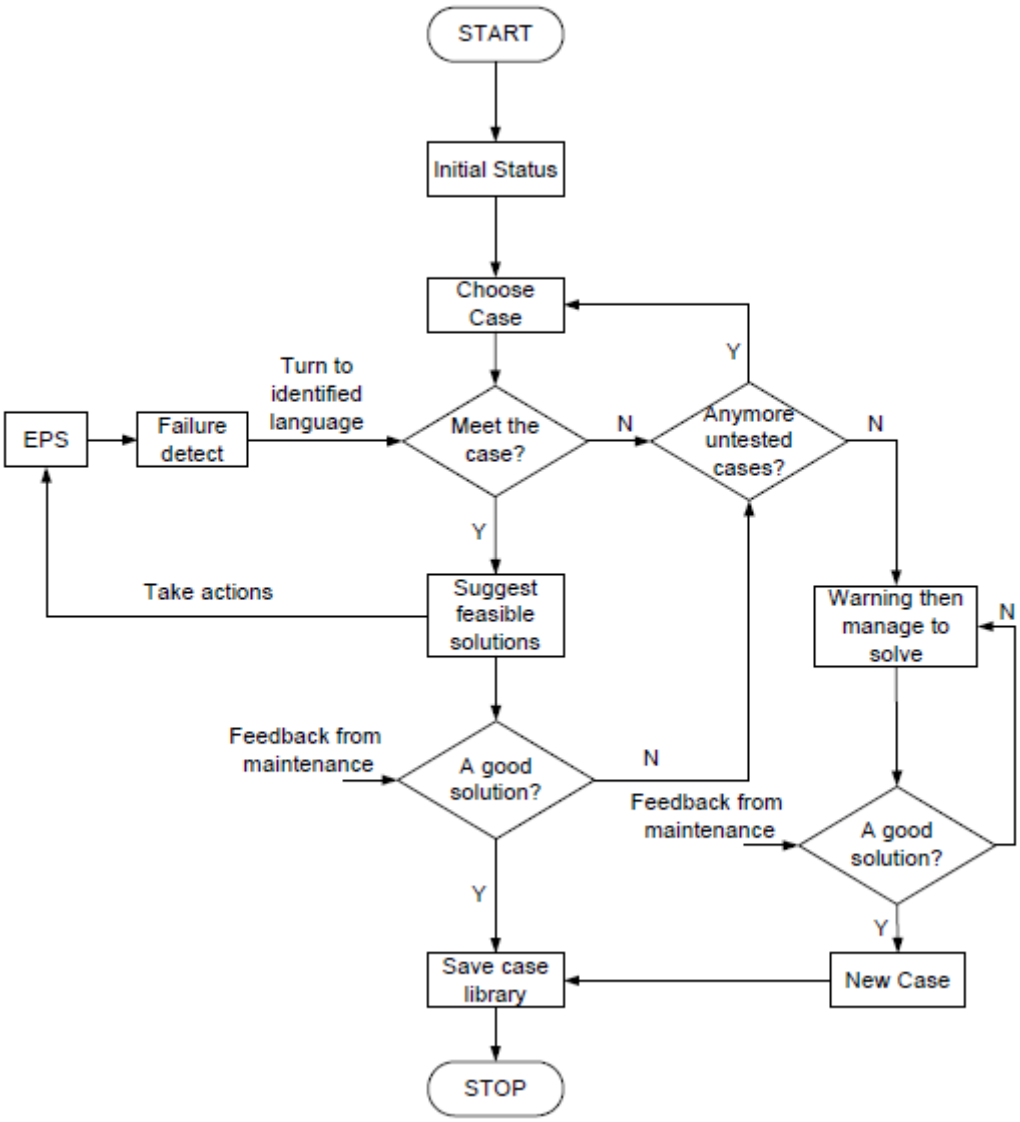


**Figure 6- 1 Diagnostic Flowchart of EPS [46]**

## 6.2 Prognostic Approach

With regard to the prognostic approach, three different methods can be utilised according to various failure symptoms of EPS, which are probability-based approach, data-driven prediction approach and model-based approach. Taking the accuracy and cost into consideration, none of above three methods is good enough for the whole EPS. The combination of them will be chosen to perform the prognostic function at component level. Table 6-1 illustrates the prognostic methods to EPS.

**Table 6- 1 Prognostic Approach to EPS [46]**

| Item | Type | Detection method | Suggested methods |
|---|---|---|---|
| Main Generators, APU Generator, RAT Generator | Electromechanical | Voltmeter, Ammeter, Central Maintenance System (CMS) | Model-based and Data-driven methods |
| GCUs, BPCUs, PPDUs, ELMCs, LTRs,AUTO TRs, HTRs, Static Inverter | Power electronics | Current sensor, Voltage sensor, Thermal sensor | Artificial neural network (one of the Data-driven methods) |
| SCs, SSPCs, Cables and wires, GCBs, BTBs. | Power electronics | CMS | Model simulation (Model-based method) |
| Batteries | Electrochemistry | Current sensor, Voltage sensor, Thermal sensor | Probability-based method |

For the electromechanical equipments, such as main generators and RAT generator, a prognostic model can be established on the basis of their external features, and can be adjusted momentarily in accordance with the historical data.

For the power-electronics devices, such as GCU, BPCU and ELMC, due to their complicated internal circuits and manifold output parameters, it is very difficult to establish a prognostic model. Therefore, one of the data-driven methods- the artificial neural network is a better choice for them.

For the electrochemistry devices-batteries, their healthy status can be predicted with the help of the historical data.

The DPHM system consists of two main parts: the on-board system and the off-board system (See Figure 6-2).

The on-board system is composed of various sensors, signal processing unit, diagnosis and prognosis processing module, database and communication interfaces, and so on.

The off-board system includes a ground support centre to provide the support and make the decision.

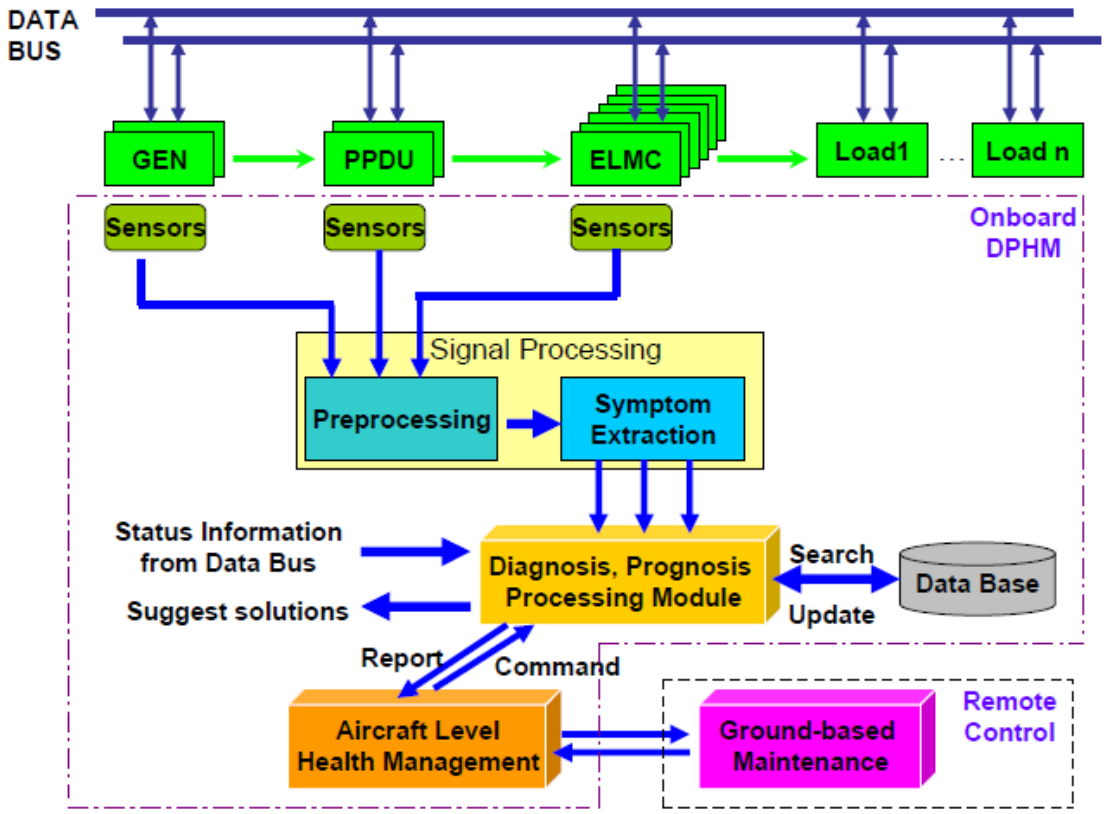


**Figure 6- 2 DPHM Architecture of EPS [46]**

When the EPS is in operation, all the sensors starts to monitor the operational status and detect the abnormal signals. Then all these status and signals are pre-processed through the filtering and noise reduction method. After that, the final status of these signals would be extracted and confirmed. According to the predefined algorithms, the diagnosis and prognosis processing module judges the signals' types to decide which levels they belong to, components faults or incipient failure warning. If it is the component fault, the reason will be diagnosed by the diagnosis and prognosis processing module, and a suggestion to solve this problem will also be given. If it is the incipient failure warning, the diagnosis and prognosis processing module will record and store this information. Finally, all the actions will be sent to the aircraft level health management system to be checked and traced by the maintenance

technicians on ground.

## 6.3 Conclusion

By using the dynamic case-based reasoning diagnostic approach with the capability of fast retrieving the case in database, the maintenance technicians can take effective measures to restore the devices out of operation in a short time. Referring to the compromise of cost and accuracy, three different prognostic approaches are adopted to predict the health status of various components in accordance with their kinds of features.

Above all, the integrated DPHM system could monitor the operational status of EPS in real time, detect and deal with the abnormal signals, diagnose the fault/failure reason correctly and quickly, then bring forward corresponding solutions to the maintenance technicians, send out a warning signal in time if impending failures occur, predict the remaining useful life of equipments. The delay rate of the EPS can be reduced dramatically because the failures are detected and solved in real time. Moreover, the DPHM system can reduce considerable expense on both periodical and unscheduled maintenance.

# 7 Mass Calculation

The weight of the whole aircraft plays an important role to aircraft performance and cost. In AEA, more and more devices are driven by the electrical power. Therefore, the weight of EPS is inevitably increasing. In order to investigate the advantages brought to the EPS by using the dynamic power distribution management system, the mass calculation and comparison has been carried out between the EPS adopting the dynamic power distribution management and the EPS without such intelligent management.

In this thesis, the power-to-weight ratio is adopted d to estimate the mass of EPS on the Flying Crane. And the factor of power-to-weight ratio can be easily found in a few interrelated papers or thesis.

## 7.1 Mass of Electrical Power Components

### 1. Mass of Starter/generator

The power-to-weight ratio is utilised to estimate the mass of the Flying Crane's generators. The author chose the power-to-weight ratio of B787's generator to estimate the mass of the generators on the Flying Crane because of their similar technology. But these two kinds of generators are not the same levels. The mass of the generators on the Flying Crane obtained from this method will greater than the true result actually. But this just has little influence to show the benefit brought by using the dynamic power distribution management method.

Each B787 250kVA VF starter/generator from Hamilton Sundstrand weighs about 200lb [47].

$$250\text{kVA} \approx 90.42\text{kg (200lbs)}$$

The power-to-weight ratio of VF starter/generator is 250/90.42 $\approx$ 2.76 kVA/kg.

$$150kVA / 2.76\ kVA/\ kg \approx 54kg$$

The total mass of the Flying Crane generators is 54 * 2 = 108kg.

**2. Mass of PPDU:**

There are four PPDUs on B787 each weighing 1000lbs. The power generating capacity of B787 is 1450kVA [48].

$$1450kVA \approx 1814kg\ (4000lbs)$$

The power-to-weight ratio of the PPDU of B787 is 1450/1814 $\approx$ 0.8 kg/kVA.

The Flying Crane has a maximum power requirement of 275.6kVA. So the total mass of the Flying Crane PPDUs is 275.6 / 0.8 = 344.5kg.

**3. Mass of Other Components:**

The same method is used on other components. The analysis process is similar. As for BPCU, battery and battery charger, the author just gives the experiential data according to the results in some reference. The mass of cables will be estimated in detail in appendix part.

Table 7-1 shows the mass of the system main components used in the dynamic power distribution management approach. Some of the power-to-weight ratio data in the table are from reference 15.

On the Flying Crane, not all loads are in operation during all flight phases. Which loads need to operate in different flight phases is investigated on the basis of load analysis and default status of the switch devices. According to the result of load requirement analysis and by using the dynamic power distribution management method, the maximum power requirement is obtained, which is 275.6kW and occurs in the cruise flight phase. So the power generating capacity of primary generator can be rated at 150kVA. The total power capacity of EPS is 150 * 2 + 120 = 420kVA. After calculation, the total mass of EPS with the dynamic power distribution management method is

approximately 1503.84kg.

**Table 7- 1 Mass of EPS with Dynamic Power Distribution Management**

| Item | Power Capacity (kW or kVA) | Power-to-Weight Ratio (kW/ kg) or (kVA / kg) | Quantity | Mass (kg) |
|---|---|---|---|---|
| Generator | 150 | 2.76 | 2 | 108.7 |
| APU Generator | 120 | 3.7 [15] | 1 | 32.43 |
| GCU | 150 | 4 [15] | 2 | 75 |
| APU GCU | 120 | 4 [15] | 1 | 30 |
| AUTO TR | 40 | 1.23 [15] | 2 | 65.04 |
| LTR | 40 | 4 [15] | 2 | 20 |
| HTR | 100 | 4 [15] | 2 | 50 |
| Static Inverter | 10 | 0.97 [15] | 1 | 10.31 |
| DC-DC Converter | 65 | 0.42 [15] | 1 | 154.76 |
| BPCU | — | — | 2 | 30 |
| PPDU | 137.8 | 0.8 | 2 | 344.5 |
| ELMC | 20 | 0.8 | 6 | 150 |
| Battery | — | — | 2 | 80 |
| Battery Charger | — | — | 2 | 7 |
| Feeder | — | — | — | 346.31 |
| Total | | | | 1503.84 |

The mass calculation of EPS without adopting the dynamic power distribution management approach is shown in table 7-2.

If the dynamic power distribution management method is not adopted, the maximum power capacity of all loads is about 374.4kw (See Appendix A Table A-1). It has to be taken into consideration that all loads could be in operation in some time of the whole flight. Therefore, the power capacity of the main generator has to be increased to 200 kVA. The total power capacity of EPS would be 200 * 2 + 120 = 520 kVA. The mass of main generators would be increased from 108.7 kg to 144.93 kg. And the mass of PPDUs would also be increased from 344.5 kg to 468 kg. After calculation the total mass of EPS without the intelligent management method is about 1688.78kg.

**Table 7- 2 Mass of EPS without Dynamic Power Distribution Management**

| Item | Power Capacity (kW or kVA) | Power-to-Weight Ratio (kW/ kg) or (kVA / kg) | Quantity | Mass (kg) |
|---|---|---|---|---|
| Generator | 200 | 2.76 | 2 | 144.93 |
| APU Generator | 120 | 3.7 [15] | 1 | 32.43 |
| GCU | 200 | 4 [15] | 2 | 100 |
| APU GCU | 120 | 4 [15] | 1 | 30 |
| AUTO TR | 40 | 1.23 [15] | 2 | 65.04 |
| LTR | 40 | 4 [15] | 2 | 20 |
| HTR | 100 | 4 [15] | 2 | 50 |
| Static Inverter | 10 | 0.97 [15] | 1 | 10.31 |
| DC-DC Converter | 65 | 0.42 [15] | 1 | 154.76 |
| BPCU | — | — | 2 | 30 |
| PPDU | 187.2 | 0.8 | 2 | 468 |
| ELMC | 20 | 0.8 | 6 | 150 |
| Battery | — | — | 2 | 80 |
| Battery Charger | — | — | 2 | 7 |
| Feeder | — | — | — | 346.31 |
| Total | | | | 1688.78 |

Both results are based on the same baseline aircraft. The main difference is the capacity of the main generators. The power capacity of the primary generators with the intelligent management method is 300kw in total, while the power capacity of the primary generators without the advanced management approach is 400kw, which leads to the different mass of generators directly.

The mass of generators in the second EPS is about 36kg heavier than that in the first EPS. Most importantly, the mass of PPDUs increases about 123.5kg. The entire mass increase is around 185kg. The mass changing on other components is slight, and has a little influence on the mass of the whole EPS. Above all, about 185kg is reduced successfully from the EPS by using this intelligent dynamic power distribution management approach.

## 7.2 Mass of wiring

Due to the adoption of PPDU and ELMC form of power distribution as well as the utilisation of high voltage loads on the Flying Crane, a dramatic reduction on the wire count and weight was achieved. The total estimated mass of cables and wires was 277.05kg. Refer to Appendix B-1.

While the mass of additional weight of connectors and cabling from ELMC to miscellaneous equipments was estimated at 69.26 kg, which is approximately 20% of the total weight of wiring.

So the total weight of wiring including the connectors is 277.05 + 69.26 = 346.31kg.

## 7.3 Conclusion

In order to highlight the mass saving brought to the EPS by using the dynamic power distribution management method, the mass of main EPS components is estimated by adopting the power density method. The mass effect this intelligent method brings to the EPS is analysed and evaluated in detail. About 185kg of mass is saved by using this novel approach compared to the EPS without such application.

Because of the limited information, the result of mass calculation is not accurate. But it is enough to explain the benefit of mass reduction brought by using this advanced method.

# 8 Final Conclusions

It looks increasingly likely that the AEA will be the development trend in the aeronautics field. Thanks to the rapid development in the electric motor, power electronics and energy storage techniques, the MEA and AEA are not a dream. The age of more-electric and even all-electric is coming.

In AEA, all the systems (including ECS, IPS, actuation system, FCS, galley system, avionics system and electrical system) onboard will be driven by only one type of power: the electricity. As a result, the power requirement of all these systems will inevitably increase dramatically. How to control and manage so many electrical loads effectively in real time is becoming more and more important. The features and power requirements of all loads on the Flying Crane-a typical 150 pax MEA are investigated in detail.

Different power management methods of different aircraft were analysed and compared. On A320, the load management was very simple. The shedding bus bars were adopted to manage some non-essential loads on failure conditions. The control of this method is simple and practical, but its flexibility is poor, and could not take full advantage of the remaining power capacity. B777 is the first aircraft adopting the ELMS. This system is relatively more advanced than any other equivalent systems of the same age. The most advanced feature of this approach is the sophisticated load shedding and load optimization function. But how to manage more electrical loads and larger power loads needs further investigation. The active power management method on the Flying Crane of the first Cohort was brought forward two yeas ago. By using time-sharing and power sharing strategy, this method might save significant power usage of power sources. The focal point of this method rests on the power management, while the concrete load management is not analysed in detail.

With regard to the dynamic power distribution management for AEA, in this

thesis a novel power distribution management method was developed. The detailed default status matrix of all switch devices was investigated, and the corresponding power request equation and load control equation were established. This method has important referential value for the power distribution system design. By using this method, the capacity of the generators could be reduced fabulously from 520kVA to 420kVA which could also contribute much to the mass reduction. When on failure conditions, this management method can make the full advantage of the remaining power capacity of the power sources to fulfill as many as flight missions and make the passengers feel more comfortable and safer. Moreover, the testability and maintenance of the electrical system are also increased dramatically. A case study was performed to estimate the dynamic power distribution management method. Although the power requirements and operating status of some systems and loads are not accurate, the methodology is effective and acceptable.

The most effective way to get the closely factual data during each flight phase is to establish a simulation model and to do the simulating experiments. Due to the limited time, this goal could not be achieved. Seven typical and important flight segments-ground, take off, climb, cruise, loiter, descend and landing are chosen to be investigated in detail. This method has high flexibility and excellent expandability, and can be applied to different aircraft with various power generation channels.

# 9 Future Work

Firstly, in the following work, the further detailed power requirement of all electrical loads needs to be analysed thoroughly and carefully. In this thesis, the detailed load management practice has not been provided. The author only brings forward a top methodology of the dynamic power distribution management.

Furthermore, a typical mathematical model and a semi-physical model at aircraft level need to be established to test the performance and function of this management system under various failure conditions. The ultimate target of this thesis is to provide a dynamic power distribution management method with high-efficiency and high flexibility to control and manage the whole electrical power system and all electrical loads. The simulation test is necessary to access and verify the rationality of the control logic and the validity of the management methodology mentioned in this thesis.

Finally, some other management strategies of the power distribution system need to be taken into consideration. In this thesis, to fulfill the closed loop control function of the dynamic power distribution management, much more management functions are integrated into the BPCU, and the reliability requirement of the BPCU must be pretty high. If the BPCU fails, the whole power distribution management system will unavoidably break down. Therefore, two BPCUs are utilised in this system to improve the functional reliability, and each one of them can backup for the other. Maybe the control and management functions can be integrated into the PPDUs and ELMCs to relieve the pressure of BPCUs. The detailed management strategy needs to be investigated carefully and thoroughly. The features of these different methods need to be compared in detail.

## REFERENCES


[1] Joseph A. Weimer , “Electrical Power Technology for the More Electric Aircraft”, Wright Patterson AFB, OH 45433-7658.

[2] Cronin, M. J. J. (1990), "The all-electric aircraft", IEE Review, vol. 36, no. 8, pp. 309-311.

[3] Rosero, J.A., Ortega, J. a., Aldabas, E., & Romeral, L, (2007), “Moving towards a more electric aircraft”, Aerospace and Electronic Systems Magazine, IEEE, vol: 22, Issue: 3, Page(s):3-9.

[4] Group Design Report: The Flying Crane Specifications, (2008), Cranfield University, Cranfield.

[5] Zhang, H.; Saudemont, C.; Robyns, B.; Petit, M. (2008), “Comparison of Technical Features between a More Electric Aircraft and a Hybrid Electric Vehicle”. Vehicle Power and Propulsion Conference, VPPC '08. IEEE.

[6] Mike Sinnett, “787 No- Bleed Systems: Saving Fuel and Enhancing Operational Efficiencies”. AERO magazine, Issue 28_Quarter 04 | 2007

[7] Cutts, S. J. (2002), "A collaborative approach to the More Electric Aircraft", Power Electronics, Machines and Drives, 2002. International Conference on (Conf. Publ. No. 487), , pp. 223-228.

[8] Maldonado, M. A., Shah, N. M., Cleek, K. J., Walia, P. S. and Korba, G. J. (1997), "Power Management and Distribution System for a More- Electric Aircraft (MADMEL)-program status", Energy Conversion Engineering Conference, 1997. IECEC-97., Proceedings of the 32nd Intersociety, Vol. 1, pp. 274.

[9] Moir, I. and Seabridge, A. G. (2008), “Aircraft systems: mechanical, electrical, and avionics subsystems integration”, 3rd Ed, Wiley, Chichester, West Sussex, England; Hoboken, NJ.

[10] Weimer, J. A. (14~17 January 2002), "Power Electronics in the More Electric Aircraft", 40'AIAA Aerospace Sciences Meeting and Exhibit.

[11] Emadi, K. and Ehsani, M., (2000), “Aircraft power systems: technology, state of the art, and future trends”. Aerospace and Electronic Systems Magazine, IEEE.

[12] Mike Bailey (2009), “Protection and Switching of Large Loads for the More Electric Aircraft”. EPE 2009 Conference, Barcelona.

[13] L. Faleiro; “Initial Research towards a More Electrical Aircraft”, More Electrical Aircraft Conference, Royal Aeronautics Society, RAeS, April 2004.

[14] Norman, P.J.; Galloway, S.J.; Burt, G.M.; Trainer, D.R.; Hirst, M.; (2008), “Transient Analysis of the More-Electric Engine Electrical Power Distribution Network”. Power Electronics, Machines and Drives, 2008. PEMD 2008. 4th IET Conference on Publication Year: 2008, Page(s): 681 - 685

[15] Lei, Fu and Dr. Craig, P. Lawson (2008), “Active Power Management for All- Electric Aircraft”. Cranfield University, School of Engineering.

[16] Richard Newman [Rolls–Royce plc Derby, UK] (2004), “The More Electric Engine Concept”.
Available at:
http://www.sae.rog/technical/papers/2004-01-3128
(Accessed: July 2010)

[17] Boeing Company (2006), A Quarterly Publication/commercial/aero magazine.
Available at:
http://www.boeing.com/commercial/aeromagazine/articles/qtr_4_06/AERO_Q406.pdf
(Accessed: July 2010)

[18] Stephen, L. Botten; Chris, R. Whitley and Andrew, D. King-TRW Aeronautical Systems (2000), Flight Control Actuation Technology fro Next- Generation All-Electric Aircraft
Available at:

http://www.ms.northropgrumman.com/PDFs/TRJ/TRJ-2000/FW/00FW_Botten.pdf
(Accessed: August 2010)

[19] Moir, I. (1999), "More-electric aircraft-system considerations", Electrical Machines and Systems for the More Electric Aircraft (Ref. No. 1999/180), IEE Colloquium on, , pp. 10/1-10/9.

[20] Cutts, S. J. (2002), "A collaborative approach to the More Electric Aircraft", Power Electronics, Machines and Drives, 2002. International Conference on (Conf. Publ. No. 487), , pp. 223-228.

[21] AJIT SINGH PANESAR and Dr. Craig, P. Lawson (2007-08), “Actuation System and Secondary Power System”. Cranfield University, School of Engineering.

[22] Botten, S. L., Whitley, C. R. and King, A. D. (2000), "Flight Control Actuation Technology for Next-Generation All-Electric Aircraft", Technology review, pp. 55.

[23] M. Howse (2003), "All electric aircraft", Power Engineer, vol. 17, no. 4, pp. 35-37.

[24] Mike Howse, (2003), All Electric Aircraft, IEE Power Engineer.

[25] Dornheim, M. A. (2005), "Electric Cabin: The 787 generates at least four times more electricity than normal. Traditionally bleed-powered systems now use volts", Aviation Week & Space Technology, March, vol. 28.

[26] Maldonado, M.A., Shah, N.M., Cleek, K.J., Walia, P.S. vol.11, no.10, pp. 17-24. and Korba, G.J., August 1997, “Power Management and Distribution System for a More Electric Aircraft (MADMEL) -Program Status”, Proc. of the 32nd Intersociety Energy Conversion Engineering Conf., pp. 274-279.

[27] D. Izquierdo, A. Barrado, C. Raga, M. Sanz, P. Zumel, A. Lázaro (2008), “Protection devices for aircraft electrical power distribution systems: a survey”. Industrial Electronics, IECON 2008. 34th Annual Conference of IEEE.

[28] Faleiro, L. F., “Trends Towards a More Electrical Aircraft”, Proc. ICAS 2006.

[29] Blanding, D., “Subsystem Design and Integration for the More Electric Aircraft”. Proc. ICAS 2006.

[30] Kankam, M. D., “A Survey of Power Electronics Applications in Aerospace Technologies”. 36th Intersociety Energy Conversion Engineering Conference cosponsored by the ASME, IEEE, AICHE, ANS, SAE, and AIAA Savannah, Georgia, July 29-August 2, 2001.

[31] Weimer, J. A., “Power Management and Distribution for the More Electric Aircraft”. Proceedings of the 30th Intersociety Energy Conversion Engineering Conference, 1995: 273-277.

[32] AMC-Plane Talk. Aeronautical Radio INC. Maryland (United States). Industry Highlights. “Electrical Protection Devices”. Volume XVI, N.º 2. February 2005.

[33] AS33201, “CIRCUIT BREAKER-AIRCRAFT, TRIP-FREE, PUSH PULL, 1/2 THRU 20 AMPS, TYPE 1 -55 THRU +121 ºC”. SAE The engineering Society for Advancing Mobility Land Sea Air and Space International. Rev. 31- AUG-99. Web available: http//www.sae.org

[34] Furse, C., “Finding Fault: Locating Hidden Hazards on Aircraft Wiring”. College of Engineering, University of Utah. February 2004.

[35] Liu, W.; Huang, A.Q.. “A Novel High Current Solid State Power Controller”. Dept. of Electr. & Comput. Eng., North Carolina State Univ., Raleigh, NC, USA; Industrial Electronics Society, 2005. IECON 2005. 32nd Annual Conference of IEEE. Publication Date: November 6-10, 2005.

[36] Kinoshita, R. Y., “Solid State DC Power Switch”. Rockwell International Corporation. Patent Number: 4709160. United States Patent. November 24, 1987.

[37] Friedman, S. N., “Solid-state Power Controller for the Next Generation”. Aerospace and Electronic Systems Magazine, IEEE Volume 7, Issue 9,

September 1992: 24-29.

[38] Potter, F. J. and Furmanski, D., “Retrofitting Solid State Power Distribution into Existing Aircraft”. 9th Joint FAA/DoD/NASA Aging Aircraft Conference 2006.

[39] Maxwell, J. M.; Blumer, J. H. and Burden, B., “A Configurable Solid State Power Management and Distribution System”. Power Systems Conference. Society of Automotive Engineers, Inc.; October 2002.

[40] Avionics Magazine. Access Intelligence. Potomac (United States). Tech Report; “Secure Power with Next-Generation PDSUs”. Volume 29, N.º6. ISSN- 1085-9284. June 2005.
Available at:
http://www.avionicsmagazine.com
(Accessed: September 2010)

[41] SMART COCKPIT. “A319/A320/A321 Electrical”.
Available at:
http://www.smartcockpit.com/pdf/plane/airbus/A320/systems/0037/
(Accessed: September 2010)

[42] SMART COCKPIT. “Boeing 777 Electrical”.
Available at:
http://www.smartcockpit.com/pdf/plane/boeing/B777/systems/0005/
(Accessed: October 2010)

[43] Kamiar J. Karimi, PhD Senior Techical Fellow The Boeing Company, (2007), “Futrure Aircraft Power Systems- Integration Challenges”.

[44] Andrade, L. and Tenning, C. (1992), "Design of Boeing 777 electric system", Aerospace and Electronic Systems Magazine, IEEE, vol. 7, no. 7, pp. 4-11.

[45] CCAR25, Airworthiness Standards: Transport Category Airplanes. China Civil Aviation Regulation, 2001 (Civil Aviation Administration of China (CAAC)).

[46] Zhongtian Tai and Dr. C. P. Lawson (2009), “Aircraft Electrical Power

System Diagnostic, Prognostic and Health Management". Cranfield University, School of Engineering.

[47] Michael A. Dornheim, "Massive 787 Electrical System Pressurizes Cabin".

Available at:

http://www.aviationweek.com/aw/generic/story_generic.jsp?channel=awst&id=news/03285p06.xml

(Accessed: November 2010)

[48] Michael A. Dornheim , Massive 787 Electrical System Pressurizes Cabin. Available at:
http://www.aviationweek.com/aw/generic/story_generic.jsp?channel=awst&id=news/03285p06.xml

(Accessed: November 2010).

[49] Harkeem Sarki and Dr.C.P. Lawson, Secondary Power System of A-8 Advanced Regional Airliner (2009), Cranfield University, School of Engineering.

# APPENDIX A – LOAD STATISTICS

**Table A- 1 Load Requirement of the Flying Crane**

| Systems | Equipments | Voltage(AC/DC) | Working Period(continuous/temporary) | | | | | | | Vital/ Essential/ Non-essential | Power Capacity |
|---|---|---|---|---|---|---|---|---|---|---|---|
| | | | Ground | Take off | Climb | Cruise | Descend | Loiter | Landing | | |
| EPS | Primary power distribution unit(2) | 28VDC | 1 | 1 | 1 | 1 | 1 | 1 | 1 | V | 1 |
| | Electric load management centre(6) | 28VDC | 1.2 | 1.2 | 1.2 | 1.2 | 1.2 | 1.2 | 1.2 | V | 1.2 |
| | GCU1/GCU2/AGCU/EPMU/EGCU | 28VDC | 1 | 1 | 1 | 1 | 1 | 1 | 1 | E | 1 |
| ECS | Miscellaneous | 28VDC | 5 | 5 | 5 | 5 | 5 | 5 | 5 | E | 5 |
| | Motor(compressor) | 270VDC | 110 | 0 | 110 | 115.4 | 110 | 110 | 0 | N | 115.4 |
| | Ram air Fan | 270VDC | 20 | 0 | 10 | 10 | 10 | 10 | 0 | N | 20 |
| | Recirculation Fan | 230V AC | 6.3 | 0 | 6.3 | 6.3 | 6.3 | 6.3 | 0 | N | 6.3 |
| IPS | Ice detector (2) | 115VAC | 0.27 | 0.27 | 0.27 | 0.27 | 0.27 | 0.27 | 0 | E | 0.27 |
| | | 28VDC | 0.007 | 0.007 | 0.007 | 0.007 | 0.007 | 0.007 | 0 | E | 0.007 |
| | Windshield heat element (2) | 115VAC | 0 | 3.895 | 3.895 | 3.895 | 3.895 | 3.895 | 0 | E | 3.895 |
| | | 115VAC | 1.298 | 1.298 | 1.298 | 1.298 | 1.298 | 1.298 | 0 | E | 1.298 |
| | Sliding window heat element (2) | 115VAC | 1.172 | 1.172 | 1.172 | 1.172 | 1.172 | 1.172 | 0 | N | 1.172 |
| | Fixed window heat element (2) | 115VAC | 1.86 | 1.86 | 1.86 | 1.86 | 1.86 | 1.86 | 0 | N | 1.86 |
| | Window heat computer (2) | 28VDC | 0.032 | 0.032 | 0.032 | 0.032 | 0.032 | 0.032 | 0.032 | E | 0.032 |
| | Window temperature sensors (6) | 28VDC | 0.003 | 0.003 | 0.003 | 0.003 | 0.003 | 0.003 | 0 | E | 0.003 |

| Systems | Equipments | Voltage(AC/DC) | Working Period(continuous/temporary) | | | | | | | Vital/ Essential/ Non-essential | Power Capacity |
|---|---|---|---|---|---|---|---|---|---|---|---|
| | | | Ground | Take off | Climb | Cruise | Descend | Loiter | Landing | | |
| | Nacelle Anti-icing Valve | 28VDC | 0 | 0.084 | 0.084 | 0.084 | 0.084 | 0.084 | 0 | E | 0.084 |
| | Nacelle Anti-icing Temperature Switch | 28VDC | 0 | 0.001 | 0.001 | 0.001 | 0.001 | 0.001 | 0 | E | 0.001 |
| | Nacelle Anti-icing Pressure Switch | 28VDC | 0 | 0.001 | 0.001 | 0.001 | 0.001 | 0.001 | 0 | E | 0.001 |
| | Wing de-icing heat element (2) | 230VAC | 0 | 0 | 18.068 | 18.068 | 18.068 | 18.068 | 0 | N | 18.068 |
| | Wing de-icing computer (2) | 28VDC | 0.09 | 0.09 | 0.09 | 0.09 | 0.09 | 0.09 | 0.09 | E | 0.09 |
| | Wing temperature sensors (8) | 28VDC | 0 | 0.003 | 0.003 | 0.003 | 0.003 | 0.003 | 0.003 | E | 0.003 |
| | Windshield wiper (2) | 28VDC | 0.9 | 0.9 | 0.9 | 0.9 | 0.9 | 0.9 | 0.9 | E | 0.9 |
| FCS | Actuator Control Electronics(4) | 28VDC | 1 | 1 | 1 | 1 | 1 | 1 | 1 | E | 1 |
| Surveillance System | Weather Radar | 28VDC | 0 | 0 | 0.8 | 0.8 | 0.8 | 0.8 | 0 | E | 0.8 |
| | EGPWS | 28VDC | 0 | 0.5 | 0.5 | 0.5 | 0.5 | 0.5 | 0.5 | E | 0.5 |
| | TCAS | 28VDC | 0 | 0.3 | 0.3 | 0.3 | 0.3 | 0.3 | 0.3 | E | 0.3 |
| Navigation System | ADIRS | 115VAC | 0.12 | 0.12 | 0.12 | 0.12 | 0.12 | 0.12 | 0.12 | E | 0.12 |
| | GPS/ILS Receiver | 115VAC | 0.08 | 0.08 | 0.08 | 0.08 | 0.08 | 0.08 | 0.08 | E | 0.08 |
| | ADF Receiver | 115VAC | 0.08 | 0.08 | 0.08 | 0.08 | 0.08 | 0.08 | 0.08 | E | 0.08 |
| | VOR/Marker Receiver | 115VAC | 0.06 | 0.06 | 0.06 | 0.06 | 0.06 | 0.06 | 0.06 | E | 0.06 |
| | DME | 28VDC | 0.06 | 0.06 | 0.06 | 0.06 | 0.06 | 0 | 0.06 | E | 0.06 |
| Cockpit and Display System | Display unit(heater off) | 28VDC | 0.12 | 0.12 | 0.12 | 0.12 | 0.12 | 0.12 | 0.12 | E | 0.12 |
| | Display unit(heater on) | 28VDC | 0.27 | 0.27 | 0.27 | 0.27 | 0.27 | 0.27 | 0.27 | E | 0.27 |
| | Head-up Display | 115VAC | 0.2 | 0.2 | 0.2 | 0.2 | 0.2 | 0.2 | 0.2 | E | 0.2 |
| Communication | HF system | 28VDC | 1.5 | 1.5 | 1.5 | 1.5 | 1.5 | 1.5 | 1.5 | E | 1.5 |

| Systems | Equipments | Voltage(AC/DC) | Working Period(continuous/temporary) | | | | | | | Vital/ Essential/ Non-essential | Power Capacity |
|---|---|---|---|---|---|---|---|---|---|---|---|
| | | | Ground | Take off | Climb | Cruise | Descend | Loiter | Landing | | |
| System | VHF system | 28VDC | 1.2 | 1.2 | 1.2 | 1.2 | 1.2 | 1.2 | 1.2 | E | 1.2 |
| | Miscellaneous | 28VDC | 0.8 | 0.8 | 0.8 | 0.8 | 0.8 | 0.8 | 0.8 | E | 0.8 |
| | Sat system | 28VDC | 0.8 | 0.8 | 0.8 | 0.8 | 0.8 | 0.8 | 0.8 | N | 0.8 |
| | PA(PES) | 115VAC | 0 | 0 | 0 | 5 | 0 | 0 | 0 | N | 5 |
| Cabin Equipments | Evacuation equipments | 28VDC | 1 | 0 | 0 | 0 | 0 | 0 | 0 | V | 1 |
| | Light | 28VDC | 1.5 | 1.5 | 1.5 | 1.5 | 1.5 | 1.5 | 1.5 | N | 1.5 |
| | Cargo Door Actuator | 270VDC | 2 | 0 | 0 | 0 | 0 | 0 | 0 | N | 2 |
| | Heater(Lavatory) | 115VAC | 0 | 0 | 0 | 5 | 0 | 0 | 0 | N | 5 |
| | Coffee Kettle (Galley) | 115VAC | 0 | 0 | 0 | 15 | 0 | 0 | 0 | N | 15 |
| | Chiller (Galley) | 115VAC | 0 | 0 | 0 | 7.8 | 0 | 0 | 0 | N | 7.8 |
| | Oven (Galley) | 115VAC | 0 | 0 | 0 | 2.6 | 0 | 0 | 0 | N | 2.6 |
| | Waste Water Master Heater | 115VAC | 0 | 0 | 0 | 12.5 | 0 | 0 | 0 | N | 12.5 |
| Propulsion System | APU starter | 28VDC | 10 | 0 | 0 | 0 | 10 | 0 | 0 | E | 10 |
| External Lighting | Emergency lights | 28VDC | 0.2 | 0 | 0 | 0 | 0 | 0 | 0 | V | 0.2 |
| | Anti-Collision Beacons | 28VDC | 0.3 | 0.3 | 0.3 | 0.3 | 0.3 | 0.3 | 0.3 | E | 0.3 |
| | Landing/Taxiing lights | 28VDC | 0.85 | 0 | 0 | 0 | 0 | 0 | 0.85 | E | 0.85 |
| | Navigation Lights | 28VDC | 0.2 | 0.2 | 0.2 | 0.2 | 0.2 | 0.2 | 0.2 | E | 0.2 |
| | Ice inspection lights | 28VDC | 0.3 | 0.3 | 0.3 | 0.3 | 0.3 | 0.3 | 0.3 | N | 0.3 |
| Fire Protection System | Miscellaneous | 28VDC | 0.4 | 0.4 | 0.4 | 0.4 | 0.4 | 0.4 | 0.4 | V | 0.4 |
| Flight Data | Flight data record unit | 28VDC | 0.2 | 0.2 | 0.2 | 0.2 | 0.2 | 0.2 | 0.2 | V | 0.2 |

| Systems | Equipments | Voltage(AC/DC) | Working Period(continuous/temporary) | | | | | | | Vital/ Essential/ Non-essential | Power Capacity |
|---|---|---|---|---|---|---|---|---|---|---|---|
| | | | Ground | Take off | Climb | Cruise | Descend | Loiter | Landing | | |
| Record System | | | | | | | | | | | |
| Landing Gear System | Nose Wheel Steering System | 270VDC | 0 | 3.8 | 0 | 0 | 0 | 0 | 3.8 | E | 3.8 |
| | Breaking System | 270VDC | 27.4 | 0 | 0 | 0 | 0 | 0 | 27.4 | E | 27.4 |
| | Parking Brake | 28VDC | 0.1 | 0 | 0 | 0 | 0 | 0 | 0 | N | 0.1 |
| Avionic Network | Cabinet+Switch | 28VDC | 3.05 | 3.05 | 3.05 | 3.05 | 3.05 | 3.05 | 3.05 | E | 3.05 |
| Actuation System | LG actuator | 115VAC | 0 | 8 | 0 | 0 | 0 | 0 | 8 | E | 8 |
| | Rudder actuators | 270VDC | 1.62 | 4.4 | 4.4 | 4.4 | 4.4 | 4.4 | 1.62 | V | 4.4 |
| | Elevator actuators | 270VDC | 2.51 | 6.8 | 6.8 | 6.8 | 6.8 | 6.8 | 6.8 | E | 6.8 |
| | Horizontal Stabilizer | 270VDC | 0 | 1.56 | 1.56 | 1.56 | 1.56 | 1.56 | 1.56 | V | 1.56 |
| | Aileron actuators | 270VDC | 0 | 3.52 | 3.52 | 3.52 | 3.52 | 3.52 | 0 | E | 3.52 |
| | Hight lift actuators | 270VDC | 6.76 | 19.2 | 19.2 | 0 | 19.2 | 19.2 | 6.76 | N | 19.2 |
| | Spoiler actuators | 270VDC | 0 | 0 | 0 | 18 | 0 | 0 | 0 | E | 18 |
| Fuel System | Pump, Valves | 270VDC | 3 | 0 | 0 | 0 | 0 | 0 | 0 | E | 3 |
| | Pump, Valves | 270VDC | 0 | 12 | 12 | 12 | 12 | 12 | 12 | E | 12 |
| | Thrust Reverse | 115VAC | 0 | 0 | 0 | 0 | 0 | 0 | 13.3 | N | 13.3 |
| Total | | | 195.41 | 90.13 | 223.50 | 275.60 | 233.50 | 231.44 | 96.35 | | 374.4 |

# APPENDIX B – MASS ESTIMATION OF WIRING

The following steps were taken to calculate the weight of the cables.

**1.** Identify the relative positions of the components the cable runs:

**From generator1 to the PPDU1**

**2.** Find out the relative distance between these two components:

Based on the CAD model, the distance between the main generator and PPDU can be measured. The CGs of these two components are:

**PPDU1 (19100,-330,-665.053), Main generator1 (13521.5,-5900,-2165)**

**So: L ≈ 18 m**

**3.** Find out the number of cables running between these two components:

As the main power type is 230V, variable frequency. 3φ，So, N=3

**4.** Calculate the power to be transmitted:

According to the load analysis, the maximum power requirement for the continuous operating loads is 275.604KVA. For the sake of simplicity, it is assumed that each generator provides half of the total power which is required by all the loads. So:

**P= 137.802KVA**

**5.** Calculate the power per cables runs:

It is assumed that the system is three phases equilibrium. So:

**P1=P/3=45.934KVA**

**6.** Calculate the voltage drop:

For the generator cable, it is considered that the point of regulation (POR) locates at the input terminal of the GCB. So the voltage achieved at the end of this cable is the nominal value:

**U=230V**

Except for these generator cables, 1 % voltage drop is taken into account for the cables which runs from PPDU to ELMC and 0.5% is considered for the cable which runs from ELMC to each load.

**7.** Find out the current carried by each conductor:

**I= P1/ U= 45934/230= 199.713A**

**8.** Choosing the standard cable which meets the current required:

From the reference table Table-1, we can find that AWG-0 can meet the requirement.

**9. Calculate the mass of each cable:**

Using the formula: W=length of cable × (mass/length) of standard cable. Based on the reference Table- 1, the (mass/length) of the required cable can be found.

**So, W1 = (18/1000) × 513.4 = 9.2412kg**

**10.** Calculate the mass of the total cables which runs from generator1 to PPDU1:

Since the main power source is 230V three-phase system. So the total weight of the cables runs from generator to PPDU equals to the mass of single phase cable multiply by three.

Another aspect need to be concerned is the cable used for ground return. Since the composite material has been used in the wing structure, so the same size cable as single phase's is chosen for ground return.

**So, W= W1×4 = 9.2412×4 = 36.965kg**

## Table B- 1 Reference table [49]

| S/No | Item # | Conductor Size (AWG) | Stranding | Conductor Diameter Max.(mm) | Insulation Diameter Max.(mm) | Current Carrying Capacity (Amps) | Max. Resistance in Ω/km (Ω/km) @ 20°C | Max. WT (lbs/1000') | Max. WT. kg/km |
|---|---|---|---|---|---|---|---|---|---|
| 1 | M22759/87-04 | [0000] | 2109/30 | 15.37 | 16 | 395 | 0.177 | 681 | 1013 |
| 2 | M22759/87-03 | [000] | 1665/30 | 13.72 | 14.22 | 335 | 0.233 | 542 | 806.5 |
| 3 | M22759/87-02 | [00] | 1330/30 | 12.09 | 12.83 | 285 | 0.292 | 432 | 642.8 |
| 4 | M22759/87-0 | [0] | 1045/30 | 10.8 | 11.43 | 243 | 0.371 | 345 | 513.4 |
| 5 | M22759/87-1 | 1 | 817/30 | 9.65 | 10.36 | 210 | 0.472 | 289 | 430 |
| 6 | M22759/87-2 | 2 | 665/30 | 8.64 | 9.25 | 179 | 0.581 | 223 | 331.8 |
| 6 | M22759/87-4 | 4 | 133/25 | 6.81 | 7.32 | 133 | 0.902 | 143 | 212.8 |
| 7 | M22759/87-6 | 6 | 133/27 | 5.38 | 5.82 | 97 | 1.43 | 88.3 | 131.4 |
| 9 | M22759/87-8 | 8 | 133/29 | 4.29 | 4.78 | 71 | 2.28 | 57.6 | 85.71 |
| 10 | M22759/87-10 | 10 | 37/26 | 2.84 | 3.23 | 32 | 4.07 | 31.4 | 46.72 |
| 11 | M22759/87-12 | 12 | 37/28 | 2.27 | 2.67 | 25 | 6.49 | 20.1 | 29.91 |
| 12 | M22759/87-14 | 14 | 19/27 | 1.76 | 2.18 | 18 | 9.84 | 12.95 | 19.27 |
| 13 | M22759/87-16 | 16 | 19/29 | 1.41 | 1.85 | 14 | 15.6 | 8.6 | 12.8 |
| 14 | M22759/87-18 | 18 | 19/30 | 1.25 | 1.65 | 12 | 20 | 6.7 | 9.97 |
| 15 | M22759/87-20 | 20 | 19/32 | 1 | 1.4 | 9 | 32 | 4.55 | 6.77 |
| 16 | M22759/87-22 | 22 | 19/34 | 0.8 | 1.19 | 6 | 52.5 | 3 | 4.46 |

## Table B- 2 Mass of Cables

| Relative position of Components | Voltage(V) | Power(KVA/KW) | No. of Cables | Power per run | Current in Cable | Length of Conductor | Cable Selected | Mass/Length(Kg/m) | Mass of total cables |
|---|---|---|---|---|---|---|---|---|---|
| Cable from GEN1 to PPDU1 | 230 | 137.802 | 3 | 45.934 | 199.713 | 18 | AWG-0 | 0.5134 | 27.724 |
| Cable for earth return | | | 1 | | | 18 | AWG-0 | 0.5134 | 9.241 |
| Cable from PPDU1 to ELMC1 | 27.72 | 8.000 | 1 | 8.000 | 288.600 | 16 | AWG-000 | 0.8065 | 12.904 |
| Cable from PPDU1 to ELMC3 | 267.3 | 141.100 | 1 | 141.100 | 527.871 | 4 | 2*[AWG-00] | 0.6428 | 2.571 |
| | 27.72 | 5.450 | 1 | 5.450 | 196.609 | 2 | AWG-1 | 0.43 | 0.860 |
| Cable from PPDU1 to ELMC5 | 267.3 | 18.280 | 1 | 18.280 | 68.388 | 10 | AWG-8 | 0.08571 | 0.857 |
| | 27.72 | 10.250 | 1 | 10.250 | 369.769 | 10 | AWG-0000 | 1.013 | 10.130 |
| Cable from GEN2 to PPDU2 | 230 | 137.802 | 3 | 45.934 | 199.713 | 18 | AWG-0 | 0.5134 | 27.724 |
| Cable for earth return | | | 1 | | | 18 | AWG-0 | 0.5134 | 9.241 |
| Cable from PPDU2 to ELMC2 | 27.72 | 7.981 | 1 | 7.981 | 287.915 | 16 | AWG-000 | 0.8065 | 12.904 |
| Cable from PPDU2 to ELMC4 | 267.3 | 141.900 | 1 | 141.900 | 530.864 | 4 | 2*[AWG-00] | 0.6428 | 2.571 |
| | 27.72 | 5.150 | 1 | 5.150 | 185.786 | 2 | AWG-1 | 0.43 | 0.860 |
| Cable from PPDU2 to ELMC6 | 267.3 | 16.280 | 1 | 16.280 | 60.905 | 10 | AWG-8 | 0.08571 | 0.857 |
| | 27.72 | 2.100 | 1 | 2.100 | 75.758 | 10 | AWG-6 | 0.1314 | 1.314 |
| APU GEN to PPDU1 | 227.7 | 45.000 | 3 | 15.000 | 65.876 | 20 | AWG-8 | 0.08571 | 5.143 |
| APU GEN to PPDU2 | 227.7 | 45.000 | 3 | 15.000 | 65.876 | 20 | AWG-8 | 0.08571 | 5.143 |
| RAT GEN to PPDU1 | 113.85 | 7.500 | 3 | 2.500 | 21.959 | 15 | AWG-12 | 0.02991 | 1.346 |
| RAT GEN to PPDU2 | 113.85 | 7.500 | 3 | 2.500 | 21.959 | 15 | AWG-12 | 0.02991 | 1.346 |
| EXT power receptacle to PPDU1 | 113.85 | 110.756 | 3 | 36.919 | 324.275 | 18 | AWG-000 | 0.8065 | 43.551 |

| Relative position of Components | Voltage(V) | Power(KVA/KW) | No. of Cables | Power per run | Current in Cable | Length of Conductor | Cable Selected | Mass/Length(Kg/m) | Mass of total cables |
|---|---|---|---|---|---|---|---|---|---|
| EXT power receptacle to PPDU2 | 113.85 | 110.756 | 3 | 36.919 | 324.275 | 18 | AWG-000 | 0.8065 | 43.551 |
| Cable from PPDU1 to left LG actuator | 113.275 | 4.000 | 3 | 1.333 | 11.771 | 10 | AWG-16 | 0.0128 | 0.384 |
| Cable from PPDU1 to right LG actuator(redundancy) | 113.275 | 4.000 | 3 | 1.333 | 11.771 | 12 | AWG-16 | 0.0128 | 0.461 |
| Cable from PPDU2 to right LG actuator | 113.275 | 4.000 | 3 | 1.333 | 11.771 | 10 | AWG-16 | 0.0128 | 0.384 |
| Cable from PPDU2 to left LG actuator(redundancy) | 113.275 | 4.000 | 3 | 1.333 | 11.771 | 12 | AWG-16 | 0.0128 | 0.461 |
| Cable from PPDU1 to left windshield heat element | 113.275 | 3.895 | 3 | 1.298 | 11.462 | 16 | AWG-16 | 0.0128 | 0.614 |
| Cable from PPDU1 to right windshield heat element(redundancy) | 113.275 | 3.895 | 3 | 1.298 | 11.462 | 18 | AWG-16 | 0.0128 | 0.691 |
| Cable from PPDU2 to right windshield heat element | 113.275 | 3.895 | 3 | 1.298 | 11.462 | 16 | AWG-16 | 0.0128 | 0.614 |
| Cable from PPDU2 to right windshield heat element(redundancy) | 113.275 | 3.895 | 3 | 1.298 | 11.462 | 18 | AWG-16 | 0.0128 | 0.691 |
| Cable from PPDU1 to left wing de-icing heat element | 226.55 | 9.034 | 3 | 3.011 | 13.292 | 20 | AWG-14 | 0.01927 | 1.156 |
| Cable from PPDU2 to right wing de-icing heat element | 226.55 | 9.034 | 3 | 3.011 | 13.292 | 20 | AWG-14 | 0.01927 | 1.156 |
| Cable from PPDU1 to left | 226.55 | 15.200 | 3 | 5.067 | 22.364 | 10 | AWG-12 | 0.02991 | 0.897 |

| Relative position of Components | Voltage(V) | Power(KVA/KW) | No. of Cables | Power per run | Current in Cable | Length of Conductor | Cable Selected | Mass/Length(Kg/m) | Mass of total cables |
|---|---|---|---|---|---|---|---|---|---|
| recirculation fan | | | | | | | | | |
| Cable from PPDU2 to right recirculation fan | 226.55 | 15.200 | 3 | 5.067 | 22.364 | 10 | AWG-12 | 0.02991 | 0.897 |
| Cable from PPDU1 to galley | 113.275 | 21.450 | 3 | 7.150 | 63.121 | 10 | AWG-8 | 0.08571 | 2.571 |
| Cable from PPDU2 to galley | 113.275 | 21.450 | 3 | 7.150 | 63.121 | 10 | AWG-8 | 0.08571 | 2.571 |
| Cable from ELMC1 to communication system | 27.58 | 3.500 | 1 | 3.500 | 126.904 | 10 | AWG-4 | 0.2128 | 2.128 |
| Cable from ELMC1 to avionic network | 27.58 | 3.050 | 1 | 3.050 | 110.587 | 8 | AWG-4 | 0.2128 | 1.702 |
| Cable from ELMC2 IPS devices | 27.58 | 6.121 | 1 | 6.121 | 221.936 | 18 | AWG-0 | 0.5134 | 9.241 |
| Cable from ELMC3 to pump valves | 265.95 | 15.000 | 1 | 15.000 | 56.402 | 12 | AWG-8 | 0.08571 | 1.029 |
| Cable from ELMC3 to spoiler actuators | 265.95 | 18.000 | 1 | 18.000 | 67.682 | 16 | AWG-8 | 0.08571 | 1.371 |
| Cable from ELMC3 to left ECS motor | 265.95 | 94.850 | 1 | 94.850 | 356.646 | 8 | AWG-0000 | 1.013 | 8.104 |
| Cable from ELMC3 to height lift actuators | 265.95 | 19.200 | 1 | 19.200 | 72.194 | 8 | AWG-6 | 0.1314 | 1.051 |
| Cable from ELMC3 to breaking(redundancy) | 265.95 | 27.400 | 1 | 27.400 | 103.027 | 12 | AWG-4 | 0.2128 | 2.554 |
| Cable from ELMC3 to nosewheel stearing system(redundancy) | 265.95 | 3.800 | 1 | 3.800 | 14.288 | 11 | AWG-14 | 0.01927 | 0.212 |

| Relative position of Components | Voltage(V) | Power(KVA/KW) | No. of Cables | Power per run | Current in Cable | Length of Conductor | Cable Selected | Mass/Length(Kg/m) | Mass of total cables |
|---|---|---|---|---|---|---|---|---|---|
| Cable from ELMC4 to breaking | 265.95 | 27.400 | 1 | 27.400 | 103.027 | 8 | AWG-4 | 0.2128 | 1.702 |
| Cable from ELMC4 to nose wheel stearing system | 265.95 | 3.800 | 1 | 3.800 | 14.288 | 7 | AWG-14 | 0.01927 | 0.135 |
| Cable from ELMC4 to ram air fan | 265.95 | 20.000 | 1 | 20.000 | 75.202 | 10 | AWG-6 | 0.1314 | 1.314 |
| Cable from ELMC4 to right ECS motor | 265.95 | 94.850 | 1 | 94.850 | 356.646 | 8 | AWG-0000 | 1.013 | 8.104 |
| Cable from ELMC4 to pump valves(redundancy) | 265.95 | 15.000 | 1 | 15.000 | 56.402 | 16 | AWG-8 | 0.08571 | 1.371 |
| Cable from ELMC4 to spoiler actuators(redundancy) | 265.95 | 18.000 | 1 | 18.000 | 67.682 | 20 | AWG-8 | 0.08571 | 1.714 |
| Cable from ELMC5 to elevator actuators | 265.95 | 6.800 | 1 | 6.800 | 25.569 | 12 | AWG-10 | 0.04672 | 0.561 |
| Cable from ELMC5 to cargo door actuators | 265.95 | 2.000 | 1 | 2.000 | 7.520 | 8 | AWG-18 | 0.00997 | 0.080 |
| Cable from ELMC5 to rudder actuators(redundancy) | 265.95 | 4.400 | 1 | 4.400 | 16.544 | 12 | AWG-14 | 0.01927 | 0.231 |
| Cable from ELMC5 to horizontal stabilizer(redundancy) | 265.95 | 1.560 | 1 | 1.560 | 5.866 | 12 | AWG-20 | 0.00677 | 0.081 |
| Cable from ELMC6 to Aileron actuators | 265.95 | 3.520 | 1 | 3.520 | 13.236 | 20 | AWG-14 | 0.01927 | 0.385 |
| Cable from ELMC6 to rudder actuators | 265.95 | 4.400 | 1 | 4.400 | 16.544 | 8 | AWG-14 | 0.01927 | 0.154 |

| Relative position of Components | Voltage(V) | Power(KVA/KW) | No. of Cables | Power per run | Current in Cable | Length of Conductor | Cable Selected | Mass/Length(Kg/m) | Mass of total cables |
|---|---|---|---|---|---|---|---|---|---|
| Cable from ELMC6 to horizontal stabilizer | 265.95 | 1.560 | 1 | 1.560 | 5.866 | 8 | AWG-20 | 0.00677 | 0.054 |
| Cable from ELMC6 to Aileron actuators | 265.95 | 3.520 | 1 | 3.520 | 13.236 | 20 | AWG-14 | 0.01927 | 0.385 |
| Sub total | | | | | | | | | 277.05 |
| additional weight of connectors and cabling from ELMC to miscellaneous equipments = 20% of total | | | | | | | | | 69.26 |
| Net Mass | | | | | | | | | **346.31** |