CRANFIELD INSTITUTE OF TECHNOLOGY

DEPARTMENT OF FLUID ENGINEERING AND INSTRUMENTATION

Ph.D. Thesis (Total Technology)

Academic Year 1983 - 84

E.G. Arato

'Separation with the aid of surface and interfacial tensions'

Supervisor: Dr. K. Enever

April 1984

PAGE
NUMBERS
CUT OFF
IN
ORIGINAL

SUMMARY

The investigations described in this thesis were aimed at developing or laying the foundation of novel techniques of liquid/solid and liquid/liquid separation by utilising the capillary effect.

In Part I the studies related to the extraction of water from an agglomerate of particulate solids and water (i.e. dewatering) by means of ceramic elements are described. These studies clearly showed that although water can be extracted from the agglomerate by ceramic elements and evaporated to atmosphere, the rate of extraction is generally too low for commercial application of the technique.

Part II of this thesis deals with the separation of two immiscible liquids (i.e. water and oil) using a ceramic filter tube either as a 'threshold pressure' separator or a coalescer. It was found that diesel fuel, for instance, could be separated to practically 100% efficiency from a secondary dispersion of oil/water, provided the applied pressure across the tube is maintained below a critical value. This technique could form the basis of a very efficient commercial oil/water separator.

ACKNOWLEDGEMENTS

The author gratefully acknowledges the advice and encouragement by his supervisor, Dr. K. Enever, and is indebted to BHRA Fluid Engineering and SERC who jointly supported this undertaking.

The author also wishes to express his thanks to Mrs. Jayne Luya-Ames for typing the manuscript.

TABLE OF CONTENTS

Page

SUMMARY

ACKNOWLEDGEMENTS

LIST OF FIGURES

LIST OF SYMBOLS

PART I

CHAPTER 1 INTRODUCTION 1
- 1.1 Background to the Project 1
- 1.2 Scope and Long-term Objectives 2
- 1.3 Overall Review of Separation Technology 3

CHAPTER 2 THE FUNDAMENTAL PRINCIPLES OF LIQUID/SOLID SEPARATION 5
- 2.1 Settling of Solids in Liquid 5
  - 2.1.1 Single particle 5
  - 2.1.2 Multi-particle system 6
- 2.2 Coagulation and Flocculation 7
  - 2.2.1 General description of coagulation 7
  - 2.2.2 Electrostatic repulsion 8
  - 2.2.3 Repulsive potential due to the intersection of two flat double layers 14
  - 2.2.4 Van der Waals attraction between particles 16
  - 2.2.5 The total potential between two flat particles 17

CHAPTER 3 REVIEW OF RELEVANT DEWATERING TECHNIQUES 18
- 3.1 Filtration 18
- 3.2 Electro-osmosis 19

CHAPTER 4 CAPILLARY EVAPORATIVE DEVICE 27
- 4.1 Preliminary Studies 27
  - 4.1.1 Preliminary feasibility studies 28
- 4.2 Investigations Related to the Full Size Capillary/Evaporative Device 29
  - 4.2.1 Small scale experiments 29
- 4.3 Initial Design of the Full Size Device 31
  - 4.3.1 Pore size and extraction rate 32
  - 4.3.2 Estimated rate of evaporation from the surface of a cylinder 35
- 4.4 Mathematical Model 37
- 4.5 The Finite Element Technique 39
- 4.6 Considered Variations on the Original Design 40
- 4.7 Alternative Design of the Dewatering Device 41
  - 4.7.1 General Description 41
  - 4.7.2 Experimental arrangement 42
  - 4.7.3 Observations 43

CHAPTER 5 CONCLUDING REMARKS 44

TABLE OF CONTENTS continued

Page

PART II

CHAPTER 6 THE USE OF CERAMIC TUBES FOR OIL/WATER SEPARATION 45
6.1 Introduction 45
6.2 Existing Coalescer/Filters 46

CHAPTER 7 PRINCIPLES UTILISED FOR OIL/WATER SEPARATION 48
7.1 Two-phase Flow in Porous Medium 48
7.1.1 General comments on a porous ceramic coalescer 51
7.1.2 'Threshold' pressure oil/water separator 52

CHAPTER 8 EXPERIMENTAL ARRANGEMENT 53
8.1 Coalescer/Separator 53
8.1.1 Test conditions 53
8.1.2 Prediction of flow rates 53

CHAPTER 9 EXPERIMENTAL OBSERVATIONS 57
9.1 Tests 1 - Lubrication Oil 57
9.2 Tests 2 - Diesel Oil 58
9.2.1 Feasibility Studies 58
9.2.2 Additional Studies 60
9.3 Miscellaneous Tests 62

CHAPTER 10 THEORETICAL CONSIDERATIONS 63

CHAPTER 11 DESIGN SUGGESTIONS 65

CHAPTER 12 SUMMARY AND DISCUSSION OF RESULTS 68

CHAPTER 13 'THRESHOLD' PRESSURE OIL/WATER SEPARATOR 69
13.1 Preliminary Considerations 69
13.2 Test Conditions 69
13.3 Experimental Observations 69
13.4 Discussion of Results 70

CHAPTER 14 CONCLUSIONS 71

CHAPTER 15 OVERALL ASSESSMENT OF THE PROJECT 72

CHAPTER 16 REFERENCES 74

APPENDIX I MARKET SURVEY I

APPENDIX II SURFACE AND INTERFACIAL TENSIONS XIII

APPENDIX III PROPOSALS FOR RESEARCH IN LIQUID/SOLID SEPARATION XV

APPENDIX IV PATENT SPECIFICATION XX

APPENDIV V CONSORTIUM PROPOSAL XXXIII

APPENDIX VI REDUCING HEAD OR PRESSURE LOSSES ACROSS A HYDROCYCLONE XLIV

LIST OF FIGURES

Fig. 1 Colloidal model.

Fig. 2 Dewatering china clay.

Fig. 3 Full size capillary device.

Fig. 4 Finite element scheme/capillary device.

Fig. 5 Plan view of alternative device.

Fig. 5a Dewatering by the alternative device.

Fig. 6 Evaporation rate by the alternative device.

Fig. 7 A typical capillary pressure/saturation curve.

Fig. 8 Relative permeability/saturation curves.

Fig. 9 Diagrammatic layout of test rig.

Fig. 10 Experimental arrangement.

Fig. 11 Flow rate of emulsion of 60% diesel and 40% water (V/V).

Fig. 12 Variation of contamination rates with applied pressure.

Fig. 13 Treated diesel fuel.

Fig. 14 Contact angle.

LIST OF SYMBOLS

a	Radius of particle.
A	Cross-sectional area.
b	Reciprocal of Debye length.
C	Concentration or correction factor.
d	Particle diameter.
D	Diffusivity.
e	Elementary charge.
E	Electric potential gradient.
g	Gravitational acceleration.
h	Head or elevation.
I	Electric current.
K	Boltzmann constant, permeability or shape correction factor.
ℓ	Length.
L	Length.
n	Number of ions.
Δp	Pressure drop.
p	Pressure.
P	Pressure or porosity.
q	Electrostatic charge or flow rate.
Q	Flow rate.
r	Radius or capillary radius
R	Radius of rotation.
$R_e = \frac{V\rho D}{\mu}$	Reynolds number.
S	Streaming potential
t	Time.
T	Absolute temperature or tortuosity.
u	Mean velocity.
V	Velocity, valency or voltage.
w	Mass transfer rate.
x	Coordinate.
y	Coordinate.
z	See page 11 .

LIST OF SYMBOLS continued

α	Contact angle.
β	Empirical constant.
δ	Thickness of flat plate.
ε	Dielectric constant.
ξ	Zeta potential.
μ	Dynamic viscosity.
ρ	Fluid density or charge density.
σ	Surface, or interfacial tension or surface charge.
τ	Shear stress.
ϕ	Velocity potential or mass transfer flux.
ψ	Electric potential.
ω	Angular velocity.
λ	See page 11.

PART I

CHAPTER 1. INTRODUCTION

1.1 Background to the Project

In a continuous search for new research activities, a decision was made by BHRA Fluid Engineering to become involved in areas of liquid/solid separation, where a specific need exists either to improve existing techniques or to develop new techniques.

In order to identify suitable areas, discussions were held with clients and representatives of members of the Association involved in related activities. These discussions revealed the need for developing an effective but inexpensive method of dewatering settling lagoons which are filled up with sediment.

Settling lagoons can be used for discharging dredged material, treated sewage, effluent from processes or mining industries and normally cover large areas. Due to the very low through velocity of the flow and the consequent long residence time, most of the suspended particles will settle out, leaving the overflow discharging from the lagoon relatively free of particulate matter. After several years of continuous use the lagoon becomes full of sediment, which needs to be extracted prior to re-use of the lagoon. According to the information received by BHRA during the preliminary enquiries, filled up lagoons tend to develop an impermeable surface crust, which effectively prevents further dewatering by evaporation, consequently a high water content is retained in the settled material, rendering it unsuitable for mechanical extraction. For dewatering of this material, BHRA suggested the possibility of developing a technique utilising the natural effects of capillary rise and evaporation. This technique would be inexpensive as no energy consumption or maintenance would be required.

NRDC was approached to support the development of a capillary/evaporative technique suitable for dewatering settling lagoons. The financial support for the preliminary feasibility studies was granted in 1977. The main objective of these studies was to identify a commercially available material which would extract water from a suspension of fine particles without appreciable blockage of the pores. In addition the material selected should not deteriorate under the influence of weather conditions and likely biological and physical attacks. Of the several materials examined only ceramic filter tubes appeared to have satisfied these requirements.

The author of this report carried out the technical work associated with this project and following the completion of these studies enrolled with the Fluid Engineering Unit for a course of studies leading to a PhD in Total Technology.

As a result of the reasonably positive outcome of the preliminary studies, further financial support was received from NRDC towards the commercial development of the capillary/evaporative technique of dewatering. It was envisaged that the extension of this project would supply the technical material and the finance, for at least the first year of the Total Technology course and additional work in a related field would be forthcoming as a result of this project.

1.2 Scope and Long-term Objectives

Apart from the short-term objectives of developing a commercial device for dewatering filled-up lagoons and deriving income from feasibility studies and licence fees, the long-term objective was to participate in research and development activities in some major areas of liquid/solid separation technology.

The need for this type of research was clearly demonstrated in a major article by J.H. Krieger in the Chemical and Engineering News titled 'Separation Technology Faces Crisis' (Ref. 1). The writer of this article suggested that the main reason for the crisis situation was the shortage of knowledgeable personnel, due to the absence of educational courses dealing with the subject in depth.

The article identifies a range of processes, where the need to improve existing techniques is particularly acute, some of which are sludge filtration, dewatering of cakes, flocculation and thickening. Furthermore, investigations on the use of hydrocyclones and the basic mechanisms governing the operation of froth flotation cells would also be desirable.

In view of the technological need for research and development it was anticipated that, including a relatively minor income from the capillary evaporative device, an overall income of 50,000 pounds sterling could be achieved in the long-term from work associated with liquid/solid separation.

1.3 Overall Review of Separation Technology

Liquid/solid separation can be defined as an activity where a liquid (e.g. water) is being extracted from a mixture containing liquid and particulate solids. This activity covers a wide variety of techniques and some or other of the techniques are used in almost every major industry. In some industrial processes, liquid/solid separation forms a major part of the process. In these processes the particulate end product prepared with the aid of large quantities of process water, needs to be relatively dry prior to marketing or further use. In addition the process water is required to be relatively free of particulate matter before being recycled, as failure to achieve this would result in an inferior product quality and in a likely pollution of close-by streams or rivers, due to the subsequent discharge of contaminated process water.

In these process plants, the unit performing liquid/solid separation consists of a variety of equipment, each designed for a certain function in a chain of operations starting from the input of a dilute suspension and ending with the recovery of a relatively dry particulate product.

In the liquid/solid separation processes indicated above, the mixture to be treated is always conveyed to the equipment. On the other hand, extraction of water may also be required 'in-situ', as in the case of land reclamation and ground consolidation. The techniques employed in these applications are referred to as 'in-situ' dewatering techniques.

The separation of two immiscible liquids (e.g. oil and water) is basically similar to liquid/solid separation, as gravity or centrifugal acceleration is generally used as a basic mechanism for the separation of the two phases. However the main difference between the two areas of the separation technology lies in the methods employed for enhancing the gravity processes.

In the case of liquid/solid separation, a flocculating reagent is added to accelerate coagulation of particles, while in oil/water separation, coalescence of the droplets of a dispersion is promoted either by an electrostatic field or by a mechanical coalescer.

The studies described in this report cover aspects of liquid/solid and liquid/liquid separation technology. Initially, the technical feasibility, then the marketing potential of a novel technique of 'in-situ' dewatering was assessed. These investigations were followed by feasibility studies of two suggested methods of oil/water separation, which were derived from the nature of two-phase flow in a porous medium. All three techniques utilise the interfacial tension effect to produce separation of the phases.

CHAPTER 2. THE FUNDAMENTAL PRINCIPLES OF LIQUID/SOLID SEPARATION

In practice, the first stage of liquid/solid separation usually involves gravity or centrifugal separation of suspended particles from the liquid. This stage is then followed by some dewatering process, where the water is being extracted from a concentrated suspension or from the pores of granular material. The principles employed in these processes are reviewed below.

2.1 Settling of Solids in Liquid

2.1.1 Single particle

A single, spherical particle in still liquid is affected by buoyancy, drag and inertia forces and its settling velocity in the Stokes region, (where Re < 1) can be evaluated from the following equation.

$$\frac{4}{3}\pi r^3\, g(\rho_p - \rho_w) - 6\,\pi\mu r V = \frac{4}{3}\pi r^3\,(\rho_p - \rho_w)\frac{dV}{dt} \qquad (2.1)$$

A constant terminal velocity is reached, when

$$\frac{dV}{dt} = 0$$

then

$$V = \frac{4r^2\, g(\rho_p - \rho_w)}{18\,\mu} = \frac{d^2\, g(\rho_p - \rho_w)}{18\,\mu} \qquad (2.2)$$

where

V = terminal velocity

d = $2r$ = particle diameter

ρ_p = density of particle

ρ_w = density of liquid (water)

μ = dynamic viscosity

Re = Reynolds number

If a centrifugal acceleration is applied to a particle (e.g. as in centrifuges or hydrocyclones), 'g' is replaced by a much larger $R\omega^2$, thus the terminal settling velocity is increased by a factor of $R\omega^2/g$

where

R = radius of rotation

ω = angular velocity

2.1.2 Multi-particle system

The settling velocity discussed above also applies to very dilute suspensions. However in the case of most industrial effluents or suspensions the solids concentration is high enough for 'hindered settling' to prevail. Here, the settling velocity of the individual particles will be reduced as a result of the upward velocity of the displaced fluid. An empirical formula for the settling of solids in suspensions proposed by Richardson and Zaki, quoted by Svarovsky in Ref. 2, is:-

$$\frac{V_s}{V} = (1 - C)^{\beta} \qquad (2.3)$$

where

V_s = actual settling velocity

V = settling velocity of a single particle

C = concentration by volume

β = empirical constant

2.2 Coagulation and Flocculation

The gravity settling (or hindered settling) of individual particles in liquid is generally too slow for commercial application in continuous processes. The settling rate, however, can be dramatically increased by promoting coagulation of individual particles into clusters of particles, whose equivalent diameter (d_e) is much larger than the individual diameters (d). As a result the settling velocity will increase by a factor of $(d_e/d)^2$. Coagulation is promoted by neutralising the electrostatic repulsion forces acting between the particles. The nature of the repulsive force and the mechanism involved in providing coagulation is described in the following section.

2.2.1 General description of coagulation

Most suspended particles present in suspensions carry negative charges on their surface. These charges will attract positively charged ions from the bulk of the liquid, resulting in the formation of an ionic cloud or ionic atmosphere around each particle. The ionic atmosphere consists of two distinct parts and is generally referred to as a double layer. The first part of the double layer is about one ion thick and is rigidly fixed to the particle (Stern layer). The second part extends to some distance into the liquid and is characterised by a gradual fall in concentration of positive ions until electrical neutrality is reached. This is called the diffuse part of the double layer and the potential drop across his layer is called the zeta (ζ) potential which is a measurable quantity. (For illustration see Fig. 1).

Although the overall electric charge of a particle/double layer system is zero, as soon as the double layers of two particles overlap, a repulsive force is exerted on the particles, which tends to keep them apart. The magnitude of this force depends on the potential distribution around the particles.

In addition to the electrostatic repulsion between particles, an attraction force, named after its discoverer Van der Waals, also exists between particles. If we consider a suspension or sol containing electrically charged particles, collision and subsequent adherence between particles will depend - apart from statistical probability - on the relative magnitude of the repulsive and attractive forces. Neutralisation of the electrostatic repulsive forces would therefore result in the formulation of agglomerates of particles held together by the Van der Waals attraction forces.

2.2.2 Electrostatic repulsion

The distribution of electric potential around a charged particle can be described by Poisson's equation:-

$$\nabla^2\psi = \frac{\rho}{\varepsilon\varepsilon_o} \tag{2.4}$$

where

∇^2 = Laplace operator

ρ = charge density

ε = dielectric constant of liquid

ε_o = permitivity of space

ψ = electric potential

This charge density can be expressed with the aid of Boltzmann's Theorem in the following way:-

$$n_- = n \exp (V_{(-)}\, e\psi/KT)$$

and

$$n_+ = n \exp (-V_{(+)}\, e\psi/KT)$$

if

$$V_{(-)} = V_{(+)}$$

then

$$\rho = Ve(n_+ - n_-) = -2n\ Ve\ \sinh\ (Ve\psi/KT) \qquad (2.5)$$

where

n_- = number of negative ions per unit volume

n_+ = number of positive ions per unit volume

$V_{(-)}$ = valency, negative

$V_{(+)}$ = valency, positive

e = elementary charge

K = Boltzmann constant

T = absolute temperature

After substitution of (2.5) into (2.4), Poisson's equation becomes:-

$$\nabla^2\psi = \frac{2nVe\ \sinh\ (Ve\psi/KT)}{\varepsilon\ \varepsilon_o} \qquad (2.6)$$

Equation (2.6) can not be solved analytically without simplifying assumptions. However, there are two basic theories dealing with the evaluation of potential distribution around a particle which are:- (see Ref. 3)

(i) Debye-Hückel Theory: Spherical Double Layer

This theory considers a spherically symetric distribution of an ionic atmosphere formed around a simple central ion. A solution of equation (2.6) is obtained by assuming a very dilute solution where the thermal energy is much greater than the electrical energy.

$Ve\psi/KT \ll 1$

Poisson's equation for a spherically symmetric distribution then becomes:-

$$\frac{1}{r^2}\frac{d}{dr}\left(r^2\frac{d\psi}{dr}\right) = b^2\psi \qquad (2.7)$$

where

$$b^2 = \frac{2\ ne^2\ V^2}{\varepsilon\ \varepsilon_o\ KT}$$

and b^{-1} = Debye length and is an approximate measure of the thickness of the ionic atmosphere.

The general solution of (2.7) is:-

$$\psi = \psi_a \frac{a}{r} e^{-b\ (r - a)}$$

where

ψ_a = potential at 'a'

r = radial distance

a = radius of particle

Total charge (q) on a particle is given by:-

$$\left(\frac{d\psi}{dr}\right)_{r=a} = -\frac{\sigma_e}{\varepsilon\ \varepsilon_o} = -\frac{q}{4\pi a^2\ \varepsilon_o \varepsilon} = -\psi_a\ \frac{1 + ba}{a}$$

where

σ_e = surface charge per unit surface area

and

$q = 4\pi\ a\ \varepsilon\ \varepsilon_o\ (1+\ ba)\ \psi_a$

(ii) Gouy-Chapman Theory, Flat Double Layer

The potential distribution in a flat, one-dimensional double layer can be evaluated from equation (2.6), using the following substitutions:- (see Ref. 3).

$y = Ve\psi/KT$

$Z = Ve\psi_o/KT$

$$b^2 = \frac{2n\ e^2\ V^2}{\varepsilon\ \varepsilon_o\ KT}$$

and

$\lambda = bx$

where x is the linear co-ordinate.

Hence, equation (2.6) is simplified to:-

$$\frac{d^2y}{d\lambda^2} = \sinh y$$

which after integration and application of boundary conditions at

$$\frac{dy}{d\lambda} = 0$$

and y = 0 gives:-

$$\frac{dy}{d\lambda} = - \sqrt{2 \cosh y - 2} = - 2 \sinh \left(\frac{y}{2}\right) \tag{2.8}$$

Applying further boundary conditions of $\lambda = 0$, $y = Z$ the solution of (2.8) is obtained as:-

$$e^{y/2} = \frac{e^{Z/2} + 1 + (e^{Z/2} - 1)\, e^{-\lambda}}{e^{Z/2} + 1 - (e^{Z/2} - 1)\, e^{-\lambda}} \tag{2.9}$$

This expression is simplified for special cases, i.e.

(a) when $Z \ll 1$, $y = Ze^{-\lambda}$

or

$$\psi = \psi_o e^{-bx} \tag{2.10}$$

at $bx = 1$, $\psi = \psi_o / e$

or, the potential drops to $\frac{1}{e}$ of its value at $x = b^{-1}$ which is the Debye length and characterises the thickness of the diffuse layer.

(b) For Z >> 1 and λ small, equation (2.9) is simplified to:-

$$y = Z - e^{Z/2} \lambda \tag{2.11}$$

(c) In the case of λ >> 1, the appromixation of equation (2.9) is:-

$$y = 4 \frac{e^{Z/2} - 1}{e^{Z/2} + 1} e^{-\lambda} \tag{2.12}$$

The surface charge per unit surface area (σ_e) of the double layer is expressed as:-

$$\sigma_e = -\varepsilon \varepsilon_o \left(\frac{d\psi}{dx}\right)_{x = 0} \tag{2.13}$$

By using equation (2.8), the potential gradient will be:-

$$\frac{d\psi}{dx} = - \sqrt{\frac{2n\ KT}{\varepsilon \varepsilon_o}} \sqrt{2 \cosh y - 2}$$

Therefore

$$\left(\frac{d\psi}{dx}\right)_o = -\sqrt{\frac{8n\ KT}{\varepsilon \varepsilon_o}} \sinh \left(\frac{Z}{2}\right) \tag{2.14}$$

The surface charge σ_e is obtained by substituting (2.14) into (2.13):-

$$\sigma_e = -\sqrt{8n\ KT\ \varepsilon \varepsilon_o} \sinh \left(\frac{Z}{2}\right) \tag{2.15}$$

For small double layer potentials, σ_e is modified to:-

$$\sigma_e = \varepsilon \, \varepsilon_o \, b \, \psi_o \tag{2.16}$$

Hence, the double layer behaves as a condenser with plates $\frac{1}{b}$ apart.

The above relationship also applies to spherical particles whose radii are much greater than the thickness of the double layer.

2.2.3 Repulsive potential due to the intersection of two flat double layers

As two particles surrounded by their double layers approach each other a repulsive force is set up which tends to keep the particles apart. The derivation of the magnitude of this force for general cases is extremely complex. However for small interactions (i.e. $\lambda \gg 1$) which is applicable to most practical situations, the magnitude of this force can be expressed by the following considerations.

For small interactions it can be assumed that the potential midway between the two plates (u) is built up additively from the two double layers, hence:-

$$u = 2y_d$$

In equation (2.12) it was shown that for $\lambda \gg 1$,

$$y_x = 4\gamma e^{-\lambda}$$

where

$$\gamma = \frac{e^{Z/2} - 1}{e^{Z/2} + 1}$$

Consequently

$$u = 8\gamma e^{-\lambda} \tag{2.17}$$

The force acting on 1 cm^2 of the phase boundary of any plate is:-

$$p = p_d - p_\infty$$

where

d = distance between plates

p_d = pressure at d

p_∞ = pressure at infinity

The equilibrium condition between hydrostatic pressure and space charge requires that:-

$$p = p_d - p_\infty = - \int_o^{\psi_d} \rho d\psi \tag{2.18}$$

After substituting for ρ and integrating (2.18), we obtain:-

$$p = 2n\ KT\ (\cosh u - 1) \tag{2.19}$$

For small interactions ($u < 1$) equation (2.19) simplifies to:-

$$p = n\ KT\ u^2 \tag{2.20}$$

Hence, substitution of (2.17) into (2.20) gives:-

$$p = 64\ \gamma^2\ e^{-2\lambda}\ n\ KT$$

The potential energy or repulsive potential (V_R) between the plates (or particles) in terms of p is:-

$$V_R = -\int_{\infty}^{d} p\ dx = \frac{64\ n\ KT}{b}\ \gamma^2\ e^{-2\lambda} \qquad (2.21)$$

2.2.4 Van der Waals attraction between particles

Van der Waals' attractive forces are universal and act between atoms, molecules, ions etc.

The magnitude of the attractive potential (or potential energy) between flat plates of thickness δ at a distance of 2 d apart is:-

$$V_A = -\frac{A}{48\pi}\left(\frac{1}{d^2} + \frac{1}{(d+\delta)^2} - \frac{2}{(d+\delta/2)^2}\right) \qquad (2.22)$$

where A is related to the number of atoms in 1 cm^3 of the particle material (see Ref. 3).

Equation (2.22) can be simplified for cases where either $d >> \delta$ or $\delta >> d$, to:-

$$V_A = -\frac{\delta^2\ A}{32\ \pi\ d^4} \qquad (2.23)$$

and $V_A = -\dfrac{A}{48\ \pi\ d^2}$ respectively (2.24)

2.2.5 The total potential between two flat particles

The summation of the repulsive and attractive potential $V_R + V_A$ represents the total potential acting between the particles or plates.

Equation (2.22) shows that the attractive potential approaches $-\infty$ as the distance between the particles (or parallel plates) is reduced to zero, at the same time the repulsive potential approaches a finite positive value (equation 2.21). Consequently, at very small distances, the attractive potential will predominate over the repulsive potential. In addition, due to exponential decrease of the repulsive potential with distance compared with the quadratic decrease of the attractive potential, V_A will also be greater than V_R at very large distances. At intermediate distances between the charged surfaces, two types of conditions can occur:-

(a) For positive values of $V_R + V_A$ an 'energy barrier' exists between the particles, which prevents them approaching each other. This condition represents a stable suspension.

(b) For negative or zero values of $V_R + V_A$ the particles approaching each other due to their Brownian motion will attach and form aggregates. This condition prevails in flocculated suspensions.

Flocculation of a stable suspension can be achieved by an addition of an electrolyte which produces condition (b), i.e.

$$V_R = - V_A \qquad (2.25)$$

The concentration of electrolyte (n) to produce flocculation can be expressed by substituting equations (2.21) and (2.24) together with the condition bd = 1 into equation (2.25).

CHAPTER 3. REVIEW OF RELEVANT DEWATERING TECHNIQUES

In addition to flocculation used in water clarification some existing dewatering techniques which in application and/or method of operation bear some resemblance to the proposed capillary/evaporative technique are also governed or influenced by the interaction of electrostatic and Van der Waals forces. A brief description of these processes are as follows:-

3.1 Filtration

Filtration is a major liquid/solid separation process and according to the mechanism involved, it can be divided into two distinct types, i.e.:-

(i) Deep bed filtration. With deep bed filtration, the particles of the suspension are retained within the pores of the filter bed. Since the particles are normally much smaller than the cross-sectional area of the pores, the retention is not caused by mechanical wedging in the pores, but by the Van der Waals' attractive forces acting between the particles and the filter material. A deep bed filter works effectively until, due to the blockage, the increased viscous drag prevents further deposition of particles. At this stage the filter bed needs to be regenerated, which is normally achieved by back-flushing with clean water at a pressure in excess of the filtration pressure.

(ii) Cake filtration. In this process, the openings of the filter material are generally smaller than the size of the suspended particles to be separated. Consequently, the particles do not enter the pores, but form layers on the surface, called filter cake, which increases in thickness as the operation progresses.

As a first approximation the flow characteristics of this process can be described by Darcy's formula, i.e.

$$Q = \frac{K}{\mu} A \frac{\Delta p}{L}$$

where

K = permeability of cake

μ = viscosity of liquid

A = cross-sectional area

Δp = pressure drop

L = thickness of cake

The filtration of a certain suspension is basically dependent on the permeability of the filter cake. This in turn depends on the size distribution of suspended solids and also on the double layer potential. Flocculated slurries where the electrostatic repulsion is neutralised, generally form higher permeability cakes than the pure slurries, unflocculated.

3.2 Electro-osmosis

Dewatering by means of electro-osmosis has been used successfully on a variety of projects. However, due to the relatively large power consumption of the operation, electro-osmosis is only considered where, due to the very low permeability of the soil, the more conventional methods of dewatering (i.e. gravity or vacuum well points) are ineffective. In practical applications a diesel driven generator is supplying the power to an array of electrodes, with the negative electrodes normally situated in wells. The water collected is discharged by pumps (see Ref. 4). The underlying hypothesis of electro-osmotic flow is as described below.

(i) Flow through a rigid capillary

The capillary system of a low permeability soil, typically a clay material, has a nett negative charge. This charge attracts exchangeable positive ions from the pore water. As discussed in Chaper 2, these ions will form a fixed layer on the solid surface. The rest of the ions in the water will form the diffuse part of the double layer with the positive ions predominant near the solid boundary. Towards the centre of the pore the concentration of the positive ions will reduce while the concentration of negative ions will increase until the charge distribution becomes uniform.

A potential difference applied at the ends of the capillary will produce an electrical force which will act on the concentrated positive ions near the solid boundary and propel it towards the cathode.

The diffuse part of the double layer can be treated as a parallel plate condenser:-

$$\xi = \frac{qd}{K_c \varepsilon_o A}$$

where

$\frac{q}{A} = e$ = charge per unit surface area

$\varepsilon_o = 8.85 \times 10^{-12} \frac{\text{Coul}^2}{\text{N} - \text{m}^2}$

K_c = dielectric coefficient of liquid

ξ = zeta potential

Hence, in simplified form:-

$$\xi = \frac{ed}{K_c \varepsilon_o} \tag{3.1}$$

The electric force acting on the layer of liquid adjacent to the solid boundary is:-

$$F = Ee \quad (\frac{N}{m^2})$$

where,

E = electric potential gradient

The frictional force (or shear stress) opposing this force is:-

$$\tau = \mu \frac{u}{d}$$

where

μ = dynamic viscosity of liquid

u = mean velocity

For. steady state conditions:-

$$Ee = \mu \frac{u}{d} \qquad (3.2)$$

$$\text{Hence } ed = \frac{\mu u}{E} \qquad (3.3)$$

After substitution of (3.3) into (3.1) we have:-

$$\xi = \frac{\mu u}{K_c \varepsilon_o E} \qquad (3.4)$$

Since the flow rate through a single capillary tube is:-

$$Q = r^2 \pi \mu$$

equation (3.4) can be expressed as

$$\xi = \frac{\mu Q}{r^2 \pi K_c \varepsilon_o E} \tag{3.5}$$

Poiseuille's equation for flow in a capillary tube is:-

$$Q = \frac{\pi r^4 P}{8 \mu \ell} \tag{3.6}$$

where

P = pressure drop

ℓ = length

Substituting into (3.5) we have:-

$$P = \frac{8 \xi K_c \varepsilon_o E \ell}{r^2} \tag{3.7}$$

which is the magnitude of static pressure produced by the electric field under no flow rate.

Conversely if a static pressure difference is applied between the two ends of a capillary tube, a streaming potential will be produced, the magnitude of which can be evaluated as follows:-

i.e. the velocity at a distance (r - x) from the centre of the capillary is:-

$$u_x = \frac{p\,(r^2 - x^2)}{4\,\mu\,\ell} \approx \frac{r\;x\;P}{2\,\mu\,\ell} \qquad (3.8)$$

The flow of charges constitute a current, i.e. $q = e\,2\pi\,r\,\ell$ = total charge within the capillary tube

velocity, $u_x = \frac{\ell}{t}$

$$\text{and } I = \frac{q}{t} = 2\,\pi\,r\,e\,u_x \qquad (3.9)$$

Substituting (3.8) into (3.9) we get:-

$$I = \frac{\pi\,r^2\,e\,x\,P}{\mu\,\ell} \qquad (3.10)$$

from Ohm's law:-

$$\frac{S}{\ell} = \frac{I}{\pi\,r^2\,K} \qquad (3.11)$$

where:-

S = streaming potential

K = specific conductance of liquid

Substitution of (3.10) into (3.11) yields:-

$$S = \frac{e\ x\ P}{\mu\ K}$$

since $e x = \xi\ K_c\ \varepsilon_o$

$$S = \frac{\xi\ K_c\ \varepsilon_o\ P}{\mu\ K} \tag{3.12}$$

which is an expression for the streaming potential.

(ii) Flow through porous medium

The flow rate through a single capillary (see equation 3.5) is:-

$$Q = \frac{r^2\ \pi\ \xi\ K_c\ \varepsilon_o\ E}{\mu} \tag{3.13}$$

However, if we consider a porous material instead of a single capillary, the flow rate through a section of this material can be expressed as:-

$$Q = \frac{\xi\ K_c\ \varepsilon_o\ P_r}{\mu} \times E \times A \tag{3.14}$$

where

P_r = a quantity related to the porosity and the cross section of the pore space

A = cross sectional areas of the material

The form of equation (3.14) is similar to Darcy's equation; for instance assume that:-

$$\frac{\xi\ K_c\ \varepsilon_o\ P_r}{\mu} = K_e$$

which is the electro-osmotic permeability and

$E = \frac{dV}{\ell}$ = electrical potential gradient

the electro-osmotic flow rate is then:-

$$Q_e = K_e \frac{dV}{\ell} A \qquad (3.15)$$

Or, in general form:-

$$U_{ex} = - K_{ex} \frac{\partial V}{\partial x}$$

and $U_{ey} = - K_{ey} \frac{\partial V}{\partial y}$, etc

For isotropic soil $K_{ex} = K_{ey}$

Hence $U_{ex} = - K_e \frac{\partial V}{\partial x} = - \frac{\partial \phi}{\partial x}$

and $U_{ey} = - K_e \frac{\partial V}{\partial y} = - \frac{\partial \phi}{\partial y}$

Similarly to flows induced by pressure difference, the velocity potential (ϕ) of electro-osmotic flow can be evaluated by the Laplace equation if:-

$$\frac{\partial^2 \phi}{\partial x^2} + \frac{\partial^2 \phi}{\partial y^2} = 0$$

The magnitude of the electro-osmotic permeability depends on the permeability and the total pore area available for the flow, but it is practically independent of the size and shape of the pores. The hydrostatic permeability on the other hand depends mainly on the size and shape of the pores of the particular porous material.

(iii) Electrophoresis

If a suspension or dispersion containing charged particles is subjected to an electrical potential difference the particles will migrate towards the appropriate electrode, while the liquid remains still. This phenomenon is the reverse of electro-osmosis and is referred to as electrophoresis.

CHAPTER 4. CAPILLARY EVAPORATIVE DEVICE

4.1 Preliminary Studies

It is known that water wetting porous materials will draw water from the surroundings by capillary action until they become fully saturated. This process can take place against gravity (i.e. when water is being passed above the static water surface) provided:-

$$r < \frac{2\sigma}{h_o \rho g} \cos\alpha$$

where

r = capillary radius

σ = surface tension of water

ρ = density of water

h_o = elevation above water surface

α = contact angle

Evaporation of the raised water will take place. The water raised by capillary action will evaporate from the surface and the body of the porous material under the effect of wind and concentration gradient between the wet surface and the surrounding atmosphere. Thus the porous material becomes undersaturated. The capillary effect tends to restore the original degree of saturation of the medium. This way a continuous process of water extraction is produced, although at a very low rate.

The continuous evaporation and replenishment by the capillary action provides a method of water extraction at a slow rate but without the input of external energy.

4.1.1 Preliminary feasibility studies

The original intention regarding the function of a capillary/evaporative device was to extract water from a concentrated suspension (e.g. as in process lagoons) and thus provide the required degree of consolidation of the solids. With this view in mind the preliminary feasibility studies were undertaken with the following main objectives:-

(1) To identify a suitable porous material which may be used for the construction of a capillary/evaporative device.

(2) To assess whether or not the pores of this material would be blocked by solid particles, thereby preventing the extraction of water.

For objective (1), it was considered that the porous material should satisfy the following requirements:-

(i) Small contact angle with water (i.e. water wetting).

(ii) Made to controlled pore size and porosity in order to enable the performance of the device to be optimised.

(iii) Should be relatively inexpensive.

(iv) Should be physically strong and not deteriorate under the influence of weather conditions and likely biological and chemical attacks.

Commercially available porous plastics are non-wetting to water, therefore they were discounted from considerations.

The 'wood pulp' tested demonstrated extremely good wetting property, however it tended to disintegrate. On the other hand 'cardboard' showed a slow rate of capillary rise, while 'compressed wood chippings' showed virtually no capillary property. Only porous ceramics have satisfied broadly all requirements specified above.

The preliminary tests were conducted using ceramic filter elements. A brief summary of the experiments and results obtained are given below.

The test apparatus consisted of a variable speed fan, a beaker containing water or suspension and ceramic element(s) to extract the water. The top of the beaker was sealed by a plastic sheet to prevent evaporation from the surface of the liquid. The loss of weight due to evaporation through the porous device was measured on accurate scales. A typical test conducted at 62% relative humidity and 2 m/s air velocity showed an extraction rate by a ceramic tube of 15 μm mean pore size of about 430 gm/hr/m^2 of water from the beaker containing water only (i.e. no solids). The extraction rate seemed to increase in proportion to the air velocity, and did not diminish significantly by clamping two ceramic elements together.

Dewatering tests on a china clay suspension control using 45% clay by weight also showed encouraging results. It was found that the suspension was eventually completely dewatered by the ceramic tube; consequently the pores remained largely free of blockage. The rate of water extraction however was substantially lower than observed previously with the beaker containing water only.

4.2 Investigations Related to the Full Size Capillary/Evaporative Device

4.2.1 Small scale experiments

The outcome of the preliminary studies were considered to be sufficiently favourable to continue the design of a full size device. This device should be capable of extracting water from a suspension at a commercially acceptable rate.

Prior to undertaking costly and time-consuming full scale tests, the performance of a small scale device in dewatering a concentrated suspension of china clay in water (i.e. 58% by weight) was investigated. Apart from the total extraction rate of water, the range of influence of the device was also examined by taking and analysing samples for water content at certain distances from the device, at the end of the test. The small device consisted of two 25 cm long by 5 cm outside and 3 cm inside diameter tubes clamped together and with a 17.4 cm diameter disc fixed concentrically at the upper end. The average pore size of the tubes was 15 μm and that of the disc 70 μm. The use of the large pore size disc was due to the unavailability of smaller pore size discs or tiles on the British market. It was subsequently discovered however, that tiles or discs of a range of pore size could be obtained from a German manufacturer.

The above device was 'primed' by saturating it with water and then placed into the centre of a rectangular container of 32.5 cm by 12.5 cm by 15.0 cm high, filled with a suspension containing 58% of clay by weight (see Fig. 2).

The surface of the container was covered with a plastic sheet, to prevent evaporation from the free surface. A fan equipped with an adjustable speed drive was used to provide an air flow of 4 m/s velocity at the device. The rate of extraction of water was determined by periodically weighing the entire apparatus on an accurate scale.

The history of the weight loss recorded is as follows:-

First day	(2 hour period)	67.5 gm/hr
Second day	(3 hour period)	19.2 gm/hr
	(after weekend)	
Fifth day	(2 hour period)	17.6 gm/hr
Fifth day	(2 hour period)	20.3 gm/hr
Sixth day	(2 hour period)	27.5 gm/hr
Sixth day	($1\frac{1}{2}$ hour period)	25.7 gm/hr

The initially high rate of 67.5 gm/hr was due to the gradual removal of moisture from the disc, which owing to its large pore size had not been re-saturated by capillary action, hence it took no part in the extraction of water from the suspension. The low rates on the second and fifth day coincided with a high level of atmospheric humidity.

Following these tests samples were collected by inserting a brass tube into the full depth of the suspension at 4.5 cm, 7.5 cm and 13.5 cm from the centre of the container and the solids concentration of these samples was determined by heating them in an oven at 100° C and measuring the loss of weight as described by the appropriate British Standard (see Ref. 5).

The solids concentration of the sample closest to the device was found to be 64.9% and 62.2% at 7.5 cm and 59.7% at 13.5 cm away from the centre of the container. Since the initial solids concentration was 58%, a significant quantity of water was extracted from a suspension which can be considered to be virtually unfilterable by mechanical means.

The results indicate a definite concentration gradient away from the device which is likely to be steeper in the immediate vicinity of the tube, although no sample was taken due to practical difficulties, to confirm this.

In these tests the section of the evaporative disc was dictated by the availability rather than by the technical requirements. Consequently the results obtained gave a qualitative rather than a quantitative indication of the performance of a purpose designed full size device.

4.3 Initial Design of the Full Size Device

Following the completion of the preliminary studies, a tentative design for a full size device was drawn up, consisting of a vertical hollow cylinder or tube for raising water by capillary action and ceramic discs or tiles, fixed horizontally to the top of the tube, acting as evaporative surfaces (see Fig. 3). This arrangement was chosen basically for its simplicity of construction and installation. The principle of operation of this device is as follows.

Design is based on the assumption that under 'normal' atmospheric conditions (i.e. 3-4 m/s wind velocity, 50-60% relative humidity and 20° C air temperature) the evaporative surfaces become partially saturated. In this way, due to the large surface area being available for evaporation, a sufficient rate of water extraction can be achieved. This condition can only prevail if the appropriate flow rate can be supplied through the ceramic tube by capillary action. Therefore, in order to assess the feasibility of the proposed design, the maximum flow rate which could be raised by capillary action in the ceramic tube was estimated. The method of analysis is described in the following sections.

4.3.1 Pore size and extraction rate

Ceramic tubes are available in a variety of pore sizes ranging from 2 µm to about 300 µm in mean pore diameter. The first question is what pore size ceramic tube is able to deliver the maximum rate of flow to the evaporative surfaces located at h_i = .75 m above the water surface?

As an approximation let us consider the ceramic cylinder to be analogous to a bundle of capillary tubes of radius r_m, which is equivalent to the mean pore radius of the ceramic. On this basis, the height to which the water will rise (h_o) in a long ceramic tube can be expressed as:-

$$h_o = \frac{2\sigma}{r_m \rho g} \cos \alpha$$

where

σ = surface tension

ρ = density of water

g = gravitational acceleration

α = contact angle, i.e. for ceramic $\alpha \approx 0$

hence $\cos \alpha \approx 1$

The height of the ceramic tube (h_i) has to be substantially less than (h_o) to facilitate water to be delivered to the evaporative surfaces.

In an attempt to estimate the optimum pore size, the capillary flow rate through the ceramic tube has to be estimated. For the actual device this cannot be defined with any accuracy, because evaporation takes place along the whole length of the ceramic tube and an undefinable gradient in saturation concentration will form in both radial and longitudinal directions. For simplicity however, we can consider an ideal case, where all the flow rate drawn up by capillary action is delivered to the top end of the tube. This consideration leads to the following general assumptions, which facilitate the estimation of capillary flow rate:

(i) The top horizontal face of the ceramic tube is completely de-saturated.

(ii) The rest of the tube remains fully saturated.

In view of assumptions (i) and (ii) the pressure difference responsible for the flow along the vertical tube is:-

$$\Delta p = \left(\rho g h_i - \frac{2\sigma}{r_m}\right) \qquad (4.1)$$

Darcy's equation, which describes the flow through a porous medium in one direction (i.e. longitudinal) is:

$$q = -\frac{K}{\mu}\frac{\Delta p}{x} \qquad (4.2)$$

where

q = flow rate per unit cross sectional area

K = permeability

μ = dynamic viscosity

x = length

The flow induced by the capillary effect in a vertical ceramic tube then is:-

$$q = \frac{K}{\mu h_i}\left(\frac{2\sigma}{r_m} - \rho g h_i\right) \qquad (4.3)$$

The permeability can be expressed in general terms as:-

$$K = \frac{P r_m^{\,2}}{8} \times \frac{1}{T^2} \qquad (4.4)$$

where

P = porosity

$T = \frac{S}{X}$ = tortuosity

S = length of flow path

X = linear length

Equation (4.4) substituted into (4.3) gives:

$$q = \frac{Pr_m^2}{8\mu T^2 h_i} \left(\frac{2\sigma}{r_m} - \rho g h_i\right) \qquad (4.5)$$

For maximum flow, $\frac{dq}{dr_m} = 0$

After differentiating and assuming that the porosity and the tortuosity of the range of ceramics considered are identical, i.e. $\frac{P}{T^2}$ = constant we obtain:-

$$r_m = \frac{\sigma}{\rho g h_i}$$

for $h_i = .75$ m, and $\sigma = 73 \times 10^{-3} \ \frac{N}{m}$

the optimum radius, $r_m = 9.92$ μm.

The Aerolith grade ceramic with $r_m = 9.5$ μm is therefore the most suitable for this application.

In view of the complexity of the capillary flow combined with evaporation, the actual flow rate delivered to the evaporative surfaces can not be defined with any accuracy. It can safely be assumed, however, that the actual flow rate will always be less than the ideal flow given in equation 4.3. The determination of the ideal flow rate would therefore provide a useful guide ragarding the capacity of a given ceramic tube, consequently the feasibility of the proposed design.

i.e., for the proposed ceramic tube

$h_i = .75$ m

$r_m = 9.5\ \mu m$ and $K = 1.8 \times 10^{-12}\ m^2$

The value of K was determined experimentally by measuring the radial pressure drop across an Aerolith grade tube and the flow rate. It was then assumed that the permeability in the radial direction was the same as the longitudinal permeability.

The flow rate from equation 4.3 was found to be:

$q = 68.53\ (\ell/hr)/m^2$

Since the largest commercially available ceramic tube is of 70 mm outside and 40 mm inside diameter, the ideal flow rate for this tube is:

$q = .18\ \ell/hr$

This value is very small compared with the desired 1 ℓ/hr extraction rate, consequently the evaporative surfaces will only be marginally utilized.

4.3.2 Estimated rate of evaporation from the surface of a cylinder

The rate at which the water is removed from the surface of the ceramic cylinder by a stream of air can be evaluated with the aid of an empirical relationship for the mass transfer from the surface of a wet cylinder (as in assumption (ii) in the previous section) given in Ref. 6 as:-

$$(Sh) = .24\ (Re)^{.6} = \frac{h_c d}{D_{AB}}$$

provided the Reynolds number (Re) is between:-

$$10^3 < (Re) < 10^5$$

where

$$Re = \frac{ud}{\nu}$$

and

u = air velocity

d = diameter of cylinder

ν = kinematic viscosity

Sh = Sherwood number

h_c = coefficient of mass transfer

D_{AB} = diffusivity

We have selected a 'design' air velocity of 4 m/s, which for a d = 70 mm cylinder gives an (Re) of 18,543.

For water vapour in air at 20° C,

$$D_{AB} = 2.49 \times 10^{-5} \ m^2/s$$

hence

$$h_c = \frac{.24\ (Re)^{.6} \times D_{AB}}{d}$$

and

$$h_c = .03106 \ m^2/s$$

The saturation concentration of water vapour at 20° C is:-

$$C_{sat} = 17.3 \times 10^{-3}\ \text{kg/m}^3$$

If we assume that the relative humidity of the air is 50%, then the concentration of water vapour at 20^{o} C is:-

$$C = .5 \times 17.3 \times 10^{-3}\ \text{kg/m}^3$$

The mass transfer flux ϕ_c is:-

$$\phi_c = (C_{sat} - C)\ H_c$$

$$\phi_c = .967\ \frac{\text{kg}}{\text{m}^2\text{hr}}$$

The mass transfer from a .75 m long and 70 mm diameter cylinder, provided it is wet or fully saturated, is:

$$w = .16\ \text{kg/hr}$$

This value is considered to be an overestimate of the actual evaporation rate, because the surface of the tube could not remain fully saturated under the above atmospheric conditions. Furthermore, due to the evaporation from the surface of the tube, the flow rate delivered to the evaporative surface would be substantially less than estimated in the previous section.

4.4 Mathematical Model

The small scale preliminary tests and the order of magnitude estimates described in sections 4.2 and 4.3 indicated that the proposed device would be unlikely to provide a commercially acceptable extraction rate. For this reason, costly full scale tests, extending over a period of several months could not be justified. Instead, a simplified mathematical model of the device including 7 cm outside diameter ceramic tubes and a 60 cm diameter disc as the evaporative surface was adopted. The first of the ceramics was chosen to be 18 μm, which would provide maximum extraction rate from a depth of

0.75 m (see section 4.3.1). The above depth was considered to be the most likely for practical dewatering problems utilizing this device (ie. dewatering through impermeable crust in process lagoons).

The velocity potentials and the extraction rate by a typical capillary device were evaluated by solving Laplace's equation using the finite element method. A two dimensional section (i.e. the axisymmetric case) of the device together with the finite element grid and the permeable and non-permeable boundaries indicated are shown in Fig. 4.

The boundary conditions and the appropriate simplifying assumptions enabling a relatively simple solution to be achieved were as follows:-

(1) The permeability of the ceramic was the same in all directions (i.e. isotropic).

(2) The surface of the device above ground level was at a constant negative potential.

i.e. $K^1 \left(\frac{p}{\rho g} + h\right) = \phi = \text{constant}$

The maximum height of the device (h) above the water level was 77 cm (see Fig. 4) and the $\frac{p}{\rho g}$ term expressed as the capillary head $\frac{2\sigma}{r\rho g}$.

The permeability K^1 was related to the measured permeability of $K = 1.8 \times 10^{-12}\ m^2$

$$K^1 = \frac{K\rho g}{\mu} = 1.748\ m/s$$

In order to avoid a substantial overestimate of the velocity potential due to the capillary effect a correction factor $C_j = 0.85$ was used to compensate for the non-circularity of the pores of the ceramic. The constant negative potential along the exposed parts of the device was therefore as follows:-

$$\phi_1 = K^1 \left(-\frac{2\sigma}{r\rho g} \times C_j + h\right) = -.1108 \times 10^{-4}\ m^2/s$$

(3) The velocity potential along the surface of the lower part of the device, which protruded into a reservoir of water was $\phi_o = 0$. Hence the flow was produced by the potential difference $\phi_o - \phi_1$.

(4) The part of the ceramic tube extending from this water surface to the ground level was considered to form an impermeable boundary.

(5) The flow produced by the potential difference was assumed to discharge into an infinite reservor (i.e. atmosphere) without any further resistance.

4.5 The Finite Element Technique

The flow regime in an isotropic porous medium can be described by the Laplace equation i.e.:

$$\frac{\partial^2 \phi}{\partial x^2} + \frac{\partial^2 \phi}{\partial y^2} = 0 \qquad (4.6)$$

The Dirichlet boundary conditions for part of the boundary discussed above were:-

$$\phi = \phi_1 \text{ and } \phi = \phi_o \qquad (4.7)$$

The Neumann conditions for the remaining boundary (i.e. impermeable boundary) were:-

$$\frac{\partial \phi}{\partial x} = 0 \qquad \text{for } X = X_1 \text{, and}$$

$$\frac{\partial \phi}{\partial x} = 0 \qquad \text{for } X = X_2$$

For the finite element analysis the Laplace equation was not directly used, instead the following function which minimises the functional was employed (see Ref 7), i.e.:

$$X = \frac{1}{2} \iint_D \left[\left(\frac{\partial \phi}{\partial x}\right)^2 + \left(\frac{\partial \phi}{\partial y}\right)^2 \right] dx\, dy \qquad (4.8)$$

where ϕ (x, y) are admissible trial functions over the domain D, which satisfy the principal boundary conditions (4.7). The Neumann boundary conditions were satisfied automatically by the function in equation (4.8).

The capillary device may subdivide into triangular elements shown in Fig. 4 and the velocity potential (ϕ) in the interior of the element is approximated by a linear function of x and y, i.e.:

$$\Phi = a_1 x + a_2 y + a_3 \qquad (4.9)$$

The parameters a_1, a_2 and a_3 were chosen in a way that at the three corner points $\phi = \Phi_1, \phi = \Phi_2$ and $\phi = \Phi_3$. The resulting system of three equations enabled a unique solution of coefficients a_1, a_2 and a_3 for an element to be obtained. Substitution of the evaluated coefficients into equation (4.9) and differention of the resulting equation yielded values of $(\frac{\partial \phi}{\partial x})$ and $(\frac{\partial \phi}{\partial y})$. These values were then substituted back into the original function which provided the element matrix. This matrix for the axisymmetric solution had to be multiplied by the mean radial distance of the nodes of the triangle (see Ref. 8). The element matrices were then assembled and the resulting system matrix solved on a digital computer.

From the above analysis the total extraction rate of this device for a typical application would be about 0.16 ℓ/hr, which would probably be too low for commercial application.

4.6 Considered Variations on the Original Design

Considering the difference in surface areas and physical height, the results obtained on the small scale tests discussed in section 4.2 were consistent with those predicted by the mathematical model. Therefore in spite of the simplifying assumptions employed the target extraction rate of 1 ℓ/hr could not be obtained with the envisaged device. The reason for this is that most of the evaporative surfaces would not be utilized because of the inability of the single tube to supply sufficient quantities of water to those surfaces.

In order to overcome this shortcoming, two variations on the basic design were considered, i.e.:-

(1) To incorporate several additional ceramic tubes into the device.

(2) To settle for smaller capacity units, by using a small evaporative surface on a single ceramic tube.

Variation (1) seemed to be impractical due to difficulties of assembling and installing such a device and would also be too costly.

Variation (2) would deviate from our original idea of providing a dewatering device, which under ideal conditions could extract water at a rate of about 1 ℓ/hr. The need to install 4 or 5 times as many devices for a given duty as originally envisaged does not appear to be an attractive commercial proposition.

In view of the above considerations an alternative design for a dewatering device was sought.

4.7 Alternative Design of the Dewatering Device

4.7.1 General description

The proposed device consists of ceramic tiles arranged vertically in a star shape configuration. No horizontal evaporative surfaces are required in this design. The tiles are mounted in a metal frame, which is fixed to the central tube (see Figs. 5 and 5a). The lower part of this frame is constructed from 'T' sections, giving a sharp leading edge so that the whole frame can easily be lowered into the material to be dewatered.

It is known that, apart from the area, the geometry of the evaporative surfaces facing the wind direction will influence the rate of evaporation. This star shape arrangement, due to its symmetry, is expected to be relatively insensitive to wind direction. In this respect, therefore, the new arrangement is similar in behaviour to the initial device. However, disregarding the extraction rate under ideal condition, this arrangement seems to have two distinct advantages over the initial design, which are:-

(1) In view of its much larger equivalent diameter (i.e. 750 mm compared to 70 mm) the range of influence of the new device in wet soils or in semi-consolidated suspensions is likely to be much greater than that of the initial device.

(2) The horizontal evaporative surfaces of the initial arrangement have to be joined to the ceramic tubes. As a result, each device would have at least three joints. These joints always provide additional resistance which would further reduce the extraction rate of the device. At present, the tiles of the new arrangement are supplied in 500 mm lengths, therefore one joint per limb is required above the water surface. However, it is likely that in future the tiles can be acquired in 1 m lengths which would eliminate the need for joints.

The total surface area of the proposed device is approximately the same as that of the initial arrangement and is expected to extract water at a rate of 1 ℓ/hr (from water) under ideal atmospheric conditions.

4.7.2 Experimental arrangement

A full scale device has been constructed using Aerolith grade ceramic tiles of 500 mm x 250 mm x 20 mm. The device was placed in a plastic container filled with tap water and tested in the laboratory.

Air flow was provided by a fan fitted with a variable speed drive and measured by hot wire anemometer. The atmospheric humidity was determined with the aid of a wet and dry bulb thermometer.

Prior to the tests, a lid was placed over the plastic container to prevent evaporation from the free water surface. The rate of extraction of water was determined by measuring the drop of water level in the container with time, by means of a point gauge set in a measuring well.

4.7.3 Observations

The results shown in Fig. 6 were obtained on the same day, during which the atmospheric humidity remained approximately constant.

The extraction rate was found to vary substantially during the day, and the reasons for this are not clear. However, the overall performance of the device was found to be satisfactory. In fact, at some intermediate stage, the anticipated maximum extraction rate of 1 ℓ/hr has actually been exceeded. It is interesting to note that when no air flow was applied, between 5.25 pm and 9.15 am next morning an average extraction rate of 80 cm^3/hr was obtained, which was about 1/13 of the maximum rate obtained with an air flow of 2.5 m/s.

The device was then left to operate without air flow being applied for a long time (i.e. several months) and periodically examined. It was found that salts left behind by the evaporating water deposited on the surface of the ceramic tiles. The quantity of these white, flaky deposits has increased with time, however it must be emphasised that these deposits did not seem to have affected the capillary property of the ceramic. In other words, the capillary passages remained free from blockage.

CHAPTER 5. CONCLUDING REMARKS

(1) The originally considered dewatering device, consisting of ceramic tubes for raising the water and a ceramic disc as an evaporative surface would yield very low extraction rates, and would be unlikely to be suitable for the intended application.

(2) Although the star shaped arrangement, due to its much greater cross sectional area, would be capable of 1 ℓ/hr extraction rate under ideal conditions, the cost combined with the difficulty of installation would generally rule out the commercial application of this device.

(3) Market survey on dewatering techniques substantially ruled out the use of capillary/evaporative devices for dewatering process lagoons, although raised the possibility of applying this technique for the stabilisation of embankments and slopes in road cuttings. The findings of the market survey are described in Appendix I.

PART II

CHAPTER 6. THE USE OF CERAMIC TUBES FOR OIL/WATER SEPARATION

6.1 Introduction

On the basis of the technical conclusions and the market survey the commercial exploitation of the capillary/evaporative technique of dewatering cannot be envisaged. However, the capillary or water wetting property of industrial ceramics can in principle be employed for the separation of two immiscible fluids such as oil and water and may have commercial potential. The arguments and investigations undertaken are discussed below.

Oil/water separation is a major area of separation technology and covers a wide variety of techniques.

Most techniques employ the density difference between water and oil as a means of separation. The equipment which employs buoyancy without any further measures is referred to as a gravity separator. However, this type of separation is often inadequate and techniques are available to speed up the gravity process either by enforced coalescence or by employing a centrifugal acceleration much greater than gravity. Coalescence can be promoted either by applying an electrostatic field (i.e. electrostatic separator), or by passing the mixture through a coalescer material. Equipment using centrifugal acceleration is mostly restricted to centrifuges; however, the application of hydrocyclones is being promoted at present.

Flotation cells which utilise the surface property of the oil droplets in water (i.e. attachment of air bubbles) in addition to buoyancy are also used frequently to separate small quantities of oil from water.

The separation technique to be employed depends mainly on the size of the droplets present, on phase continuity (i.e. oil in water, or water in oil emulsion) and, to some extent, on the physical properties of the oil (i.e. density, interfacial tension and viscosity). The mixtures are classified into three distinct categories according to the size range of the dispersed phase, i.e.:

1)	primary dispersions	+50 μm
2)	secondary dispersions	20-50 μm
3)	true emulsions	-20 μm

Crude oil often emerges from a production well as a primary dispersion, with the dispersed phase being brine (formation water). The equipment for dewatering is, basically, a gravity separator employing heat, or enforced coalescence, to speed up separation. These devices are extremely large and occupy valuable space on a production platform.

Electrostatic separators and centrifuges are often used for coarse separation of secondary dispersions (e.g. fuel oil), while the fine separation of these dispersions is usually undertaken by fibrous bed coalescers. These devices used in large ships are required to remove the water contamination from fuel oil to a level below 50 ppm (see Ref. 9).

The main objective of the studies described in this part of the thesis is to evaluate the technical feasibility of two suggested techniques of oil/water separation, put forward in Chapter 7.

6.2 Existing Coalescer/Filters

Although coalescers are relatively recent separation devices, they are extensively used throughout industry for removal of traces of water from petroleum products and for the separation of traces of organic compounds from water. Their most common application is to remove small quantities of emulsified oil from water. The principle of separation is that, as the influent is passed through a porous bed, which in commercial coalescers is almost exclusively some type of fibrous material (e.g. glass-fibre), the dispersed phase is attached to the fibres. The droplets captured on the fibres will grow, or coalesce, as more droplets will impinge on the original droplets. Eventually the viscous drag force acting on the droplets will exceed the cohesion force to the fibres; hence, large droplets of the dispersed phase will emerge from the coalescer column. These droplets can be separated easily from the continuous phase by gravity.

A survey of the relevant literature revealed the following operational characteristics of the commercial coalescers:-

1) The efficiency of a coalescer in removing oil increases with increasing saturation until a critical saturation is reached (see Ref. 10). Beyond this saturation the efficiency of the device diminishes. At this stage, the cartridge containing the fibrous material is either discarded or regenerated, which occurs after about 6 hours of operation with an inlet oil concentration of about 200 ppm (see Ref. 11).

2) The head loss across the device increases with increasing saturation. The saturation increases with time of operation, flow rate and concentration of the dispersed phase (see Refs. 10 and 12).

3) An oil wetting, porous material demonstrates higher efficiency in removing oil than a water wetting material (Ref. 10).

4) The efficiency of a given device increases with increasing interfacial tension between the phases to be separated (Ref. 10).

5) Increase in the depth of coalescer bed generally results in improved separation efficiency (Ref. 10).

6) The relationship between pressure drop, flow rate and dispersed phase concentration is not understood at present; the empirical formulae available are valid only for a particular bed material and dispersed phase (Ref. 12).

CHAPTER 7. PRINCIPLES UTILISED FOR OIL/WATER SEPARATION

7.1 Two-phase Flow in Porous Medium

Instead of fibrous materials, let us consider the behaviour of a rigid, porous material (i.e. natural rock, ceramic, etc.) under two-phase flow conditions. Assume that initially the porous material is saturated with wetting fluid and a mixture of wetting and non-wetting fluid is introduced under pressure at one end (i.e. inlet) of the material. If the pressure is less than the capillary pressure corresponding to 100% saturation of the wetting fluid, the non-wetting fluid will not enter the pores. The wetting fluid passing through the material will obey Darcy's law, i.e.:-

$$Q_w = \frac{K}{\mu_w} A \frac{\Delta p}{L}$$

where

Q_w = flow rate

K = permeability

A = cross-sectional area

Δp = pressure drop

L = length

μ_w = viscosity (wetting fluid)

As the pressure is increased above the 'threshold' capillary pressure, the non-wetting fluid will enter the pores; however, no non-wetting fluid will emerge at the downstream face of the porous material until the critical non-wetting fluid saturation, S_{cnw}, is achieved, which corresponds to the establishment of a continuous phase of non-wetting fluid in interconnecting channels.

A typical capillary pressure saturation curve is shown in Fig. 7.

S_{cw} is the critical value of wetting fluid concentration which cannot be reduced by injection of non-wetting fluid.

Let us consider the case when a given proportion of wetting and non-wetting fluid is pumped through the porous material continuously. Following a period of establishment of equilbrium saturation, the composition of the outflow becomes the same as that of the inflow. Since the two fluids will pass through different passages, Darcy's formula will apply to each of the phases (see Refs. 13 and 14):-

$$Q_w = - \frac{K_w}{\mu_w} A \frac{\partial p_w}{\partial X} \tag{7.1}$$

and

$$Q_{nw} = - \frac{K_{nw}}{\mu_{nw}} A \frac{\partial p_{nw}}{\partial X} \tag{7.2}$$

suffices w and nw represent the wetting and non-wetting phases respectively. However,

$$p_{nw} - p_w = p_c \tag{7.3}$$

After differentiating (7.3) with respect to the distance X measured from the inlet face, and substituting into (7.2), we obtain:-

$$Q_{nw} = - \frac{K_{nw}}{\mu_{nw}} A\left(\frac{\partial p_w}{\partial X} - \frac{dp_c}{dS_w} \frac{\partial S_w}{\partial X}\right) \tag{7.4}$$

(see Ref. 13).

Before examining the significance of equation (7.4), it is desirable to introduce the concept of relative permeability, i.e.:-

$$K_{rnw} = \frac{K_{nw}}{K}$$

and

$$K_{rw} = \frac{K_w}{K}$$

Typical relative permeability curves for oil/water are shown in Fig. 8.

The sum of the relative permeabilities ($K_{rnw} + K_{rw}$) is always less than 1 for two-phase flows.

It is known that, in the presence of a non-wetting fluid, no wetting fluid would cross the outlet face until the saturation there is $S_w = 1 - S_{cnw}$. This phenomenon is called the 'end effect' and the above saturation corresponds to zero capillary pressure on the imbition curve. However, since the permeability of the non-wetting fluid is zero there, the required Q_{nw} could only be passed if an infinite pressure gradient and an infinite saturation gradient exist at the outflow face. This implies that the flow passages of the non-wetting phase must converge, or, in other words, the non-wetting phase will accelerate towards the outlet face in order to satisfy the saturation requirement.

The experimental results of Richardson et al quoted by Collins (Ref. 13) showed basically good agreement with the above theory. They found that, during a steady state flow of Q_w and Q_{nw} through a porous medium, the saturation gradient occurred only in a short region, close to the outlet face. It is known that the extent of this region reduces with increasing flow rates of the two phases, therefore, in the event of high flow rates, the end effect may be ignored, as S_w, K_w, K_{nw} and p_c are independent of X. Hence, equations (7.1) and (7.4) are simplified to:-

$$Q_w = \frac{K_w}{\mu_w} A \frac{\Delta p}{L} \tag{7.5}$$

and

$$Q_{nw} = \frac{K_{nw}}{\mu_{nw}} A \frac{\Delta p}{L} \tag{7.6}$$

consequently

$$\frac{Q_w}{Q_{nw}} = \frac{K_w \mu_{nw}}{K_{nw} \mu_w} \tag{7.7}$$

K_w and K_{nw} are determined by laboratory measurements and expressed as functions of the wetting fluid saturation. For two given fluids passing through a porous medium, the saturation is defined by the flow ratio of the two phases.

On the basis of the above discussion, it appears that the wetting property, and the subsequent nature of the two-phase flow in a porous medium, may facilitate the development of two different types of oil/water separators. In the first instance, coalescence would be produced as a result of the continuous flow of the dispersed phase in separate channels, followed by gravity separation. Alternatively, separation of the dispersed phase (i.e. wetting fluid) could be achieved by applying pressures below the threshold pressure of a given porous material, which could be a fine ceramic, or some other suitable filter material.

7.1.1 General comments on a porous ceramic coalescer

The flow regime in fibrous beds and the subsequent coalescence of the droplets (see Ref. 12), seem to be substantially different from the two-phase flow in porous materials, described in the previous section. It appears that fibrous bed coalescers (when treating emulsions) are restricted to very low dispersed phase concentrations, mainly because the separating efficiency falls off as the bed becomes saturated. This would occur very rapidly at high dispersed phase concentrations. According to theoretical consideration, this restrictive operating feature should not apply to ceramic coalescers, because an equilibrium saturation would be established there, with the two fluids flowing in separate channels. For this reason it is conceivable that ceramic coalescers could be employed for a wide range of dispersed phase concentrations.

7.1.2 'Threshold' pressure oil/water separator

It has been discussed previously that, provided the 'threshold' pressure is not exceeded, only wetting fluid will pass through a porous material saturated with wetting fluid, while the non-wetting fluid is excluded from the pores. The threshold pressure is given by the following expression:-

$$P_{w,nw} = \frac{2\sigma_{w,nw}}{r} K \cos \theta \tag{7.8}$$

where

$\sigma_{w,nw}$ = interfacial tension (for definition, see Appendix II)

r = pore radius

K = shape correction factor

θ = contact angle between solid and wetting fluid

It is clear from the above expression that the contact angle for water should be small (i.e. strongly wetting) and the maximum pore size less than 1 μm to enable an adequately high pressure to be applied to the mixture.

With this arrangement, the mixture would be introduced through a manifold arrangement containing a large number of openings. The jets issuing through these openings would impinge on the interior surface of the porous tube, thus ensuring contact between dispersed phase and tube. The pressure applied to the incoming mixture would result in the discharge of the wetting phase.

The main advantage of this process, compared with a conventional coalescer, would be that only the wetting phase would have to be passed through the porous material resulting in a substantial saving in pumping costs. In addition, no gravity separation would be required to separate the two phases.

CHAPTER 8. EXPERIMENTAL ARRANGEMENT

In view of the fact that these investigations were considered to be of an exploratory nature, only moderate funds were allocated to this project. For this reason, a simple, functional rig was constructed to allow both methods of oil/water separation to be appraised, mainly by qualitative observations. A diagrammatic sketch of the experimental arrangement is shown in Fig. 9, and a photograph of the rig in Fig. 10.

8.1 Coalescer/Separator

8.1.1 Test conditions

Basically, two different sets of experiments were carried out on this arrangement. In the first instance, Shell Vitrea 68 grade oil was employed, while in the second instance commercial grade diesel oil was used.

The white, milky emulsion, produced by the mixing action of the Jabsco pump, was introduced to the interior of the tube through a manifold arrangement containing 30, 5 mm diameter holes. The jets issuing through the holes were designed to impinge on the surface of the tube, in order to prevent accumulation of debris and reduce the tendency for blockage. The device was submerged in water in the separating vessel.

Aerolith grade ceramic with an average pore diameter of 18 μm was used in both tests. Initially, a 55 cm long, 7 cm outside diameter and 4 cm inside diameter tube was used; then, in the second tests, a 50 cm long tube with 6 cm outside diameter and 4 cm inside diameter was used.

8.1.2 Prediction of flow rates

Darcy's formula for radial flow through a porous tube of length, L, can be expressed as:-

$$Q = \frac{2\pi KLr}{\mu}\frac{dp}{dr} \qquad (8.1)$$

after re-arranging and integrating (8.1) we obtain:-

$$Q = \frac{2\pi LK}{\mu \ln\left(\frac{r_o}{r_i}\right)} \Delta p \qquad (8.2)$$

where

r_o = outside radius

r_i = inside radius of tube

L = length

The single phase permeability of an Aerolith grade ceramic tube was measured and was found to be $K = 1.8 \times 10^{-12}$ m^2. For a pressure drop of 1 bar (i.e. 10^5 N/m^2) the flow rate of water through the tube would be:-

Q = 100 ℓ/min

thus

Q = 955 ℓ/min/m^2 of tube area

However, if both water and oil are passed through the tube, the relationship between the flow rates of wetting and non-wetting fluids after equilibrium becomes:-

$$\frac{Q_w}{Q_{nw}} = \frac{K_w \mu_{nw}}{K_{nw} \mu_w} \qquad \text{(see (7.7))}$$

Although the relationships between the relative permeabilities and wetting fluid saturations for the ceramic tube are not known, an order of magnitude estimate of the permeabilities can be made by utilising the expressions given by Jones quoted in Ref. 15, which are:-

$$\left.\begin{aligned} K_{nw} &= K(1 - 1.11\, S_w) \\ \text{and} \quad K_{rw} &= S_w^{\,3} \end{aligned}\right\} \qquad (8.3)$$

It is claimed that the above expressions apply reasonably well to most porous rocks where water is the wetting and oil the non-wetting fluid. The two-phase permeabilities would therefore be:-

$$\left.\begin{aligned} K_{nw} &= K(1 - 1.11\ S_w) \\ K_w &= KS_w^{\ 3} \end{aligned}\right) \qquad (8.4)$$

Assuming a 10% volumetric concentration of oil and a viscosity ratio of 5, and substituting equations (8.4) into (7.7), we obtain:-

$$9Q_{nw} = 5Q_{nw} \frac{KS_w^{\ 2}}{K\ (1 - 1.11\ S_w)}$$

hence,

$$\frac{9}{5}(1 - 1.11\ S_w) = S_w^{\ 3}$$

and

$$S_w = 0.72$$

therefore

$$K_{nw} = 1.8 \times 10^{-12}\ (1 - 1.11 \times .72) = 3.6 \times 10^{-13}\ \text{m}^2$$

and

$$K_w = 1.8 \times 10^{-12} \times .72^3 = 6.7 \times 10^{-13}\ \text{m}^2$$

The flow rates of the two phases through the ceramic tube at a pressure difference of 1 bar should be approximately:-

$$Q_w = \frac{2\pi L K_w}{\mu_w \ln\left(\frac{r_o}{r_i}\right)} \Delta p \cong 37 \ \ell/\text{min}$$

and

$$Q_{nw} = \frac{2\pi L K_{nw}}{\mu_{nw} \ln\left(\frac{r_o}{r_i}\right)} \Delta p \cong 4 \ \ell/\text{min}$$

CHAPTER 9. EXPERIMENTAL OBSERVATIONS

9.1 Tests 1 - Lubrication Oil

These tests were conducted with valve (2) (see Fig. 9) being closed and all the mixture was passed through the ceramic tube. The applied pressure was about 1.36 bar and was controlled by the bypass valve (6). The oil content of the mixture was about 10%.

The performance of the coalescer was found to be encouraging. Oil droplets emerged on the surface of the ceramic tube which rose rapidly to the surface of the water in the separating vessel. These droplets collapsed on the surface, creating pools of oil 2-10 mm in diameter. Eventually the whole liquid surface in the vessel was covered with a layer of oil. This oil, however, was found to contain about 0.5% water by volume in emulsified form.

Samples were collected from the emulsion upstream of the ceramic device and from the liquid near the surface of the separating vessel. Both samples stratified into three distinct layers after a relatively short period.

In the case of the emulsion sample, the oil layer at the top, containing a small proportion of emulsified water, was followed by a grey layer of flocculated oil and by a white, hazy liquid (predominantly water) at the bottom. The latter layer behaved as a very stable emulsion and remained 'hazy' for several weeks in a test tube. The top two layers of the sample collected from the separating vessels seemed qualitatively similar to those in the previous sample. However, the bottom layer became clear water very soon after the sample had been collected. This observation indicated that, although a substantial proportion of the oil emerged from the tube in the form of very fine droplets, these droplets coagulated almost immediately, leaving clear water behind. This phenomenon is not recorded in the relevant literature and is thought to be caused by the flocculating effect (i.e. neutralisation of the diffuse double layer) imparted to the droplets as a result of the flow through the ceramic tube.

It was also found that only minute traces of oil were present in the samples collected from the drain, although the arrangement was not designed to provide clear underflow.

The relatively high initial flow rate had diminished rapidly with time to about 1-2 ℓ/min in about 10 minutes. This drastic reduction in flow rate was caused by blockage of the pores by dirt particles in the mixture, rather than by non-wetting fluid saturation. In an attempt to free the pores, the pressure across the ceramic tube was reversed by connecting the interior of the tube to the suction side of the pump (i.e. backflushing). The applied pressure difference of an order of 0.8 bar produced a flow rate of 12 ℓ/min, indicating that a substantial amount of pore area had been freed from blockage as a result of the pressure reversal.

The inclusion of an oil filter downstream of the pump resulted in a gradual drop of pressure across the ceramic tube due to the blockage of the filter element. Complete blockage occurred after about 10 minutes of operation.

The excessive amount of dirt present in the liquid was partly due to atmospheric pollution through the free surfaces and partly to the inherent design and construction of the low-budget experimental facility (e.g. rust). A comparable degree of contamination is not expected to be present in oil/water mixtures of refined products.

Observations of coalesced oil droplets during partial blockage of the ceramic tube revealed that the droplets on the surface of the liquid were smaller (i.e. 1-3 mm diameter) than during the initial stage of operation (i.e. just after separation). However, judging by their colour, they seemed to be relatively free of water. This observation seems to indicate that, as the effective pore size reduced due to blockage, the selectivity of the ceramic had improved.

9.2 Tests 2 - Diesel Fuel

9.2.1 Feasibility studies

In these tests, a new ceramic tube (i.e. uncontaminated by other oils) was used, with the mixture being continuously recirculated into tank (1). The head differential across the tube was set to 1.2 m and the initial concentration of the mixture was about 60% of oil by volume.

The performance of the device in breaking down the white emulsion was found to be very encouraging. The relatively large droplets of oil emerging from the tube completely spread on the surface of the liquid in the separating vessel, forming a film of oil, which increased in thickness as the test proceeded.

Samples of the treated oil and that of the emulsified feed were collected in test tubes during the run, for visual assessment. The oil appeared to be clean and transparent, completely free of water, while the emulsion sample gradually stratified into two layers with a light coloured, opaque liquid on top and a slightly 'milky' liquid below. Both resulting emulsions (i.e. water in oil and oil in water) remained stable for several weeks.

The quantitative assessment of the efficiency of separation by the device is based on particle counts carried out on a Hiac particle counter. Although this instrument is unable to distinguish between solid particles (i.e. dirt) and emulsified droplets, the ceramic tube also acts as a filter, thus allowing accurate interpretation of the results.

The above instrument provides accurate results in the low and intermediate range of contamination levels, until the counter becomes 'saturated'. However, it ignores very fine particles (i.e. below 3.6 μm diameter). Generally, the contribution of these particles to the volumetric contamination level in parts per million is negligible.

Two separate samples of the treated oil were collected straight after the test run and the samples were analysed by BHRA staff experienced in contamination studies. The results of this analysis were very favourable. The particle counts showed the oil to be very clean, with an estimated overall contamination level of less than 1 part per million. Even if all the contaminant present was water, the separation efficiency would still be practically 100%.

The emulsion in the feed tank was sampled three days after the above tests, in order to allow the majority of the water droplets and solid particles to be separated from the oil by gravity. The result of the particle count of this sample showed a relatively high contamination level, corresponding to about 33 parts per million of contaminant. The particle counts of the samples are shown in Table 1.

In addition to the above studies, the flow rate through the device was measured by timing the rise of the liquid level in the separating vessel. It was found that initially the flow rate of the mixture through the ceramic tube was 2.5 ℓ/min, which gradually reduced to 1.0 ℓ/min after 10 minutes of operation (see Fig. 11).

At this stage the experiments on diesel fuel were discontinued as the feasibility of the technique was clearly demonstrated. These tests were followed by studies on Vitrea 68 Lubricating Oil under low operating pressures. The outcome of these were consistent with the earlier observations, described in section 9.1.

9.2.2 Additional studies

Following a further attempt to achieve efficient separation of water from Vitrea 68 oil, tests on diesel fuel were resumed. Prior to introducing the diesel fuel, the arrangement was flushed with clean water, in order to remove traces of lubricating oil as far as possible.

The main objective of these studies was to assess the effect of operating pressure on the performance of this device, both by measurements and by visual observations.

In the first test, the operating pressure was set to correspond to a head difference of 1.9 m across the device. However, soon after the start of the test, a phenomenon was observed which was not evident in the initial set of experiments. In the first instance, large 'flocs' or precipitates were found on the surface of the oil in the feed tank, and later a layer of flocs had collected at the oil/water surface in the separating vessel. Samples of the feed after stratification showed floc formation throughout the depth of the oil. These flocs seemed to have settled gradually, and collected at the interface, although a substantial amount of flocs remained suspended in the oil for several weeks.

The above phenomenon was probably caused by the action of some of the additives in Vitrea 68 Lubricating Oil, which could not be completely removed from the experimental arrangement. However, since the treated oil seemed to be free from visible contaminants, it was decided to carry on with the experimental programme as intended, bearing in mind the implication of the above phenomenon.

The apparatus was run at a range of supply pressures, with corresponding flow rates measured and particle analysis carried out on samples of the treated oil. The results of the particle analysis confirmed the findings of the preliminary test. At a moderately higher pressure (i.e. $\Delta h = 1.9$ m) the treated oil was even less contaminated than previously, with an estimated volumetric contamination level of 0.1 parts per million. However, this improvement was operationally insignificant because it was due to the replacement of the steel tiebars of the separating device with brass units, thus preventing rust particles contaminating the cleaned oil.

The results of the particle counts are shown in Table 2. In view of the very high counts in the oil sample obtained at 4.7 m head difference, the instrument probably reached its saturation, thus giving an underestimate of the contamination level.

It is clear from these results that the overwhelming proportion of the contaminants were water droplets, as the filtration efficiency of the 18 µm pore size ceramic would not change significantly with pressure differences within the range tested. Particularly, no significant amount of +20 µm solids could pass through this device.

The variation of contamination factor, defined as the ratio of particle counts between the contaminated and clean oil (i.e. that of $\Delta h = 1.9$ m) plotted against the mean particle size of each fraction for oil treated under different applied pressures, is shown in Fig. 12. These curves indicate the distribution and magnitude of contamination of the treated oil by water

The volumetric contamination levels of the analysed samples were evaluated with the aid of a simple computer program, assuming linear distribution of spherical droplets within each size fraction. These values were plotted against the diffential heads across the device (see Fig. 13). The graph clearly shows that a rapid rise in contamination level starts from about 4.0 m differential pressure, indicating a rapid breakdown of the mechanism responsible for separation of the two phases.

Flow rates of the mixture through the device were measured at differential heads of 1.92 m, 3.33 m and 4.73 m across the device, and the variation of flow rates per 1 m head was plotted against time (see Fig. 11).

The flow rates achieved in these experiments were disappointingly low. Less than 1/3 of the preliminary flow rate per m head was passed through the device during the initial period of the run. However, the flow rate diminished at a smaller rate than previously. After backflushing the device for about 30 seconds, the initial flow rate indicated in curve (B) could be re-established. This showed no irreversible mechanical clogging of the pores of the device occurred throughout the test runs.

A sample of water taken from the drain during the operation of the device at $\Delta h = 1.92$ m was found to be relatively clean (see Table 2). Most of the contaminants were below 20 μm, giving an estimated contamination level of 3 parts per million.

9.3 Miscellaneous Tests

An exploratory test was conducted on a chemically stabilised emulsion containing Walker's emulsifying oil in about 3% volumetric concentration.

The outcome of the experiment was quite unexpected. Three distinct layers were formed in the separating vessel, with quite clear water at the bottom, followed by a distinct layer of dilute emulsion and a concentrated emulsion at the top. The fact that the water remained quite clear during the operation indicated a strong flocculating effect associated with the operation of the device.

CHAPTER 10. THEORETICAL CONSIDERATIONS

It is generally accepted in petroleum science that, when two immiscible fluids (e.g. oil and water) are passed through a porous medium simultaneously, the two fluids will flow in distinct, separate channels. The wetting fluid will occupy the smaller and the non-wetting fluid the larger channels. This phenomenon can be illustrated by the following simple reasoning.

Assume that a mixture of wetting and non-wetting fluid is passed through a porous medium initially saturated with wetting fluid. The non-wetting fluid will enter all channels where the external pressue applied (p_{nw}) exceeds the capillary pressure. The latter is developed as a result of the interfacial tension and can be defined as:-

$$p_c = \frac{2\sigma_{o,w}}{R} \cos \theta \, K \qquad \text{(see (7.8))}$$

Since, for given fluids and media, p_c is inversely proportional to the pore radius (R), a critical radius must exist where $p_c = p_{nw}$. All channels whose radii are less than R_{cr} will exclude the non-wetting fluid.

In the light of the above reasoning, it is easy to appreciate the mechanism of separation of the two phases within the ceramic body, provided the oil droplets were comparable to, or larger than, the pore size of the ceramic. Although this condition may have applied to the majority of the oil droplets, particle analysis of the emulsion indicated a substantial amount of -10 μm particles present. The effective separation of those droplets could only be explained by collision and subsequent break-up within the pores.

The 'breakdown' of the separation mechanism at above 4.0 m head differential was thought to be caused by exceeding the capillary pressure in the majority of the passages, thus preventing effective separation of the two fluids. The fact that the 'breakdown' occurred within a narrow band of applied pressures was probably due to the narrow pore size distribution of the ceramic tube. In addition to the separation of the two phases within the body of the porous medium, it is also essential that the droplets of oil disengaging from the porous surface are sufficiently large (i.e. d > 1 mm), in order to ensure:-

1) Rapid gravity separation in the vessel.

2) Coalescence of droplets on impact with each other or with the oil/water interface.

Conversely, small droplets tend to coagulate and resist rupture for a long time, thus retaining some of the water within the clusters, precluding efficient separation.

The size of a disengaged droplet can only be estimated for an ideal condition when the droplet is formed very slowly at the end of a capillary tube. In this case the droplets will break off when the interfacial tension is balanced by the buoyancy, i.e.:-

$$\frac{4}{3}\pi R^3 (\rho_w - \rho_o)\, g = 2\pi r_c \sigma_{o,w} \qquad \text{(see Ref. 16)} \qquad (10.1)$$

where

R = radius of droplet

r_c = capillary radius

and R can be evaluated from equation (7.8), provided $\sigma_{o,w}$ is known.

However, in the case of the ceramic tube, the droplets are formed rapidly, consequently inertia and viscous forces will also affect the size of the disengaging droplets. In addition, overlap can occur between adjacent droplets on the surface of the tube, resulting in coalescence prior to disengagement. The size of the droplets could therefore be assessed by observations only.

CHAPTER 11. DESIGN SUGGESTIONS

The head discharge relationship of the two-phase flow through a ceramic tube can be assessed provided the two-phase permeabilities and the viscosities of the fluids are known. The performance of a coalescer however, depends on the size of the droplets emerging from the ceramic tube, which cannot be predicted for a given oil/water dispersion from available data.

A method utilising similarity considerations between two systems (1) and (2), might be employed for designing ceramic coalescers. The suggested method assumes that system (1) is known and it performs efficiently while system (2) (to be designed) is required to produce similar size droplets as system (1).

According to dimensional analysis, the size of the emerging droplets (in terms of $\frac{R}{d}$) is primarily a function of four non-dimensional groups of variables, which are:-

Reynolds number; $R_e = \frac{Vd\rho}{\mu}$

Weber number; $W_e = \frac{V^2 d\rho}{\sigma}$

Densimetric Froude number; $F_o = \frac{V^2 \rho}{dg\Delta\rho}$

Pressure coefficient; $C_p = \frac{V^2 \rho}{\Delta p}$

where;

V = velocity at exit

d = mean pore diameter

ρ = density of oil

σ = interfacial tension

$\Delta\rho$ = density difference between water and oil

Δp = pressure drop across tube

R = radius of emerging droplets

In designing system (2), it is not possible to ensure the similarity of all four non-dimensional numbers. However. on the basis of theoretical considerations (see Chapter 10) it is reasonable to assume that the separation within the pores and the emerging droplet size will mainly depend on W_e and F_o. Consequently R_e and C_p could be disregarded and the similarity requirement between systems (1) and (2) are simplified to:-

$$W_{e1} = W_{e2}$$

hence

$$V_2^2 = \frac{\sigma_2}{\sigma_1}\,\frac{\rho_1}{\rho_2}\,\frac{d_1}{d_2}\,V_1^2 \qquad (11.1)$$

and

$$Fo_1 = Fo_2$$

which gives

$$V_2^2 = \frac{\rho_1}{\rho_2}\,\frac{\Delta\rho_2}{\Delta\rho_1}\,\frac{d_2}{d_1}\,V_1^2 \qquad (11.2)$$

The two unknowns V_2 and d_2 can be found from the above equations. However, the exit velocities cannot be related simply to the flow rates of the oil, because of the end effect. The saturation of non-wetting fluid at the outlet face is reduced to the critical level (S_{cnw}), consequently V_1 needs to be estimated, prior to evaluating d_2 and V_2, from the following relationship:-

$$V_1 = \frac{Q_{nw_1}}{A_1 P_1 S_{cnw_1}} \qquad (11.3)$$

where;

A_1 = surface area

P_1 = porosity

The flow rate in system (2) is also related to the exit velocity by a similar relationship,

i.e. $Q_{nw_2} = V_2A_2P_2S_{cnw_2}$ (11.4)

It is considered that an adequate estimate of Q_{nw_2} can be obtained by assuming that $S_{cnw_1} \simeq S_{cnw_2}$, in which case;

$$Q_{nw_2} = \frac{V_2P_2A_2}{V_1P_1A_1} Q_{nw_1} \qquad (11.5)$$

From the viscosity of the oil in system (2) and the two-phase permeability of the ceramic (K_{nw_2}) the pressure drop required to pass a flow rate of Q_{nw_2} can be predicted from Darcy's equation (see 7.2).

The design suggestions discussed above would require further investigations to test their validity with regard to scale effects.

CHAPTER 12. SUMMARY AND DISCUSSION OF RESULTS

1) The oil in water emulsion of Vitrea 68 oil could not be separated efficiently with the 18 μm pore size ceramic tube. However, a strong flocculating effect was observed in the separating vessel, which was apparent throughout the full range of operating heads across the device (i.e. 2-15 m), resulting in a relatively clear underflow. This effect was also apparent when a chemically stabilised emulsion was passed through the device, resulting in the formation of three distinct layers of fluid in the separating vessel.

In the case of the diesel fuel a different behaviour was observed. Although the water in the separating vessel was clear at low operating heads, it became 'milky' and remained so when the breakdown of the separation mechanism was reached at $\Delta h = 4.73$ m.

2) The diesel oil/water emulsion was very efficiently separated by the device when operated at low differential heads. However, the start of the breakdown of the separation mechanism was reached at just over 4 m differential head, with a complete breakdown occurring at $\Delta h = 4.73$ m.

3) The substantial reduction of the flow rate observed in the subsequent tests (after contamination by Vitrea 68) was thought to be due to the effect of the traces of additives present in the system. This assumption, however, could not be verified as no new ceramic tube was available and the delivery period of these tubes was beyond the scheduled time-scale of these investigations.

4) Backflushing of the ceramic tube after 15-20 minutes of operation seemed to have restored the original flow rate, implying that the solid particles which were deposited in the pores were removed and, in addition, the saturation level of the oil in the tube had reduced to about the critical level.

CHAPTER 13. 'THRESHOLD' PRESSURE OIL/WATER SEPARATOR

13.1 Preliminary Considerations

In order to achieve a relatively high 'threshold' pressure, the porous material used here needs to be of very fine pore size (i.e. 1 μm or less) and strongly wetting to the dispersed phase. Due to the small pore size, the permeability of this material would also be very low, consequently this method is envisaged for applications only where a very small amount of the wetting phase needs to be removed. In addition, to avoid blockage of the pores, the mixture to be treated should be relatively free from solid particles.

The rate of water extraction by this device in a single pass cannot be estimated with any accuracy, because only a small proportion of the water within the device is in contact with a small proportion of the surface area of the porous tube in any instance during the passage of the fluid. It is likely, therefore, that the mixture would need to be recirculated to achieve the required level of purity.

13.2 Test Conditions

The white, 'milky', oil/water emulsion to be dewatered was produced by the mixing action of the Jabsco pump and contained Vitrea 68 Lubricating Oil.

The porous material tested was a diapore grade ceramic tube, 600 mm long, with an average pore diameter of 1 μm and 90 mm and 80 mm outside and inside diameters respectively. The manifold in the interior of the tube was 32 mm diameter, thin-walled copper tube, extending to 80% of the length of the ceramic tube, contained 30 holes of 5 mm diameter uniformly distributed along the length. The ceramic tube was saturated with water prior to the tests, in order to prevent oil from entering the pores.

13.3 Experimental Observations

Although this technique was envisaged to treat oil/water mixtures containing only a small proportion of water, for practical convenience the experiment was started with an emulsion containing only about 10% oil by volume. It was intended to reduce the water content of the mixture gradually, by continuous recirculation through the device.

The arrangement was operated at 2 m head differential and initially it was found to perform effectively in removing water from the emulsion. However, the pores of the ceramic became gradually clogged by dirt particles and after about 15 minutes of operation a virtually complete blockage occurred.

13.4 Discussion of Results

Since this technique was intended for the separation of small quantities of water from oil, the need for frequent backflushing with water to relieve blockage would clearly be undesirable, as extra water would be added to the oil. This consideration, combined with the tight time schedule and finances available, led to the decision to discontinue the experimental work on this technique.

However, the suitability of this technique to treat clean, refined products cannot be ruled out from the above observations. It is likely that blockage would be very infrequent in these applications and a suitable backflushing method could be devised to relieve blockage.

CHAPTER 14. CONCLUSIONS

1) Although the experimental work on the 'threshold' pressure separator was discontinued after some initial test runs, the feasibility of the technique for removing small quantities of water from refined products has not been ruled out.

2) The ceramic tube coalescer produced a very efficient separation of a diesel fuel/water emulsion, provided the applied head did not exceed the critical value (i.e. 4.0 m).

3) The lubrication oil/water emulsion was not separated to an acceptable degree by the ceramic coalescer, due to the unfavourable physical properties of the oil.

4) The brief experiment on a chemically stabilised emulsion suggested that this technique may also be suitable for 'creaming' emulsions.

CHAPTER 15. OVERALL ASSESSMENT OF THE PROJECT

The objectives set out in the proposal for research in liquid/solid separation shown in Appendix III could not be achieved mainly because the commercial exploitation of the capillary/evaporative technique of dewatering could not be realised. As a result no further funds could be obtained from NRDC. However, an article published in the Filtration and Separation (see Ref. 18) regarding oil/water separation by a ceramic tube generated a substantial interest and the technique may well provide the foundation for a very efficient oil/water separator.

It was clear from the onset (see Appendix III) that in order to open up new areas of activities for BHRA, namely in liquid/solid separation a wide range of research effort not connected to the capillary evaporative technique of dewatering needed to be undertaken. Unfortunately due to the economic climate prevailing during the time of the studies, financial contribution to explore some of the ideas indicated in the original proposal (Appendix III) could not be attracted. Nevertheless the idea of flotation in a centrifugal field produced by air injection into a hydrocyclone through a porous material has been patented by BHRA in 1983 (see Appendix IV). Unfortunately soon after the patent application, it was found that an almost identical technique had been developed in the U.S.A. for the treatment of fine coal.

The relevant U.S. patent was dated about 2 years after the original proposal in Appendix III and subsequent articles claim that this process is more efficient than the conventional gravity flotation and requires only 1/7 power consumption and 1/30 space of conventional flotation process, at the same throughput.

Following the completion of the studies on the 'passive' capillary device, the performance of which could not be controlled, the effort was diverted towards hydrocyclones. These devices are very widely used, mechanically simple, but operationally extremely complex and their performance depends on a wide variety of geometric and operational parameters. A consortium project (see Appendix V) on hydrocyclones supported jointly by the Department of Trade and Industry and commercial organisations is a going concern. An article, to be published in the next issue of Filtration and Separation, which describes methods of head recovery or energy saving related to hydrocyclones is shown in Appendix VI.

In addition to the consortium and a number of enquiries related to separation technology, a large research contract was recently obtained from the CEGB for the study of a cyclone system used for the removal of contaminated particles from the gas coolant.

Although the work in the capillary/evaporative technique of dewatering was not a commercial success, nevertheless on an extended time scale, it provided the foundation for substantial research income in wider areas of separation technology, as indicated above.

CHAPTER 16. REFERENCES

1) Krieger, J.H. 'Separation technology faces crises'. Chemical and Engineering News, 22nd August 1977.

2) Svarovsky, L. 'Solid-liquid separation'. Second Edition, Butterworths Publ., 1981.

3) Verwey, E.J.W. and Overbeek, J.T.G. 'Theory of the stability of lyophobic colloids'. Elsener Publ. Co., Amsterdam - New York, 1948.

4) Cedergren, H.R. 'Seepage, drainage and flow nets'. John Wiley & Sons Inc., New York, 1967.

5) BS 1016 Analysis and testing of coal and coke. BSI, 1960.

6) Leyton, L. 'Fluid behaviour in biological systems'. Clarendon Press, Oxford, 1975.

7) Verruijt, A. 'Theory of ground water flow'. MacMillan Publ., 1969.

8) Owen, D.R.J. and Hinton, E. 'A simple guide to finite elements'. Pineridge Press Ltd., Swansea, U.K.

9) Smyth, I.C. 'Small scale experiments on hydrocyclones for dewatering light oils'. Int. Conf. on Hydrocyclones, Cambridge, BHRA, Paper no. 14, October 1980.

10) Van Chieu, J. et al — 'Device for evaluating coalescence of oil emulsion'. Proc. ASCE Jnl. of the Env. Eng. Div., Vol. 103, April 1977.

11) Shah, B., Langdon, W. & Wasan, D. — 'Regeneration of fibrous bed coalescers for oil/water separation'. Environ. Sci. & Tech., Vol. 11. February 1977.

12) Jeater, O., Rushton, E. & Davies, G.A. — 'Coalescence in fibre beds'. Filtration & Separation, March/April 1980.

13) Collins, R.E. — 'Flow of fluids through porous material'. Textbook, Reinhold Publ. Corp., 1961.

14) Bear, J. — 'Dynamics of fluids in porous media'. Textbook, Elsevier Publ. Co., 1972.

15) Scheidegger, A.E. — 'The physics of flow through porous media'. Textbook, Elsevier Publ. Co., 1972.

16) Sherman, P. — 'Emulsion science'. Textbook, University of Toronto Press, 1974.

17) Becker, P. — 'Emulsions, theory and practice'. Textbook, Reinhold Publ. Corp., 1966.

18) Arato, E.G. — 'Oil/water separation by means of a ceramic filter tube'. Filtration and Separation, Vol. 19, No. 4, July/August 1982.

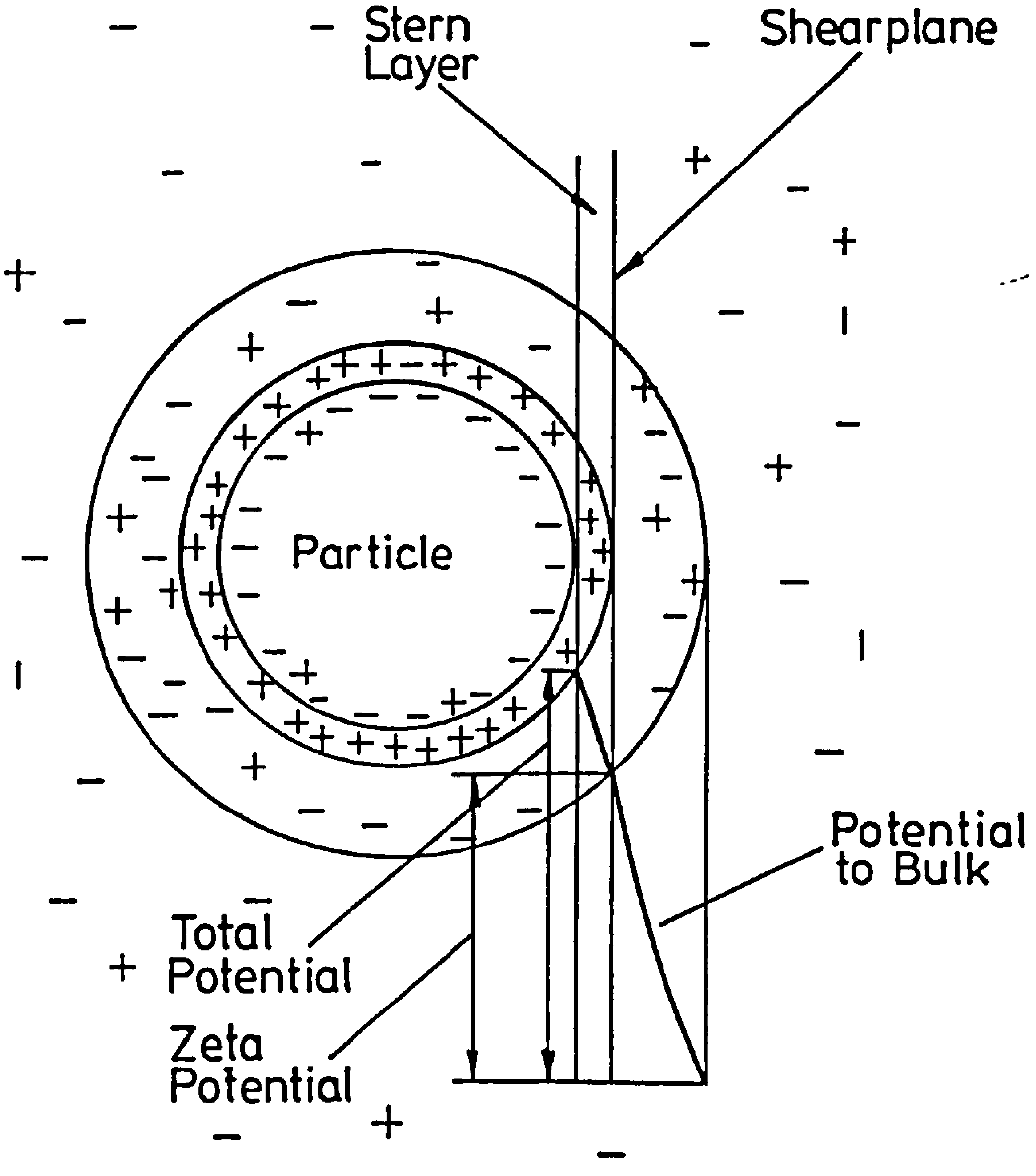

FIG. 1 COLLOIDAL MODEL

FIG. 2 DEWATERING CHINA CLAY

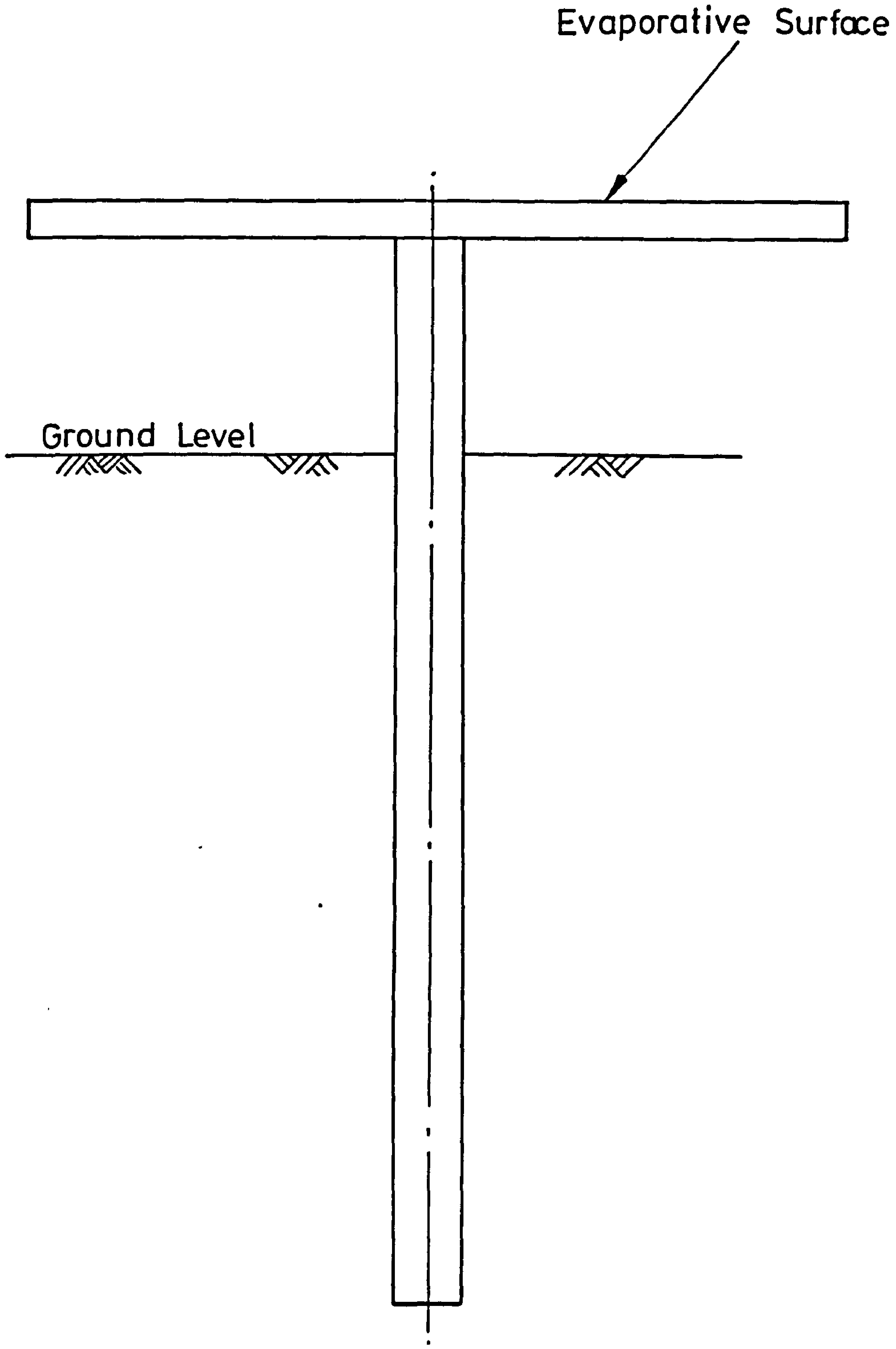

FIG. 3 FULL SIZE CAPILLARY DEVICE

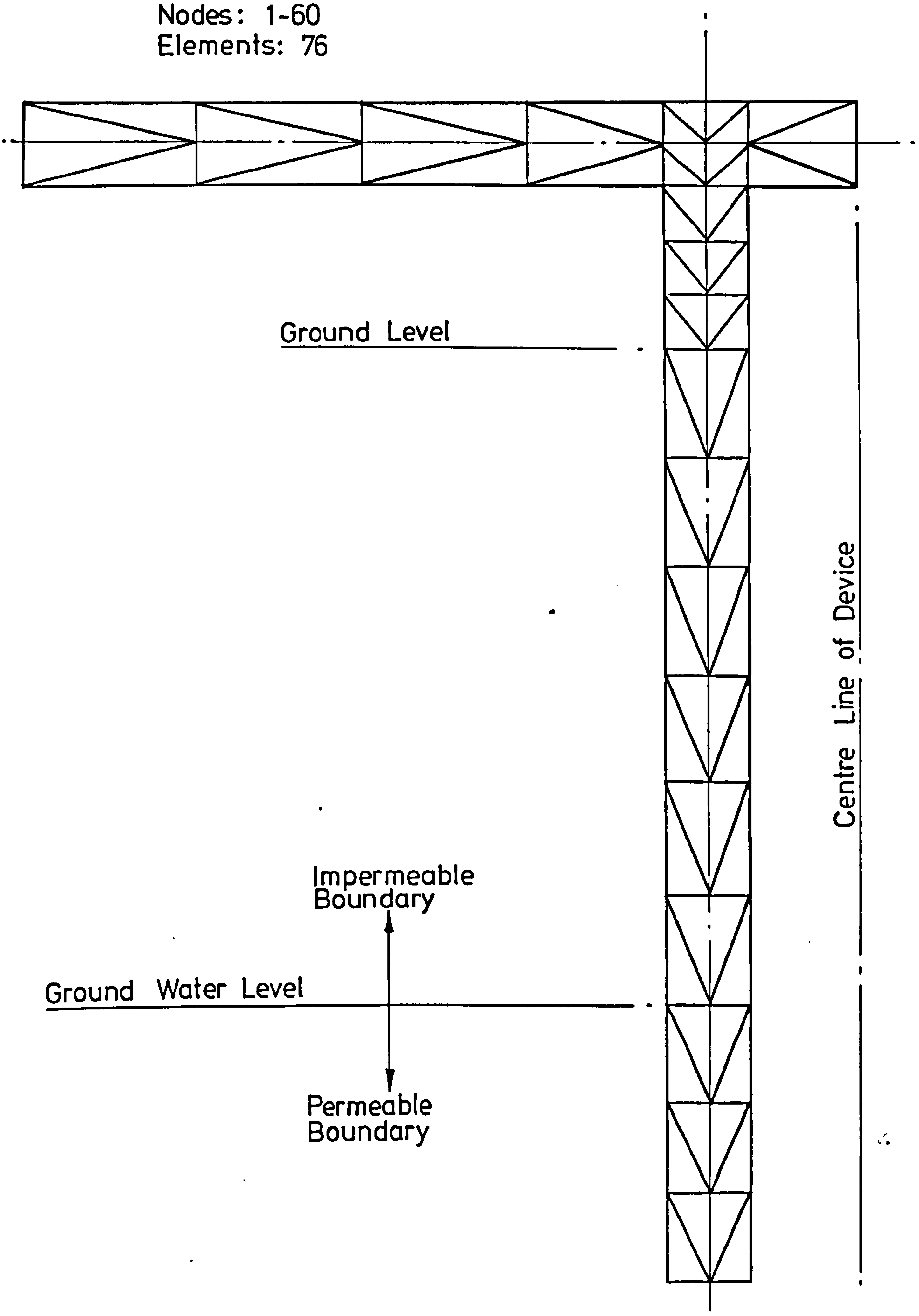

FIG. 4 FINITE ELEMENT SCHEME - CAPILLARY DEVICE

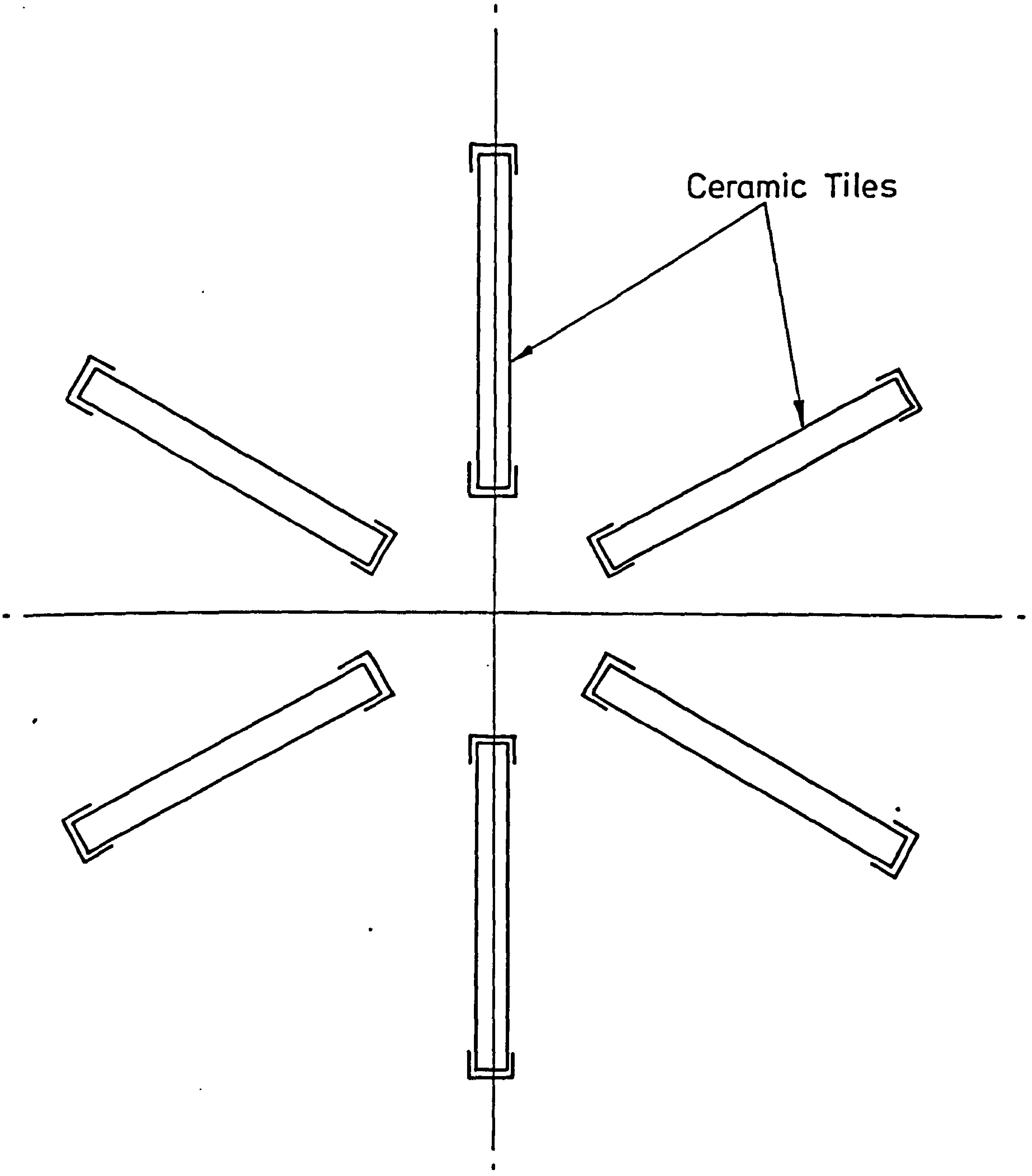

FIG. 5 PLAN VIEW OF ALTERNATIVE DEVICE

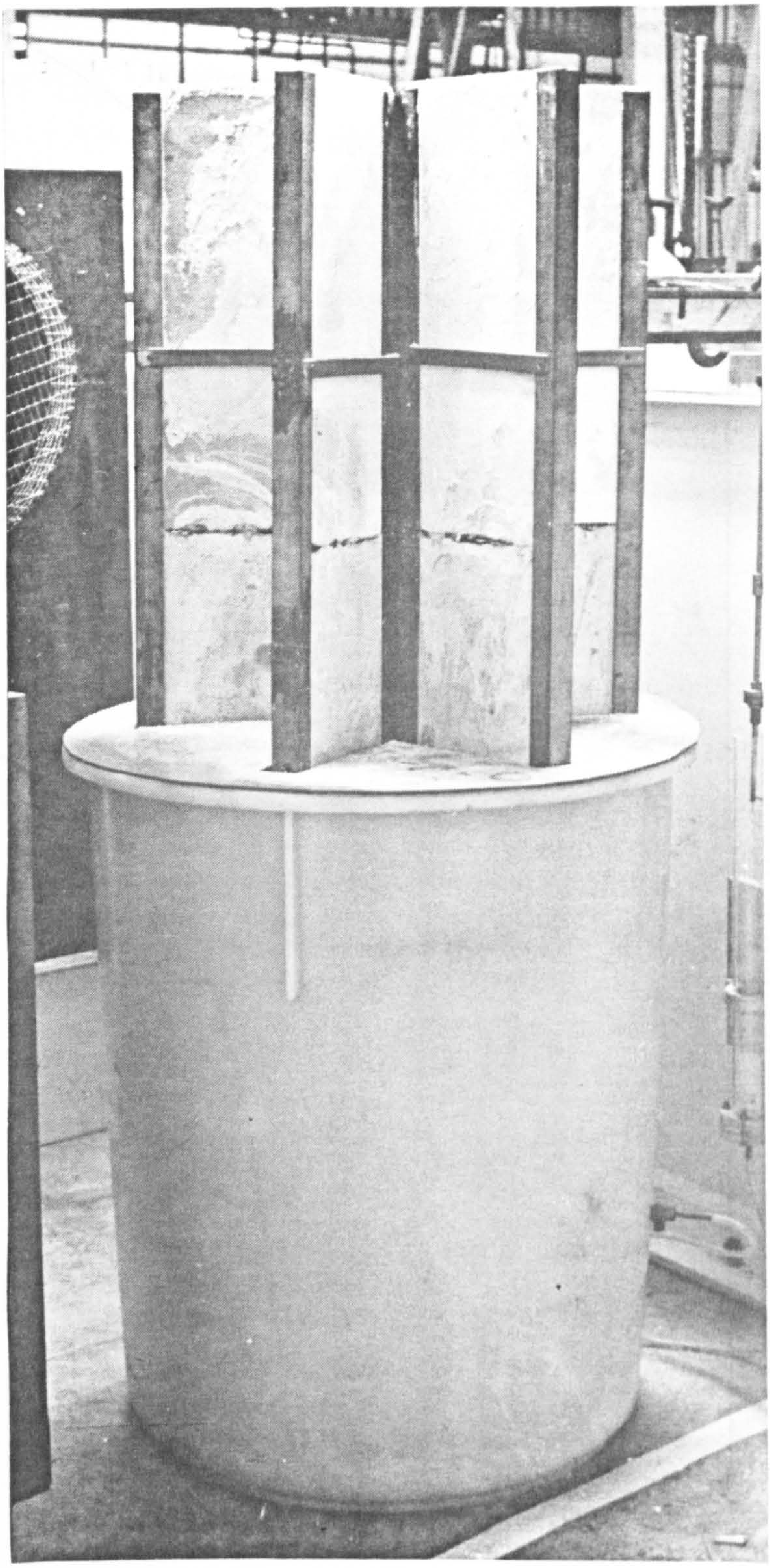

FIG. 5a DEWATERING BY THE ALTERNATIVE DEVICE

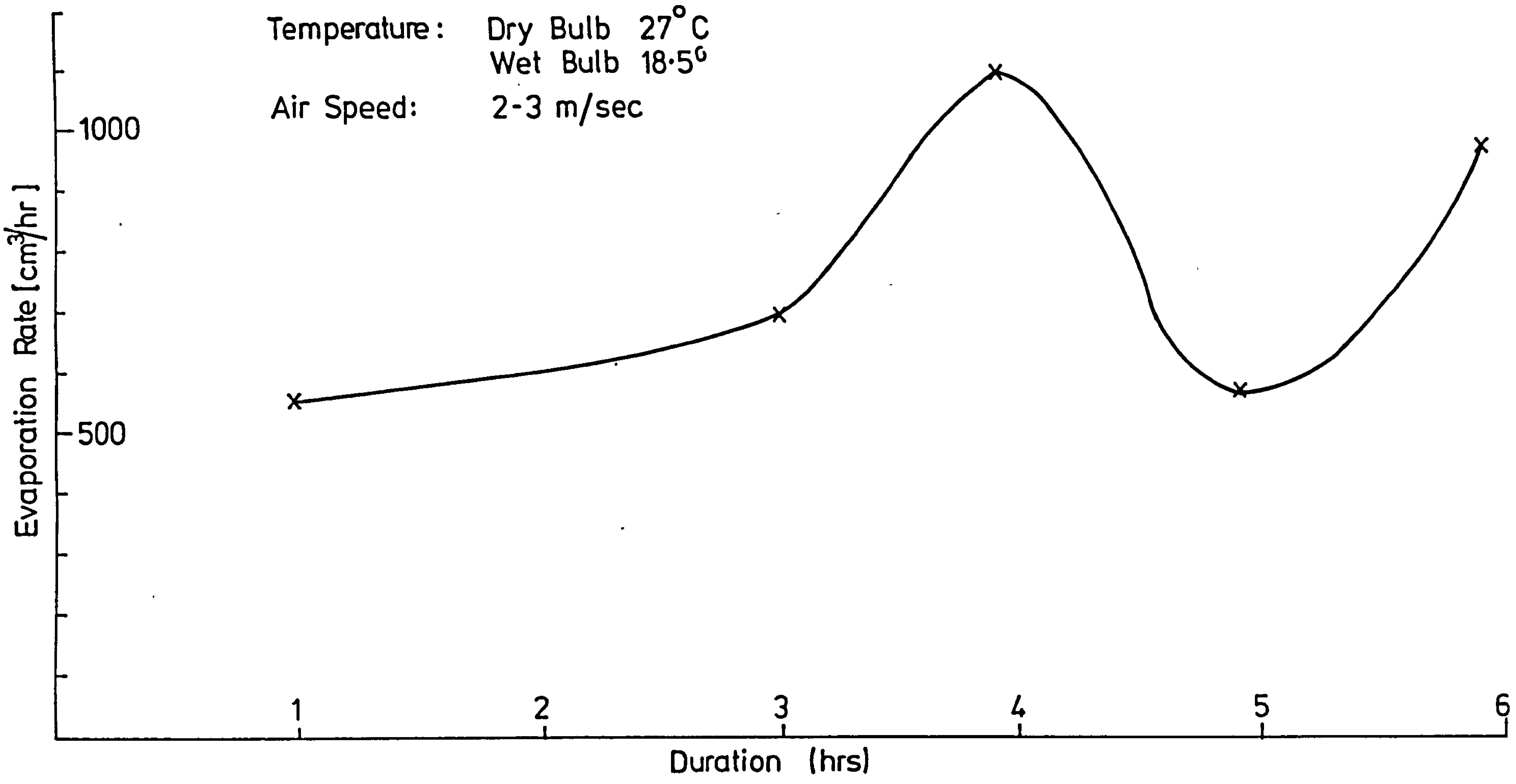

FIG. 6 EVAPORATION RATE BY THE ALTERNATIVE DESIGN

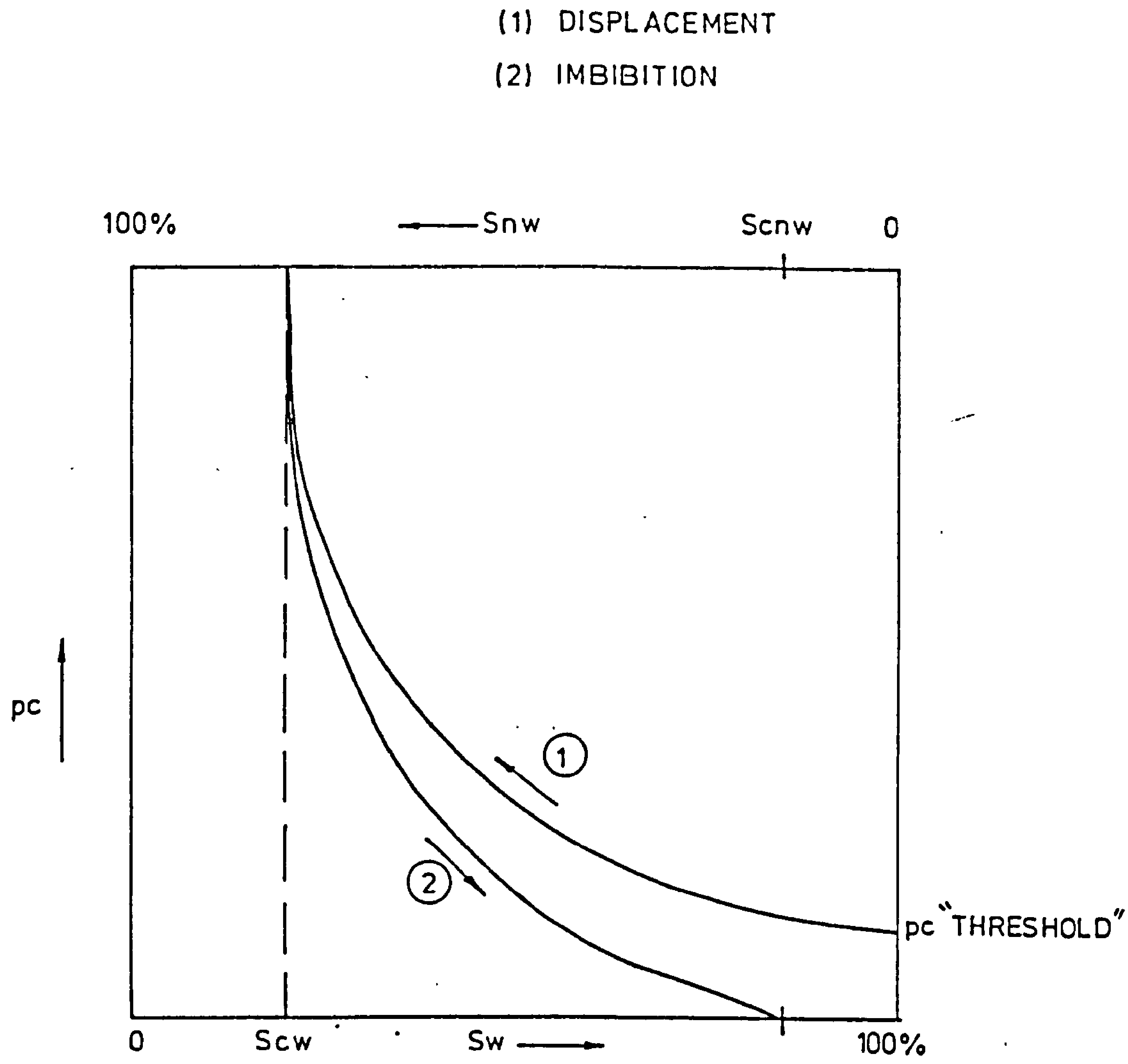

FIG.7 A TYPICAL CAPILLARY PRESSURE SATURATION CURVE.

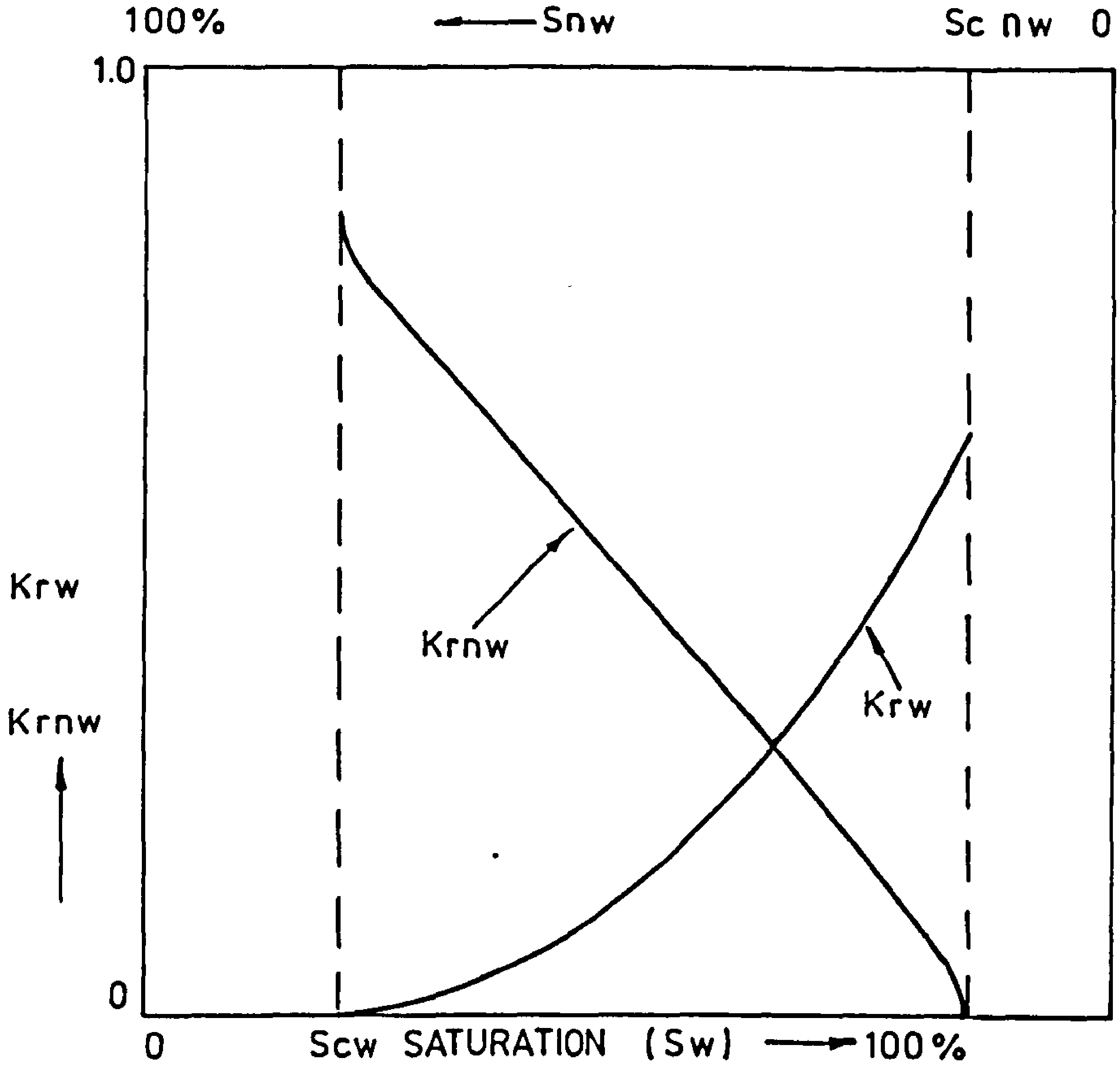

FIG.8 RELATIVE PERMEABILITY—SATURATION CURVES.

(4) & (5)	ROTAMETERS
P	JABSCO PUMP
(7)	CERAMIC TUBE
(3)	PRESSURE GAUGE

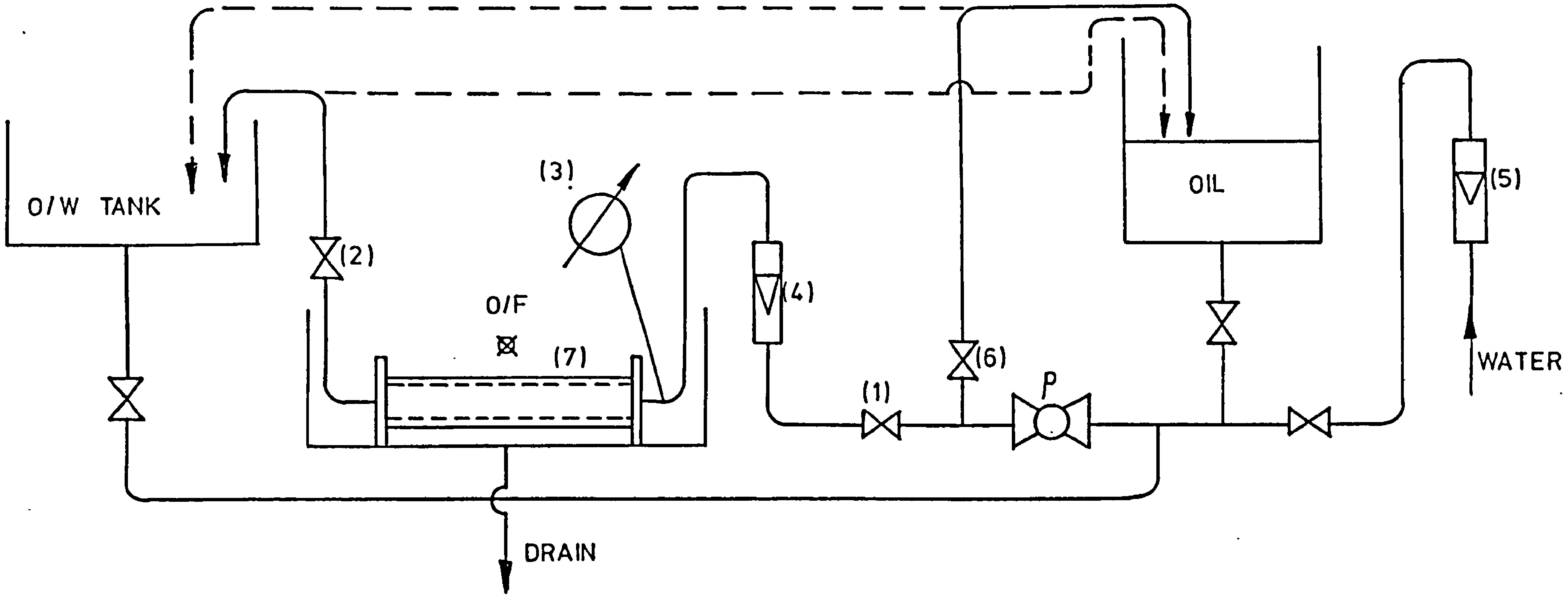

FIG. 9 DIAGRAMMATIC LAYOUT OF TEST RIG.

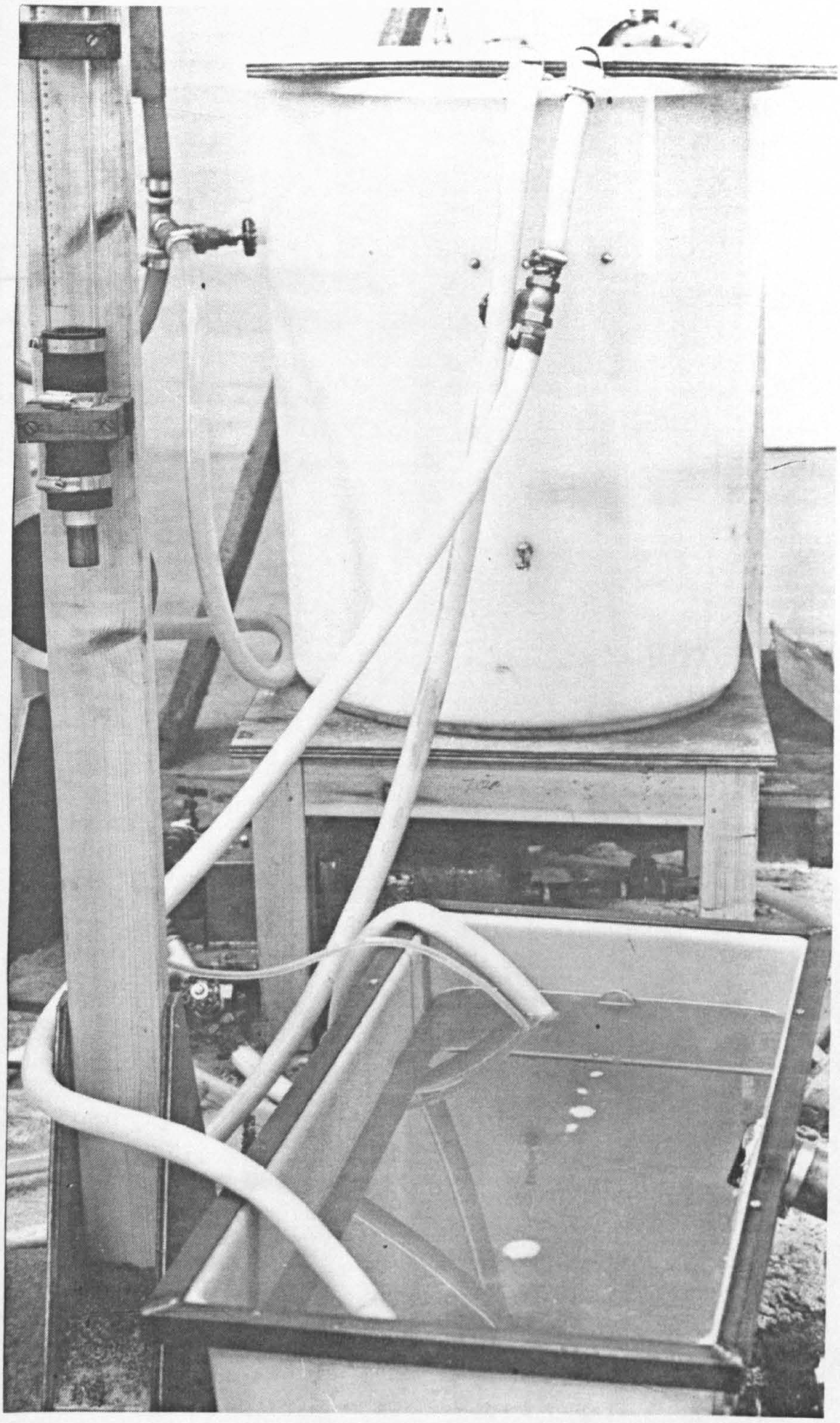

FIG. 10 EXPERIMENTAL ARRANGEMENT

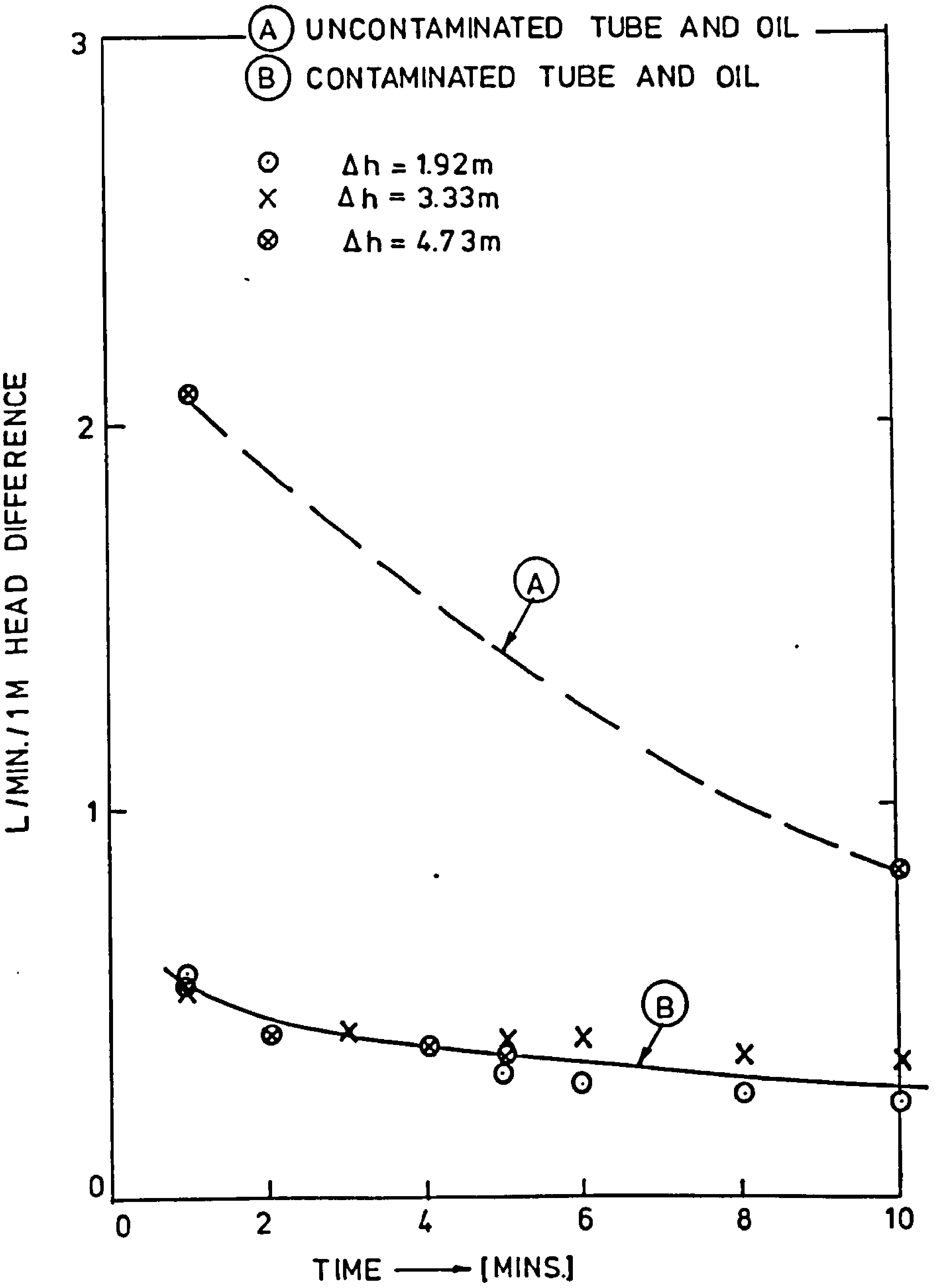

FIG. 11 FLOW RATE OF EMULSION OF 60% DIESEL AND 40% WATER [v/v].

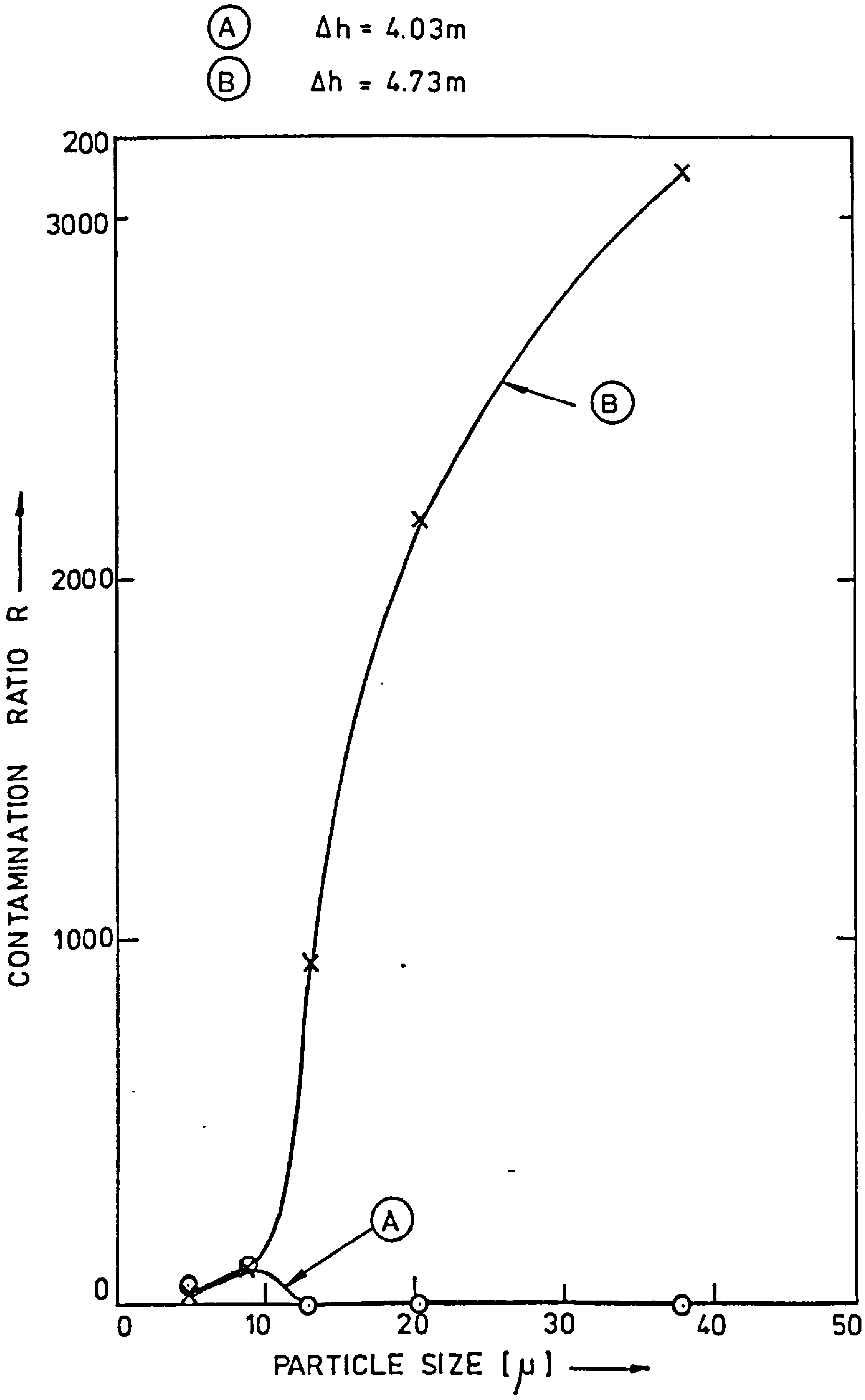

FIG.12 VARIATION OF CONTAMINATION RATIO WITH APPLIED PRESSURE.

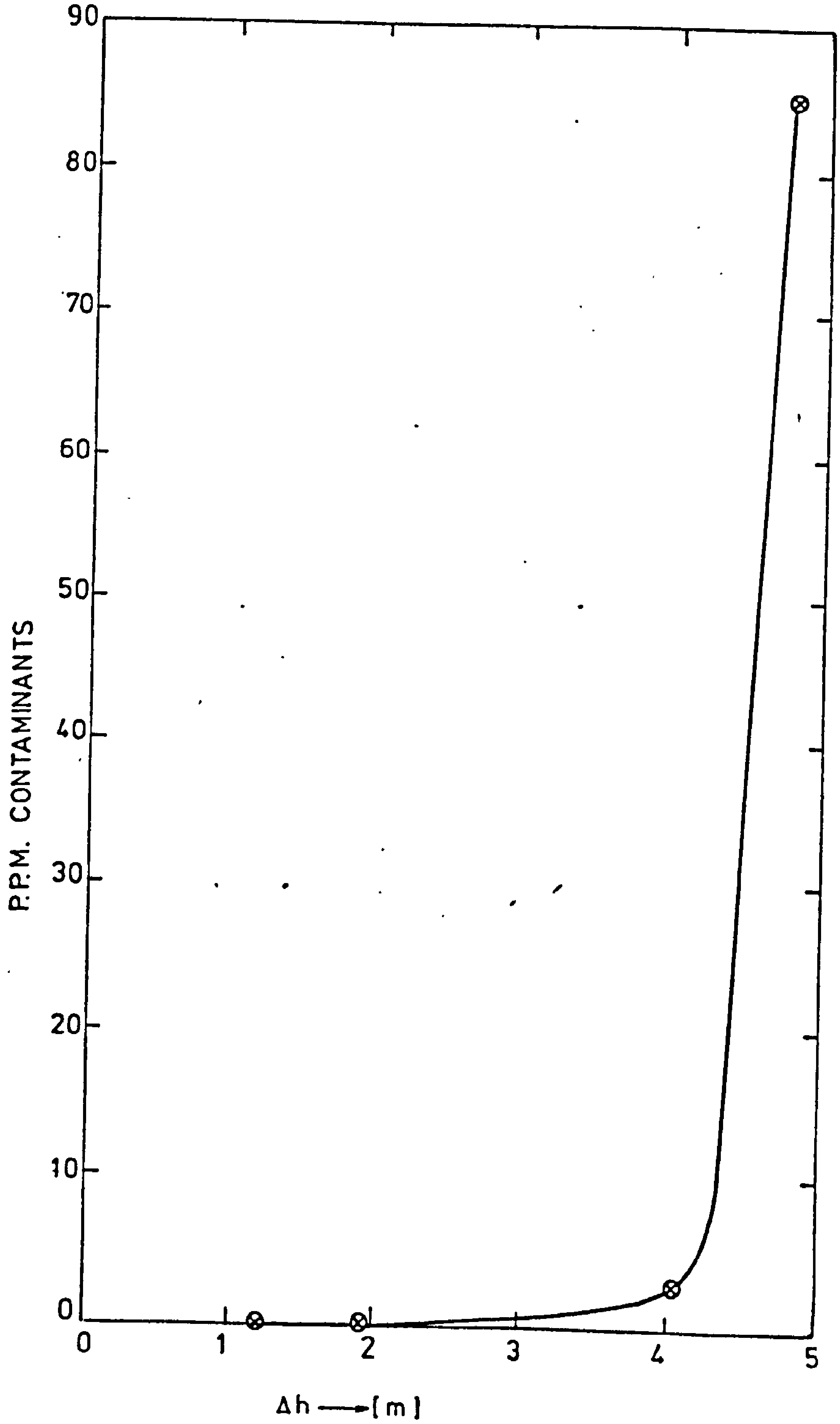

FIG. 13 TREATED DIESEL FUEL.

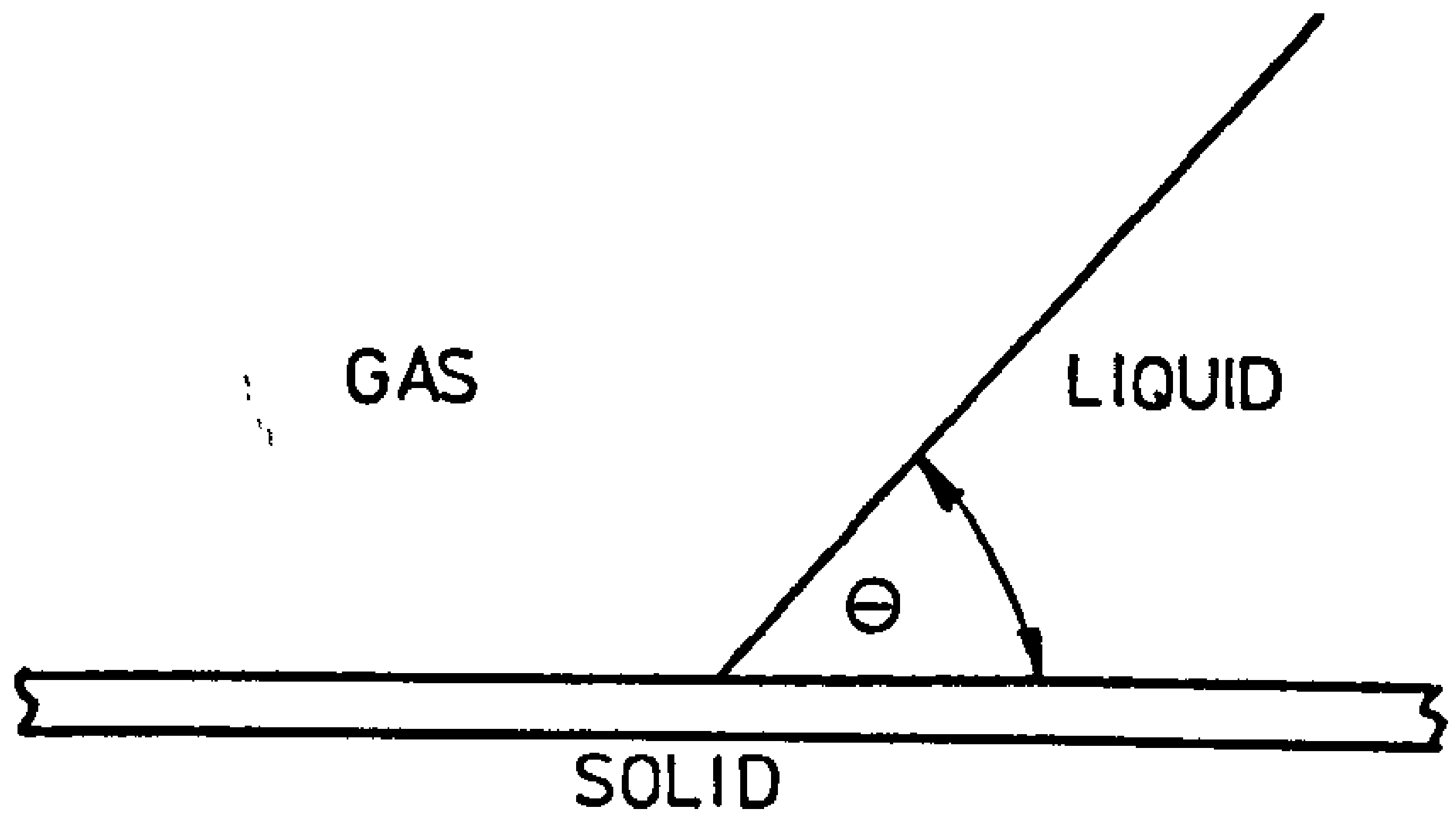

FIG. 14 CONTACT ANGLE.

Table 1.

Head across tube (m)	Sample	Comments		Particle or droplet size					
				3.6 µm	6.2 µm	11.0 µm	15 µm	26 µm	50 µm
1.2	Treated oil		No. of counts/50 mℓ sample	64,441	5,698	426	112	23	1
1.2	Treated oil			62,869	5,168	353	99	16	1
1.2	Treated oil			65,507	4,433	225	51	8	4
1.2	Treated oil			67,154	4,095	173	57	9	0
-	Untreated oil	3 days after test		856,165	738,098	462,960	181,262	11,570	458
-	Untreated oil	3 days after test		848,459	723,861	445,323	167,238	9,754	340

Table 2.

Head across tube (m)	Sample	Comments		Particle or droplet size					
				3.6 µm	6.2 µm	11.0 µm	15 µm	26 µm	50 µm
1.92	Treated oil		No. of counts/50 mℓ sample	22,664	3,978	623	215	13	4
1.92	Treated oil			21,890	3,575	516	193	19	1
1.92	Drain water			652,544	319,417	12,929	1,295	48	2
1.92	Drain water			694,361	330,890	12,231	1,291	36	0
4.03	Treated oil			674,276	377,412	12,275	4,867	1,725	123
4.03	Treated oil			695,570	310,788	3,372	437	27	1
4.73	Treated oil			1,260,354	1,119,711	910,753	470,987	54,660	250
4.73	Treated oil			1,239,229	1,098,855	793,833	457,824	50,025	161

APPENDIX I

MARKET SURVEY

1. Background

In order to expand BHRA's research and development activities, the Marketing Group conducted a preliminary market survey in the field of liquid/solid separation. This survey consisted of discussions with the representatives of BHRA members and clients from the process industries, where liquid/solid separation is a major activity. The discussions indicated the need for an effective and inexpensive technique of dewatering settling lagoons which have been filled up with sediment and are no longer in use. These lagoons can cover large areas (i.e. 50 acres per lagoon), and the sediment cannot be extracted unless some means of 'in-situ' dewatering is used, because the interior of the lagoons cannot be reached by heavy excavating equipment. The reason for this is that the natural processes of dewatering, such as seepage and evaporation, are thought to be ineffective beyond a certain stage due to the blockage of the strata underlying the lagoon and to the formation of an impermeable crust on the surface of the lagoon.

As a result of these discussions, it was decided to examine the feasibility of utilising the natural effects of capillary rise and evaporation for dewatering lagoons. It was considered by BHRA's Marketing Group that the development of a suitable 'artificial reed' was possible, and the technique would be inexpensive, as no power consumption and maintenance would be required. With these considerations in mind an application was made to NRDC for financial support of the development of a commercial device. This was granted initially for Stage I studies, which included the selection of a suitable material for the 'artificial reed' and some small scale dewatering experiments. In view of the promising results obtained, a provisional patent application was filed, and further funds were made available by NRDC for the Stage II studies, which included theoretical assessments and the design and some laboratory experiments on a full size device. From Stage I on, all the work involved in this study was undertaken by the author of this report.

During the course of the studies, it was discovered from an article in 'World Dredging & Marine Construction', April 1976, that a large scale research programme of 5 years' duration was being undertaken in the U.S.A. by the Army Corps of Engineers at that time, covering all aspects of dredged material disposal areas, including dewatering. Since this type of dewatering in essence is identical to dewatering settling lagoons, all available information on the above work was requested and subsequently received in the form of a preliminary summary report. This report described both laboratory and site tests conducted on a variety of innovative and conventional dewatering techniques, including progressive trenching, underdrains, low-voltage gradient electro-osmosis, vacuum well points, surface agitation, pressure injected sand slurry drains and capillary enhancement devices or wicks. With the exception of surface agitation, all techniques showed some degree of success, however, no other conclusions were drawn as the studies were still in progress.

The information regarding the capillary wicks was very brief, stating that these devices were made of wood fibre and plastic and the preliminary results seemed promising. It was not considered that this discovery should inhibit the development of a capillary device by BHRA, mainly because the above wicks had not yet been proved successful. In addition, both the performance and the preferred application of these wicks was expected to be substantially different from those developed by BHRA, due to the basic differences in the materials of construction.

Recently some final reports, including the 'Executive Overview' and 'Detailed Summary' of the whole project were received. The latter report concludes that the two most promising techniques for general dewatering applications are progressive trenching and underdrains. The final report on the evaluation of capillary enhancement devices has not yet been received.

2. Scope

In view of the diversity of dewatering activities, it was decided at the outset that the survey need only cover activities where the requirements in terms of extraction rate and degree of dewatering were thought to fall within the capability of capillary devices. On the basis of the preliminary market survey and relevant literature, discussed in section 1 of this Appendix, those activities were identified to be as follows:-

i) Dewatering semi-consolidated suspensions as occur in settling lagoons, or in dredged material disposal areas.

ii) Dewatering waterlogged grounds.

3. Objectives

The research funds received from the NRDC covered the laboratory studies only. The availability of further funds for site tests was conditional on finding an industrial sponsor who was prepared to share the costs and, at the same time, show that a substantial market would be available provided the device performed according to prediction. For the reasons discussed above, the market survey was conducted soon after the completion of the laboratory studies, with the following main objectives in mind:-

1) To explain the technique to potential users and thereby create an interest, which might result in financial contribution to site tests.

2) To identify specific areas of dewatering, where the capillary/evaporative technique could be a commercially viable proposition.

3) Assess the potential size of the market identified in (2).

4. Discussions with Potential Users

From the outcome of the preliminary market survey (discussed in section 1 of the Appendix), it was assumed that the main application of the proposed device would be for dewatering settling lagoons. With this application in mind, two questionnaires were prepared (see this Appendix), to enable the size of the market to be appraised. However, it soon became apparent that these questionnaires were far too elaborate for use either in discussions or in written communications and, in addition, they were basically irrelevant as very little activity (if any) had been going on with regard to dewatering settling lagoons.

A brief summary of the visits and telephone conversations with potential users of dewatering apparatus is given below.

Notes on a meeting with Sykes Construction Services Ltd., at Slough on Wednesday, 23rd April 1980

Present:
Mr. P.M. Cashman; Sykes Construction Services
Mr. E. Bearup; Sykes Construction Services
Mr. E.G. Arato; BHRA Fluid Engineering

Purpose of visit: To discuss questionnaires on market survey of the capillary/evaporative dewatering technique.

Discussion: Sykes expressed the view that the questionnaires were too elaborate at this stage and suggested that only questions 1-4 from the questionnaire for industrial users should be sent to appropriate organisations. The questionnaire should be accompanied by a letter which should include a statement saying that we have developed (or are developing) a low cost dewatering technique and need their co-operation for market evaluation. A positive answer to question 4 would lead to further contacts.

Mr. Cashman stated that in the past ten years they have received only two enquiries for dewatering lagoons, but no firm orders. In his view, dewatering of lagoons is only considered for purely commercial, rather than environmental, reasons at present. However, if a low cost technique could be developed, markets would be available because large organisations are embarrassed about the effect of their activities on the environment.

Sykes were interested in the possibility of using PFA material bound into suitable porous blocks with the aid of a binder, instead of ceramics, as the reduction in cost could substantially improve the marketability of the technique.

Mr. Cashman suggested that in dewatering road foundations it may be possible to use the capillary device instead of the present 'surcharge' technique. In this application, the rate of extraction of water need not be high as the proposed road location is known for years in advance of construction and steps can be taken to initiate dewatering. Sykes gave the name of an official at the South Eastern Road Construction Unit, Department of the Environment, as a possible contact.

Mr. Bearup suggested that, as in road construction, the area of peat to be excavated for use as power station fuel is known well in advance, therefore the relatively slow capillary technique might be applicable for dewatering.

Visit to Westminster Dredging Company Ltd., Bentley, 16th May, 1980

Present: Mr. P.G. Clutterbuck; Westminster Dreding Company
Mr. K. Back; Westminster Dredging Company
Mr. E.G. Arato; BHRA Fluid Engineering

Purpose of visit: Market survey.

After describing BHRA's involvement in dewatering and the development of a capillary/evaporative device, Mr. Clutterbuck explained that WDC's interest in dewatering is restricted to increasing the volumetric capacity of their dredged material disposal areas. At present one area is used for about 7-8 years, during which time the depth of sediment deposited is about 4-5 metres. If necessary, the capacity of the disposal area is increased by raising the height of the perimeter dykes around the area. Dewatering of the dredged material would increase the life of the disposal area.

The capillary/evaporative device could not be used for this application due to its low extraction rate and relatively high capital cost. Mr. Clutterbuck also commented that installation of these devices would be a major operation, as the dredged material cannot support any weight.

The view of both Mr. Clutterbuck and Mr. Back was that, in the event that these areas are reclaimed for building purposes, the capillary/evaporative technique could be a commercially viable proposition. Most likely sites for this type of land reclamation would be around the Manchester Ship Canal and Southampton disposal areas.

It was indicated that, at present, Land and Marine engineering, a subsidiary of WDC, is involved in reclaiming settling lagoons for the ICI Mond Division. However no further details were given.

Visit to South Eastern Road Construction Unit (Dorking)
Ministry of Transport, 22nd May, 1980

Present:
Mr. J. Wrightman; M.O.T.
Mr. S.J. Barnes; M.O.T.
Mr. E.G. Arato; BHRA Fluid Engineering

Purpose of visit: Market survey.

Mr. Wrightman and Mr. Barnes expressed interest in the capillary technique of dewatering and indicated that the most likely application would be for stabilising slopes (i.e. road cuttings, embankments) in low permeability ground. For a typical application the cost of dewatering should not exceed two pounds per m^2 dewatered. At present, a test site could be made available by Mr. Wrightman, covering an area of about 1000 m^2. For financing the site tests the Engineering Intelligence Unit of the M.O.T. could be approached.

A variety of other possible applications of this technique were suggested, which are:-

1) Increasing the thickness of the hard crust over soft ground to enable buildings to be erected.

2) Stabilising the landward side of embankments

3) Dewatering silt in port areas (e.g. 2,000 acres at CEGB, Peterborough).

Telephone conversation with Mr. Walton, Manager of Land Reclamation Scheme, CEGB Peterborough

To the question of dewatering filled up PFA (Pulverised Fly Ash) lagoons, Mr. Walton replied that no problems exist, as these lagoons after some time are covered with top soil and returned to agriculture. The natural processes of dewatering are adequate for the requirement.

Visit to Eastern Road Construction Unit (Bedford)
Ministry of Transport, 13th June, 1980

Present: Mr. R. Edwards; M.O.T.
Mr. E.G. Arato; BHRA Fluid Engineering

Purpose of visit: Market survey.

Mr. Edwards was very interested in the capillary/evaporative technique of dewatering and stated that there is a definite need for a new technique of dewatering soils whose permeabilities lie within the range of 10^{-5} to 10^{-7} m/s. At present, electro-osmosis may be used, however this technique is very costly and, in addition, is not suitable for every type of soil. Alternatively, ground freezing may be employed instead of dewatering in special cases (i.e. for an NCB mine shaft, ground freezing cost 3,000,000 pounds).

Mr. Edwards indicated that a possible application of the capillary technique would be for stabilising slopes, which is an operation frequently required in road construction. As an example he quoted the cost of a mechanical method of stabilisation (i.e. backfill) of an area of 640 m^2 as being 20,000 pounds. This could have been achieved equally by lowering the water table to 1 m below the surface, possibly by employing the capillary method of dewatering at a substantially lower cost.

At present a new and improved method of dewatering, called counterfort drainage, is used for stabilising slopes where the permeability of the soil is normally about 10^{-5} m/s or greater. Mr. Edwards, however, suspects that this method of drainage may produce long term instability in the slope. A typical flow rate extracted by these drains from an area of 160 m^2 was observed to be 1 gall/hr. This extraction rate could probably be achieved by the use of an estimated 10-15 capillary devices.

Two big operations are being undertaken at present by the Eastern Road Construction Unit:-

i) The Bell Common tunnel on the M25 at Epping.

ii) The A1(M) tunnel at Hatfield.

The dewatering operation using deep, sand-filled drains arranged along the whole length of the cut, costs about 250,000 pounds for each scheme.

5. Appraisal of the Survey

5.1 Semi-consolidated suspensions

The outcome of the survey with regard to dewatering semi-consolidated suspension with capillary devices was not encouraging. Although relatively few organisations were consulted, informal discussions with employees of ICI Mond Division, where large areas of lagoons are awaiting reclamation, confirmed this impression.

It appears from the discussions that active dewatering is only carried out when dictated by commercial factors. Otherwise, the filled-up lagoons are left to the natural processes of seepage and evaporation, and after a long period (i.e. many years) the lagoons are gradually covered with soil to facilitate landscaping or agricultural use. In view of the relatively low rate of dewatering by the capillary devices, it is unlikely that this method would be suitable when the need for dewatering is dictated by commercial factors. On the other hand, the cost of the devices and installation would probably be considered excessive when the reclamation is carried out for purely environmental reasons. An illustrative example, showing the estimated cost and time-scale of dewatering is given below.

<u>Example</u>: Let us assume that we need to dewater a lagoon 100 m x 100 m x 1 m deep, whose solid concentration is 40% by volume. A thin crust is formed on the top which effectively prevents surface evaporation and also prevents recharge due to rainfall.

If we employ simple capillary devices, consisting of two ceramic tubes and one tile, it is anticipated that we would require at least one device for every 10 m^2 of the lagoon; hence, the total number of devices would be 1,000.

If one device removes an estimated 0.25 ℓ/hr water as an average, the required time and costs for the 1,000 devices to increase the solids concentration from 40% to 60% would be as follows.

In order to increase the solids concentration to 60% we would have to remove 3,300 m^3 of water, hence:

$$0.25 \times 24 \times t = 3{,}3000$$

$$t = \frac{3{,}330}{6} = 555 \text{ days}$$

$$\sim 1.5 \text{ years}$$

Cost of a simple device, including likely discount for bulk supply
= 40.00 pounds

	Pounds
1,000 devices	= 40,000
cost of installation	= 4,000
cost of removal and cleaning devices	= 6,000
Total	= 50,000

Since devices are re-usable, charge 50% to project; the total cost would reduce to <u>30,000 pounds</u>

Hence, cost per m^3 of water removed = $\frac{30,000}{3,330} \simeq 10.00$ pounds

The preliminary report of the dredged material research programme in the U.S.A. gives estimated costs for dewatering disposal areas in terms of cubic yard space created, as ranging from 1.5 dollars to 4 dollars at 1975 prices. This, adjusted to m^3 and for inflation, would be 3.2 dollars to 8.5 dollars, or about 1.5 pounds to 3.9 pounds. In this type of dewatering, the cost of 10.00 pounds per m^3 of space created would be excessive.

5.2 Low Permeability Soils

Discussions conducted with senior engineers of the Department of Transport Road Construction Units revealed a need for an inexpensive technique of dewatering low permeability soils (i.e. 10^{-5} to 10^{-7} m/s) in connection with stabilising slopes. In these operations the rate of extraction required to maintain slope stability can be sufficiently low to fall within the capability of capillary devices.

The suggestion of contacting the Engineering Intelligence Unit of the Department of Transport was followed up and resulted in further discussions and eventually in an offer of sites and partial financing of the site tests, by providing and installing the necessary instrumentation. Negotiations are going on at present with NRDC for additional funds to carry out the site tests.

In addition to stabilising slopes, a number of other possible applications of the capillary device were mentioned (see section 4). Specificially, both the Transport and Road Research Establishment and the Building Research Establishment expressed interest in the outcome of the site test, when contacted by Mr. Jones of the Engineering Intelligence Unit of the Department of Transport. Further enquiries were received by BHRA from Civil Engineering Consultants, who are also awaiting the results of the proposed site tests.

5.2.1 Estimate of the potential market

This survey resulted in identifying one specific dewatering activity - namely slope stabilisation - where the capillary technique of dewatering can become a viable proposition.

The potential size of the market in slope stabilisation can only be estimated to an order of magnitude because no specific data could be obtained. However, from statements made during the discussions, and from site visits, an estimate of the market segment where the capillary technique of dewatering may be a feasible alternative to present techniques was attempted in the following manner.

It is reasonable to assume that 30% of the roads constructed in the U.K. are made in cuts, and in 10% of those cuts some means of slope stabilisation is required. This means that, for an estimated 1,000 miles of roads constructed in the U.K. per year, slope stabilisation is employed along 30 miles length of road, with slopes on both side. Frequently this is achieved by 'Counterfort' drainage at a cost of about 2 pounds per m^2 of slope area. This method, however, is not always effective, particularly when the permeability of the ground is less than 10^{-5} m/s, therefore costlier methods of slope stabilisation are required (e.g. backfill, retaining wall), where the cost may exceed 30 pounds per m^2 of slope area (i.e. 20,000 pounds for 640 m^2).

It may be assumed that a substantial market segment exists between the above extremes where, although gravity drainage is ineffective, slope stabilisation may be achieved by dewatering devices capable of exerting suction on the water-bearing strata. If we assume that this market segment covers about 20% of the market in slope stabilisation at an intermediate value of 15 pounds per m^2, then for 6 miles, or 10 km, length of road with slopes on both sides (10 m wide), this represents a market of approximately 3 million pounds per annum.

The survey described here did not cover all major organisations in the U.K. involved in relevant dewatering activities. The reason for this was that the field performance of a capillary device could not be predicted with confidence from laboratory studies, consequently the viability of the device had not been established. It was felt, therefore, that a costly market survey could not be justified at that stage, particularly bearing in mind that the technical aspects of the work were carried out on a low budget (total 12,400 pounds). However, in spite of this, the major objectives set out in section 3 were broadly achieved.

6. Conclusions

1) In view of the relatively high capital and installaton costs of the capillary devices, combined with a low rate of water extraction, this technique does not appear to be a commercially viable proposition for dewatering process lagoons and dredged material disposal areas. In addition, the effectiveness of capillary devices in these applications is also doubtful because, contrary to the preliminary information, dessication cracks will always develop in the surface crust, allowing evaporation to continue. Thus, the rate of dewatering would be unlikely to be accelerated substantially by the introduction of capillary devices compared with natural dewatering only.

2) There seems to be a definite need for an effective method of dewatering low permeability soils. The required rate of extraction of water in these soils could be sufficiently low for the capillary/evaporative technique to be used.

3) This technique of dewatering may be used for stabilising slopes when roads are built in cuts. In addition, there may be a significant market in dewatering embankments and consolidating ground prior to construction of buildings.

4) Site tests are to be carried out, and a continued survey of the market could be conducted with greater confidence if these tests are successful.

QUESTIONNAIRE FOR INDUSTRIAL USERS

PART I (Lagoons)

1. Estimated total acreage of sludge lagoons presently in active use in your industry

2. Estimated total acreage of dis-used lagoons in your industry, which are full of sediment at present

3. Estimated rate at which "filled up" lagoons are produced in your industry (i.e. acre/year)

4. Is it necessary to reclaim dis-used lagoons?

   If answer is YES, what does this involve?

   i extraction of sediment ....

   ii dewatering only ....

5. If answer to 4(i) is YES

   Does the sediment need to be dewatered prior to extraction?

   ....

6. If the answer to 4(ii) or to 5 is YES

   What means of dewatering have been used in the past?

   i Natural processes (i.e. evaporation, seepage) ...... ☐

   ii Active dewatering (i.e. mechanical means) .... ☐

   iii Combination of (i) and (ii) .... ☐

   Please indicate the proportions in terms of percentages of the three types used in the boxes above.

7. If the answer to 6(i) is 100%, have the natural processes been adequate in terms of

   i speed of dewatering ....

   ii dryness of dewatered product ....

8. If the answer to 7(i) and/or 7(ii) is NO:

Have the application of 6(ii) and/or 6(iii) been considered?

9. If the answer to 8 is YES:

(a) Why have 6 (ii) and/or 6 (iii) not been employed?

- i due to high costs .... ☐
- ii available techniques not considered suitable .... ☐

Please tick appropriate box

(b) What would be an acceptable cost in terms of m^3 of sediment dewatered? £.......

10. If answer to 6 (i) is less than 100%,

(a) please indicate:

- i the process(es) used ....
- ii the firms employed ....
- iii acreage dewatered ....
- iv depth of sediment dewatered ....
- v total cost of dewatering ....
- vi reduction of liquid content achieved

  from ..... % (v/v)

  to ...... % (v/v)
- vii approximate duration of the dewatering operation

  from ....

  to .... (dates)
- viii type and size range of material dewatered

  ...., ...

QUESTIONNAIRE FOR CONTRACTORS

Dewatering Sludge Lagoons

1 Please provide the following information regarding the enquiries you received in the last 5 years for dewatering sludge lagoons:

a) Number of enquiries received:

(i) From the UK ...

(ii) From overseas ...

b) Total acreage to be dewatered:

(i) In the UK ...

(ii) Overseas ...

c) Approximate total amounts quoted in present value:

(i) For the UK enquiries £ .....

(ii) For the overseas enquiries £ .....

d) Industries and Organisations involved:

(i) In the UK:

(ii) Overseas

2 Please give the following particulars of past dewatering contracts:

	i	ii	iii
Method or process used			
Acreage dewatered			
Depth of sediment dewatered			
Liquid content at start % (v/v)			
Liquid content at end % (v/v)			
Duration of operation (months)			
Type of material dewatered			
Size range of material dewatered			
Present value of contract			
Location of site			

3 Are you aware of other methods or processes, not included in (2), which are employed commercially to dewater sludge lagoons? If yes, please state.

4 Please identify UK firms involved in dewatering sludge lagoons

APPENDIX II

SURFACE AND INTERFACIAL TENSIONS

The surface tension between a liquid and its vapour or a gas is due to an imbalance of the molecular forces acting along the surface of the liquid. The combined action of these forces gives rise to an internal pressure, which induces the liquid to move, in order to attain an equilibrium condition (i.e. capillary rise).

The surface tension is analogous to the work required to generate a unit area of new surface (i.e. N/m) and is designated σ.

If a liquid is placed in contact with a plane solid surface, interfaces will form between each of the phases (see Fig. 14). The three phases will meet at a point where a contact angle θ exists between the liquid and the solid. If this angle is smaller than 90^o the liquid wets the solid, and if $\theta = 0$ the liquid will spread on the solid surface, forming a thin film. On the other hand, if $\theta > 90^o$, the liquid is referred to as non-wetting to the particular solid.

The contact angle θ can be expressed from the following relationship:-

$$\sigma_s - \sigma_{sL} = \sigma_L \cos \theta \qquad \text{(A.1)}$$

where

σ_s = interfacial tension between solid and gas (or vapour)

σ_{sL} = interfacial tension between liquid and solid

σ_L = surface tension of liquid

If the gas (or vapour) phase is replaced by another liquid (2), which is immiscible with the original liquid (1), the work of adhesion between the two liquids can be expressed as:-

$$W_a = \sigma_{L_1} + \sigma_{L_2} - \sigma_{L_1L_2} \qquad \text{(see Ref. 17)}$$

where

σ_{L_1} and σ_{L_2} are surface tensions of liquids (1) and (2)

$\sigma_{L_1L_2}$ = interfacial tension between the two liquids

The contact angle between liquid (1) and solid will be analogous to that in equation (A.1), i.e.:-

$$\sigma_{sL_2} - \sigma_{sL_1} = \sigma_{L_1L_2} \cos \theta$$

The spreading of one liquid over the other can be defined by the spreading coefficient (S_c):-

$$S_c = W_a - W_c$$

where W_c = work of cohesion.

W_c is defined as the work required to produce a new surface of unit area and is:

$$W_c = 2\sigma_{L_2}$$

For spreading liquid (2), i.e. oil, on liquid (1), i.e. water:-

$$S_c = \sigma_{L_1} - \sigma_{L_2} - \sigma_{L_1L_2} \qquad \text{(see Ref. 17)} \qquad \text{(A.2)}$$

If $S_c > 0$, liquid (2) will spread on liquid (1), but if $S_c < 0$, the droplets of liquid (2) remain intact.

APPENDIX III

PROPOSALS FOR RESEARCH IN LIQUID/SOLID SEPARATION

The following proposals were prepared in July 1978.

1. Background

BHRA intends to establish an expertise in some areas within the broad field of liquid/solid separation, where a specific need exists either to improve the existing techniques or to develop new techniques.

In order to identify these areas, discussions were held between BHRA and representatives of various process industries. These discussions revealed the existence of such an area, i.e. where semi-consolidated suspensions of very fine particles are to be dewatered in disused lagoons. In response to this need a technique, based on the principle of capillary rise and evaporation is being developed at BHRA with financial support from NRDC. Preliminary studies of this technique have been completed and proposals for the design and testing of a full size device will be submitted to NRDC in the near future. This device is capable of extracting water from a semi-consolidated suspension without power input, although at a relatively low rate.

An alternative technique which may produce a much greater rate of extraction of water from a semi-consolidated suspension is thought to be electro-osmosis. This method requires some power input and it has been used in similar applications with various degrees of success. In order to assess the applicability of electro-osmosis for dewatering semi-consolidated suspensions, some exploratory tests were carried out at BHRA. In these tests a hollow porous cylinder, fitted with wire mesh electrodes along the inside and outside surfaces, was introduced into a concentrated suspension of clay in water. The bottom of the cylinder was sealed from the suspension and a small flow rate of water was maintained through the porous wall of the cylinder by the hydrostatic head of the suspension. This observation seems to indicate the applicability of electro-osmosis to dewatering of semi-consolidated suspensions.

An article by J.H. Krieger, titled 'Separation Technology Faces Crises' and published in the Chemical and Engineering News, dated 22.8.77 describes, as the title indicates, the crisis situation in the field of liquid/solid separation. The author suggests that the main reason for this situation is the shortage of knowledgeable personnel, which is the direct consequence of the absence of educational courses dealing with the subject in depth. The article identifies a range of processes where the need to improve existing techniques is particularly acute, some of which are sludge filtration, dewatering of cakes, flocculation and thickening. All these processes are controlled by particle-fluid interactions which, in turn, are governed by electro-kinetics, therefore the study of this basic field is essential in order to improve these processes. The author also suggests investigations on the use of hydrocyclones and on the basic mechanisms governing the operation of froth flotation cells.

2. Objective

To establish a new area of activity within BHRA, which, after three years is aimed to yield an annual income of about 50,000 pounds.

Suggested Investigations - Preliminary Proposals

The proposals listed below have been prepared without the benefit of a comprehensive market and literature survey, hence they are necessarily speculative at this stage.

(i) Since most of the processes used in separating fine particles from liquid are either governed or affected by particle electro-kinetics, the study of this area of particle science is clearly necessary if progress is to be achieved in the separation technology.

(ii) Electro-osmosis is considered to be a specific area of electro-kinetics, for which a possible application - with regard to dewatering of lagoons - has already been identified. It is conceivable that electro-osmosis can be applied successfully to a variety of dewatering problems, some of which are:-

(a) Dewatering rigid porous materials, e.g. mosaic tiles, removing dampness from old houses, etc.

(b) Lowering the moisture content of loose granular materials. This method may be applied in conjunction with a capillary evaporative device.

(iii) The process of filtration is governed to a large extent by electrokinetics, therefore it may be possible to identify the conditions under which blockage occurs in filters and to provide remedial action.

(iv) It is proposed to examine a novel process where hydrocyclones would be used in similar applications as froth flotation cells at present. In this process, two different types of solids would be separated according to surface properties rather than according to size and/or density. This could be achieved by injecting air in the form of small bubbles with a method similar to that employed in the BHRA re-aerating device. Air bubbles would then attach to the hydrophobic particles only and they would be discharged through the overflow, while the hydrophylic particles would be passed through the underflow.

This process, if successful, would have very wide applications.

3. Method

3.1 Stage I

The need to develop a satisfactory technique which can be used to dewater semi-consolidated suspensions in disused lagoons has been established from a preliminary market survey. This type of investigation, however, is outside the main stream of liquid/solid separation, consequently it would not provide sufficient scope to achieve the objective. For this reason, it is considered essential to conduct a comprehensive market and literature survey in order to identify additional areas where specific problems exist, which need to be rectified. The article by J.H. Krieger will serve as a useful guide to identifying these problems.

3.2 Stage II

The suggested investigations listed above will be re-examined in the light of the completed market and literature survey and definitive proposals prepared. However, in view of the importance of electro-kinetics in separation technology, it can safely be assumed that a theoretical study of this field will be carried out. At the same time, efforts will be made to obtain research contracts from industry and also from NRDC. The possibility of conducting joint research with TNO will also be considered.

This stage is expected to cover a period of about six months.

3.3 Stage III

Experimental work, relating to the research and development contracts obtained, will be carried out during this stage. It is anticipated that by this time, sufficient expertise will have been built up to obtain long term research contracts from the Chemical and Minerals Requirement Board.

This stage will cover the rest of the 3 year period of the Total Technology Course.

4. Costing

	Pounds
The cost of market and literature survey (Stage I) assuming 50% utilisation for a period of 12 weeks would amount to about	5,000
The cost of Stage II covering a period of about 26 weeks, at 40% utilisation would be about	7,300
Total	12,300

These costs would be offset by:-

Existing Requirements Board Fund	5,000
SRC Fund	2,500
Possible further work from NRDC	5,000
	12,500

It is anticipated that some research contracts will be awarded during Stage II and Stage III work will be entirely financed by research contracts.

APPENDIX IV

PATENT SPECIFICATION

British Patent Application No. 8315334

in the name of:

THE BRITISH HYDROMECHANICS RESEARCH ASSOCIATION

for an invention entitled:

SEPARATING PARTICLES FROM A LIQUID SUSPENSION

made by:

EMIL GYORGY ARATO

EDWARD EVANS & CO.,
Chartered Patent Agents and
European Patent Attorneys,
Chancery House,
53-64 Chancery Lane,
London WC2A 1SD.

Separating Particles from a Liquid Suspension

Field of the Invention

The invention relates to a method and apparatus for the separation of particles from a liquid suspension, where said particles more readily attach themselves to gas bubbles than other particles forming part of the liquid suspension.

Background Art

In conventional flotation processes for the separation of hydrophobic particles from a suspension of hydrophobic and hydrophilic particles in water or for the separation of hydrophobic liquid particles from a dispersion of such particles in water, air bubbles attach to the hydrophobic particles and thus produce composite particles with densities much lower than the densities of the original hydrophobic particles. As a result, the composite particles rise to the surface of the water, under the effect of gravity.

However, this separating effect is proportional to the difference in density between the composite particles and the remaining particles of the water suspension or dispersion and, where the density of the original hydrophobic particles is high relative to the remaining particles, the resultant differential density is not so high and the separating effect is relatively low and is reduced still further in viscous liquids which retard the upward migration of the lighter composite particles.

One known way to overcome this deficiency in separating particles from a liquid suspension is to provide apparatus including hydrocyclone comprising a circular-section first chamber, a tangential inlet to the first chamber, a first outlet extending upwardly from the centre of the first chamber, a convergent second chamber extending downwardly from the first chamber, and a second outlet extending downwardly from the second chamber. However, although the use of this form of apparatus multiplies the effect of differences in the densities of the particles, the separating effect is limited by the actual differences in the densities of the particles.

Disclosure of the Invention

It is the purpose of the present invention to modify the known apparatus so as to avoid the deficiencies of this apparatus.

This is achieved by providing means for generating gas bubbles within the liquid suspension and by providing the second outlet from the hydrocyclone in the form of a divergent draft tube.

Thus, according to the invention, there is provided apparatus, for separating particles from a liquid suspension in which said particles more readily attach themselves to gas bubbles than other particles forming part of the liquid suspension, comprising a hydrocyclone and means for generating gas bubbles within the liquid suspension, the hydrocyclone comprising a circular-section first chamber, a tangential inlet to said first chamber, a first outlet extending upwardly from the centre of the first chamber, for removal of the separated particles and gas bubbles, a convergent second chamber extending downwardly from the first chamber, and a second outlet extending downwardly from the second chamber.

The invention also provides a method of separating particles from a liquid suspension, where said particles more readily attach themselves to gas particles than other particles forming part of the liquid suspension, comprising the steps of feeding the liquid suspension into a hydrocyclone through a tangential inlet to a circular-section first chamber, generating gas bubbles within the liquid suspension, removing separated particles and gas bubbles from a first outlet extending upwardly from the centre of the first chamber, and removing the remainder of the liquid suspension through a second outlet extending downwardly from a convergent second chamber extending downwardly from the first chamber. The volumetric gas flow rate, at atmospheric pressure, is preferably less than 5% of the flow rate of the liquid dispersion.

It is understood that, by providing the second outlet in the form of a divergent draft tube and, at the same time, replacing the cylindrical vortex finder by a similar overflow arrangement, most of the kinetic energy which would otherwise constitute the outlet head losses can be converted into a pressure head. As a result, the upstream pressures, including the pressure drop across the device, will reduce and thus reduce the power required for operation by up to 20% and the maximum flow through the second outlet is increased from 20% to more than 60% of the flow of liquid suspension through the apparatus.

In one form of apparatus according to the invention, the hydrocyclone has a wall formed with at least one aperture and the gas bubble generating means comprise an insert of porous material fitted within the or each said aperture and means for feeding gas through each said insert for the formation of gas bubbles as a result of fluid shear at the interior surface of each said insert. The size of the pores in the porous material of the or each insert is preferably in the range 10 to 100μ (10 to 100 x 10^{-6} m).

In an alternative form of apparatus, the gas bubble generating means comprise a pressure vessel supplied with pressurised gas for solution within the liquid suspension, a supply line connecting the pressure vessel to the tangential inlet to the first chamber of the hydrocyclone, a control valve in the supply line, and a orifice in the supply line for reducing pressure in the liquid suspension passing through the orifice to effect the formation of gas bubbles in the liquid suspension. In operation of this form of apparatus, the liquid suspension and gas are kept within the pressure vessel until an appreciable amount of gas is dissolved in the liquid suspension and preferably until the liquid suspension is saturated with dissolved gas. The pressure within the vessel is preferably between two and three bars.

Two embodiments of apparatus according to the invention are hereinafter described, by way of example, with reference to the accompanying drawings.

Brief Description of the Drawings

Figures 1 and 2 are a plan view and sectional elevation of a first form of apparatus according to the present invention; and

Figure 3 is a schematic elevation of a second form of apparatus according to the invention.

Modes for Carrying Out the Invention

As shown in Figures 1 and 2, a hydrocyclone 3 has a first cylindrical chamber 5 with a tangentially extending inlet 6 and an upwardly extending first outlet 7 coaxial with the first chamber 5. A second frusto-conically shaped chamber 8 extends convergently downwards from the first chamber 5 and merges with a divergent draft tube 9 forming a second outlet from the hydrocyclone 3.

Elongate inserts 10 of porous material are fitted within longitudinally extending apertures formed in the wall 17 of the hydrocyclone 3 and each of these inserts 10 is surrounded by a manifold jacket 11 supplied with pressurised air through a supply line 12.

A suspension of more hydrophobic particles and more hydrophilic particles is supplied to the hydrocyclone 3 through the tangential inlet 6 and follows a spiral path around the interior of the hydrocyclone 3 and flows downwardly through the second outlet 9. This flow of suspension over the interior surfaces of the inserts 10 causes air forced through the inserts 10 from the manifolds 11 to break up into small bubbles which attach themselves preferentially to the more hydrophobic particles of the suspension which then migrate to the centre of the hydrocyclone 3 and flow out of the hydrocyclone 3 through the first outlet 7.

In the apparatus shown in Figure 3, air and a liquid suspension comprising a disperson of oil droplets in water are pressurised within a pressure vessel 13 and kept in contact until the liquid suspension is saturated with dissolved air. Control valve 15 is then opened so as to allow liquid suspension with dissolved air to flow along supply line to orifice 16 and then through tangential inlet 6 to a hydrocyclone 4 having the same general arrangement as the hydrocyclone 3 shown in Figures 1 and 2 with a first cyclindrical chamber 5, a frusto-conically shaped second chamber 8 extending convergently downward from the first chamber 5, a first outlet 7 extending upwardly from the centre of the first chamber 5 and a second outlet 9 in the form of a divergent draft tube 9 extending downwardly from the second chamber 8.

As the liquid suspension and dissolved air passes through the orifice 16, there is a reduction in pressure resulting in the generation of small air bubbles which attach themselves preferentially to the more hydrophobic particles of the liquid suspension to form relatively light composite particles which migrate to the centre of the hydrocyclone 4 and are removed through the first outlet 7 whereas the remaining particles of the liquid suspension are removed through the second outlet 9 in the form of the convergent-divergent nozzle.

Claims

1. Apparatus (1 or 2), for separating particles from a liquid suspension in which said particles more readily attach themselves to gas bubbles than other particles forming part of the liquid suspension, including a hydrocyclone (3 or 4) comprising a circular-section first chamber (5); a tangential inlet (6) to said first chamber (5); a first outlet (7) extending upwardly from the centre of the first chamber (5), for removal of the separated particles; a convergent second chamber (8) extending downwardly from the first chamber (5); and a second outlet (9) extending downwardly from the second chamber (8);

characterised in that:

means (10 to 12 or 13 to 16) are provided for generating gas bubbles within the liquid suspension.

2. Apparatus (1 or 2), according to Claim 1, in which the second outlet (9) from the hydrocyclone (3 or 4) is a divergent draft tube.

3. Apparatus (1), according to Claim 1 or Claim 2, in which the hydrocyclone (3) has a wall (17) formed with at least one aperture and the gas bubble generating means (10 to 12) comprise an insert (10) of porous material fitted within the or each said aperture and means (11 and 12) for feeding gas through each said insert (10) for the formation of gas bubbles as a result of fluid shear at the interior surface of each said insert (10).

4. Apparatus (1), according to Claim 3, in which the size of the

pores in the porous material of the or each insert (10) is in the range 10 to 100 μ (10 to 100 x 10^{-6} m).

5. Apparatus (2), according to Claim 1 or Claim 2, in which the gas bubble generating means (13 to 16) comprise a pressure vessel (13) supplied with pressurised gas for solution within the liquid suspension, a supply line (14) connecting the pressure vessel (13) to the tangential inlet (6) to the first chamber (5) of the hydrocyclone (4), a control valve (15) in the supply line (14), and an orifice (16) in the supply line (14) for reducing pressure in the liquid suspension passing through the orifice (16) to effect the formation of gas bubbles in the liquid suspension.

6. A method of separating particles from a liquid suspension in which said particles more readily attach themselves to gas particles than other particles forming part of the liquid suspension, comprising the steps of feeding the liquid suspension into a hydrocyclone (3 or 4) through a tangential inlet (6) to a circular-section first chamber (5), removing separated particles through a first outlet (7) extending upwardly from the centre of the first chamber (5), and removing the remainder of the liquid suspension through a second outlet (9) extending downwardly from a convergent second chamber (8) extending downwardly from the first chamber (5);

characterised in that:

gas bubbles are generated within the liquid suspension.

7. A method, according to Claim 6, in which the volumetric gas flow, at atmospheric pressure, is less than 5% of the flow rate of

the liquid suspension.

8. A method, according to Claim 6 or Claim 7, in which kinetic energy in the remainder of the liquid suspension removed through the second outlet (9) is converted into static pressure by passing the remainder of the liquid suspension through a divergent draft tube forming the second outlet (9).

9. A method, according to Claim 8, in which the maximum flow through the divergent draft tube (9) is more than 60% of the flow of liquid suspension through the tangential inlet (6).

10. A method, according to any one of Claims 6 to 9, in which the gas bubbles are generated by feeding gas through at least one insert (10) of porous material fitted within an aperture in the wall (17) of the hydrocyclone (3) and by fluid shear at the interior surface of each said insert (10).

11. A method, according to any one of Claims 6 to 9, in which the gas bubbles are generated by keeping the liquid suspension and pressurised gas in a pressure vessel (13) until the gas dissolves in the liquid suspension and then allowing the liquid suspension and dissolved to flow through an orifice (16) in a supply line (14) connected to the tangential inlet (6) to the first chamber (5) of the hydrocyclone (4) so as to reduce pressure in the suspension to effect the formation of gas bubbles in the liquid suspension.

12. A method, according to Claim 11, in which the liquid suspension and pressurised gas are held in the pressure vessel (13) at a pressure of two to three bars until saturation concentration of the gas in the liquid suspension is reached.

13. Apparatus, for separating particles from a liquid suspension in which said particles more readily attach themselves to gas bubbles than other particles forming part of the liquid suspension, substantially as hereinbefore described with reference to and as illustrated in the apparatus illustrated in Figures 1 and 2 and in Figure 3.

14. A method of separating particles from a liquid suspension in which said particles more readily attach themselves to gas particles than other particles forming part of the liquid suspension, substantially as hereinbefore described with reference to the accompanying drawings. .

Abstract

Separating Particles from a Liquid Suspension

A water suspension flows through a cylindrical first chamber (5) and a downwardly convergent, frusto-conical second chamber (8) of a hydrocyclone (3) from a inlet (6) directed tangentially into the first chamber (5) to a first outlet (7) extending upwardly from the centre of the first chamber (5) and to a second outlet (9) in the form of a divergent draft tube extending downwardly from the second chamber (8). Two inserts (10) of porous material are fitted within longitudinally extending apertures formed in the wall (17) of the hydrocyclone (3) and pressurised air from manifolds (11) fed from supply line (12) passes through the inserts (10) and is formed into small bubbles as a result of fluid shear at the interior surfaces of the inserts (10). These bubbles attach themselves preferentially to the more hydrophobic particles of the liquid suspension to form relatively light composite particles which migrate towards the centre of the hydrocyclone (3) and are discharged through the first outlet (7).

HYDROCYCLONE / EXTERNAL AIR INJECTION

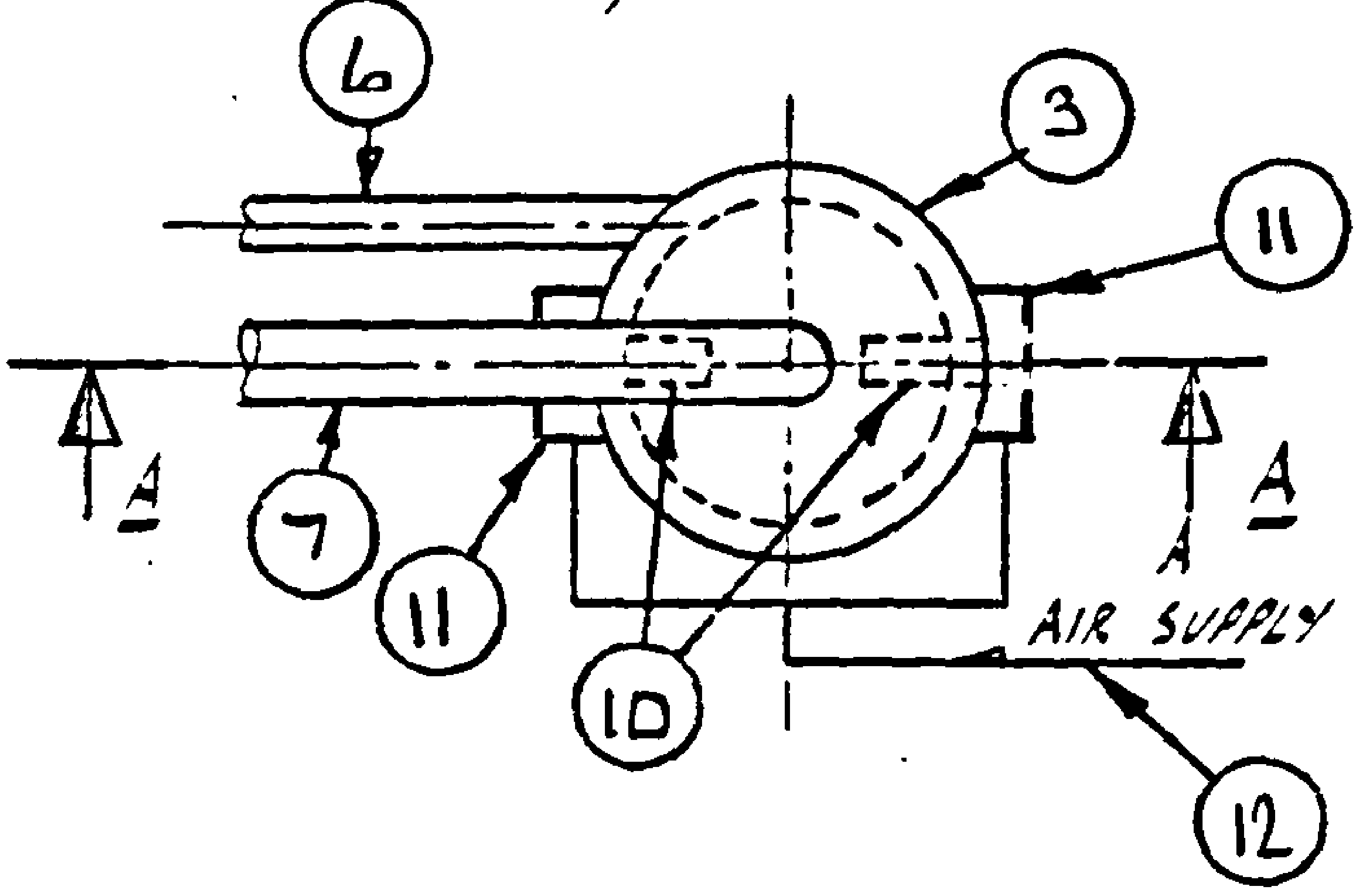

FIG 1.

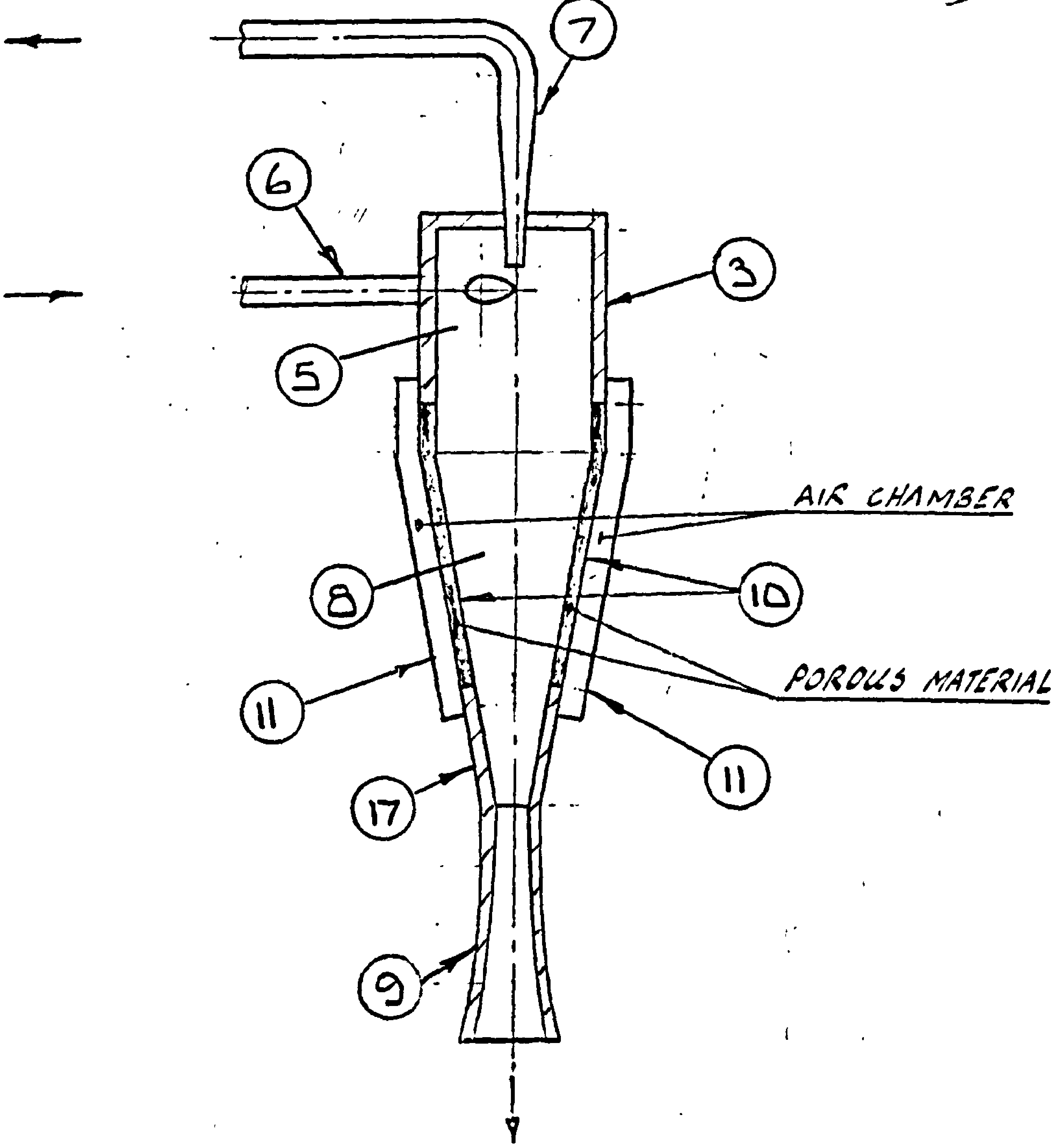

SECTION A-A

NOT TO SCALE
DATE 7 MARCH 1983

FIG 2

HYDROCYCLONE DISSOLVED AIR INJECTION

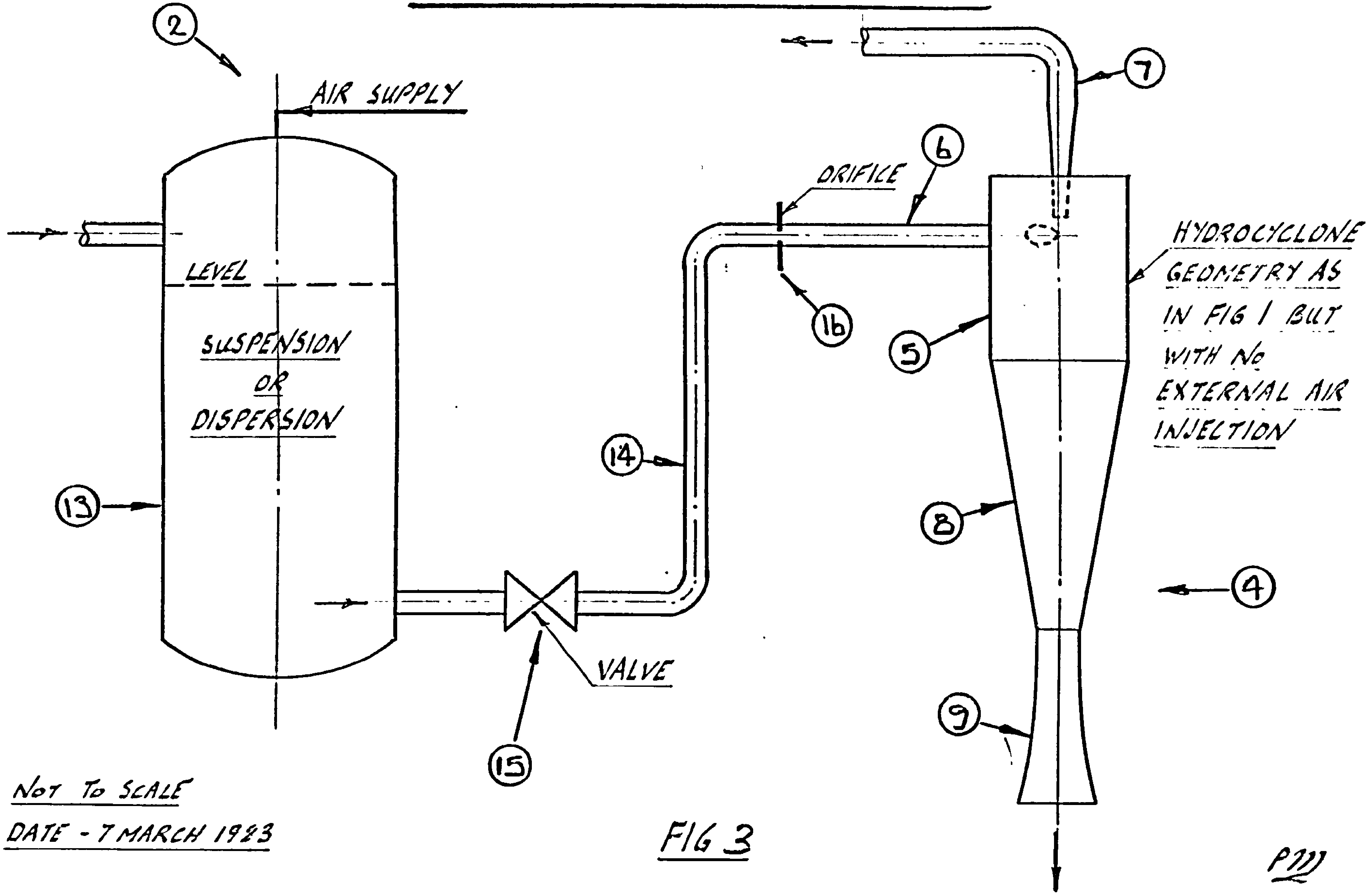

FIG 3

APPENDIX V

CONSORTIUM PROPOSAL

HYDROCYCLONE RESEARCH

1. BACKGROUND

BHRA over its thirty-five years of existence, has acquired a substantial expertise in investigating and solving technical problems related to fluid flow, in experimental techniques and in the design and construction of experimental facilities. BHRA is closely associated with the Fluid Engineering Unit of Cranfield Institute of Technology, which has several years of experience in laser-Doppler anemometry and in the associated signal processing techniques. It is intended to utilise the combined expertise of the two organisations to investigate the operation of hydrocyclones.

2. INTRODUCTION

Hydrocyclones are very widely used throughout industry, mainly for liquid/solid and solid/solid separation. In addition, special cyclones have been developed recently for the separation of two immiscible fluids (i.e. oil/water) and for de-gassing crude oils.

Although hydrocyclones are simple and inexpensive devices with no moving parts involved, operationally they are very complex and the effects of a number of geometric and operational variables on the performance of these devices are not well understood at present. The main purpose of this proposed undertaking is, therefore, to improve the understanding of the operation of these devices and, at the same time, to provide hitherto unavailable design information for hydrocyclones treating high concentration suspensions.

3. PROCEDURE

BHRA Fluid Engineering proposes to set up a consortium which would include suppliers and users of hydrocyclones and research organisations. The research programme would be overseen by a Steering Committee, composed of a member from each organisation participating in the consortium.

4. FINANCE

The project will be included in BHRA's General Research programme and will be financed jointly by the Department of Industry and the participating organisations.

Consortium members will be asked to contribute £4,000 for the studies described in this proposal, or to commit staff time and/or facilities equivalent to £4,000, valued at the company's external charge rate.

5. SCOPE OF THE PROJECT

The proposed project will include both Stage I, where the fundamental aspects of hydrocyclone operation using clear water and dilute suspensions will be investigated, and Stage II studies, where the effect of geometric and operational variables on the performance of hydrocylones treating high concentration suspensions will be evaluated. These studies will lead to better understanding of the operation of hydrocyclones and provide hitherto unavailable information for the design of hydrocyclone installations, dealing with high concentration suspensions.

6. TECHNICAL PROPOSALS - STAGE I

6.1 Main Objectives

The main objectives of Stage I studies would be as follows:-

a) to evaluate the effect of geometric changes on the velocity distribution and turbulence levels in a hydrocyclone,

b) to relate velocity distributions and turbulence levels to the performance of a hydrocyclone treating a dilute suspension.

In addition to the mean velocity field and centrifugal acceleration, fluid turbulence is thought to have a major effect on the separation in a hydrocyclone. The effect of turbulence however has not been quantified experimentally so far. The latest theory by Schubert and Neesse claims that the equilibrium state between the turbulent diffusion and centrifugal sedimentation defines the grade efficiency curve, including the cut size (d 50) in a hydrocyclone. The validity of this theory would be examined in the light of the Stage I results.

6.2 Experimental Studies

6.2.1 Hydrocyclone geometry

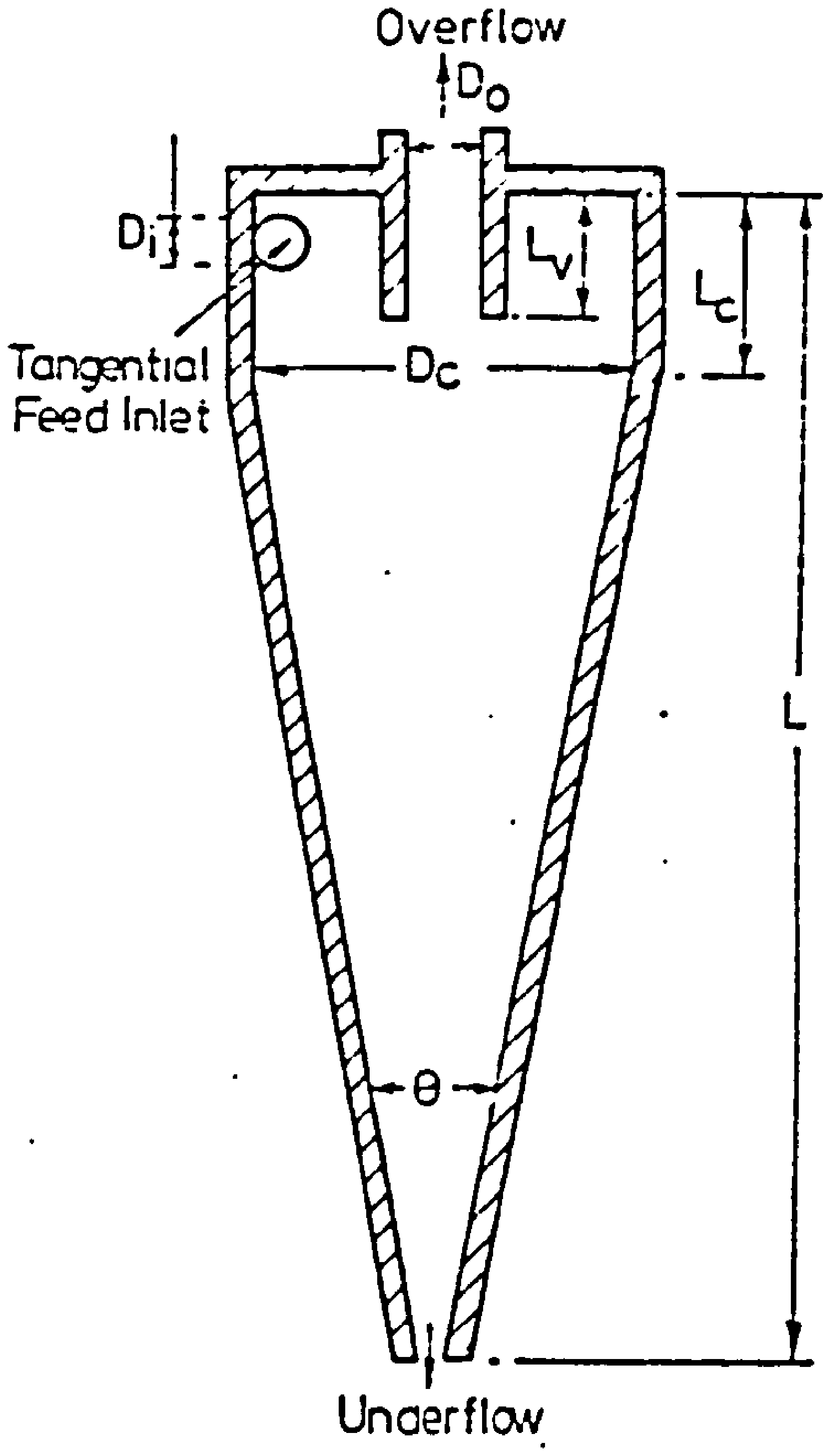

A transparent hydrocyclone, with diameter D_c = 15 cm, which is a typical practical size, will be used in the tests. The geometric parameters of the basic hydrocyclone, selected broadly in line with Dr. Trawinski's recommendations are as follows:

D_c/D_i = 4, hence D_i = 3.75 cm,

$D_c^2/(D_i x D_o)$ = 16, D_o = 3.75 cm,

$\frac{D_o}{D_u} = 1.5,$ $D_u = 2.5$ cm

$L_c = 0.75\ D_c,$ $L_c = 11.25$ cm,

$L_v = 0.5\ D_c,$ $L_v = 7.5$ cm,

and $\theta = 20°.$

A rectangular cross-section inlet with an aspect ratio of 2:1 would be used, with an area equivalent to: $\frac{D_i{}^2\pi}{4}$

Following the tests on the basic configuration specified above, the main geometric parameters will be varied so that only one dimension at a time will differ from that in the basic hydrocyclone. The modifications to the parameters will be as follows:

(1) D_o is increased from 3.75 to 5.0 cm, which gives

$$\frac{D_c{}^2}{D_i D_o} = 12$$

(2) D_u is reduced form 2.5 to 1.5 cm giving $\frac{D_o}{D_u} = 2.5$, which is considered to be the lower practical limit for avoiding blockage of the underflow.

(3) The length of the cylindrical section is increased from 11.25 to 22.5 cm, or from $\frac{L_c}{D_c} = .75$ to 1.5.

(4) D_i is reduced from 3.75 to 3.0 cm, giving $\frac{D_c}{D_i} = 5$, which is considered to be the highest value for economical design of hydrocyclones.

(5) The cone angle is reduced from 20° to 10°.

Alteration of the length of the vortex finder is not envisaged at present, although this will be reviewed in the light of the experimental results, i.e. if excessive recirculation is found.

6.2.2 Test programme

Task (i) - Clear water would be passed through the basic hydrocyclone at a predetermined inlet pressure (i.e. 1 bar) and a detailed survey of velocity distributions and turbulence levels undertaken by a laser Doppler anemometer. With this device, the three components of the velocity vector and the turbulent fluctuations would be measured at a sufficient number of positions to enable a complete picture of velocity distributions and turbulence levels inside the hydrocyclone to be built up.

Task (ii) - Each of the five configurations, obtained by altering one parameter of the basic hydrocyclone, will be examined initially by flow visualisation. Areas in the device, where the flow patterns had changed significantly as a result of modification, will be investigated by the Laser Doppler Anemometer.

Task (iii) - The separation efficiency of the basic hydrocyclone treating dilute suspensions of fine silt in water, at volumetric concentrations of 1, 3 and 5% will be evaluated. Attempts will be made to relate the efficiencies to the velocity field and turbulence levels measured in Task (i).

6.3 Exploratory Tests

It is known from the technical literature that the throughput of a hydrocyclone increases, or the operating pressure reduces at the same throughput, if measures are applied which retard the spin velocities in the device. Ignoring the effect of solids, this can be achieved either by artificially roughening the surface of the cyclone and/or by increasing the viscosity of the fluid. The amount of increase in the flow rate suggests that the larger part of the head losses across a hydrocyclone are due to exit losses, with the internal friction losses being the smaller proportion. The exit losses consist mainly of tangential velocity heads and, to a small extent, axial velocity heads, at both outlets. It is anticipated that, by incorporating specially designed draft tubes (or diffusers) at both outlets, a significant part of the outlet velocity heads could be recovered (i.e. converted to pressure heads), which would result in energy saving and/or improved separation at the same pressure drop.

In view of the relatively small amount of work involved in exploring the possibility of head recovery and the substantial benefits obtained if successful, it is proposed to evaluate the effect of specially designed draft tubes incorporated at the outlets of the basic hydrocyclone.

7. TECHNICAL PROPOSALS - STAGE II

7.1 Test Conditions

Apart form the geometric parameters discussed in section 6.2.1., the size distribution and volumetric concentration of the solids in suspension, and the inlet pressures, will be varied. It is proposed to use silt as a solid material, which is easily available in different size ranges, has a density similar to most solids treated in hydrocyclones and, due to its hardness, will not degrade during test runs involving recirculation.

A typical fine silt (i.e. -150μ) and a coarse silt (i.e. -500μ) would be used, with volumetric concentrations ranging from 10 to 30% and the inlet (i.e. operating) pressure would be varied between 1 and 3 bars.

7.2 Experimental Studies - Stage II

All required measurements for the evaluation of the grade efficiency curves will be carried out for each test. The proposed experimental work is as follows:

Task (i) - In addition to the basic hydrocyclone, five further configurations, each of which will differ from the basic device by one geometric parameter, as specified in section 6.2.1, will be tested under the following operating conditions:

(1) 10% volumetric concentration of both types of silt in water.

(2) Both suspensions at inlet pressures of 1, 2 and 3 bar respectively.
The total number of tests in Task (i) will amount to 36 and the results will allow the geometric and operational parameters to be identified, which tend to improve the efficiency of separation of some typical high concentration slurries.

Task (ii) - Following the careful examination of the results of Task (i) studies, some of the geometric parameters (i.e. more than one at a time) which have a beneficial effect in the separation will be incorporated into a new device. Since the combined effect of these parameters on the efficiency of separation cannot be predicted with certainty, it is envisaged that four different hydrocyclone configurations will be tested with each type of suspension. The concentration of the suspensions would be maintained at 10% (v/v) and the tests carried out at two different inlet pressures.

The total number of tests in Task (ii) would be 16 and the results will show the optimum hydrocyclone geometry for classification of some typical suspensions. In addition, the interaction effect of several geometric parameters with respect to the efficiency of separation could also be assessed from these tests.

Task (iii) - An optimum hydrocyclone design for each of the suspensions, as found in Task (ii) will be selected for further tests on higher concentration suspensions of the same two materials. In addition, it is envisaged that a further design for each suspension, based on both Task (i) and Task (ii) results, will also be tested. In these tests the concentration of the two types of silt will be increased to 20 and then to 30% (v/v) and each suspension tested at two different inlet pressures. The total number of tests in Task (iii) will be 16.

It is anticipated that the optimum geometric configuration of a hydrocyclone treating a typical high concentration suspension can be predicted from the results of these studies. At the same time an economical operating pressure can also be evaluated. Although the high concentration of the solids will inevitably influence the flow regime in the hydrocyclone, the possibility of relating Stage II and Stage I results will be examined.

8. TIME-SCALE

Due to practical considerations and to the need for speedy results, the Stage I and Stage II studies will be carried out on separate test facilities.

Stage I

Commissioning of test facility	5 weeks
Task (i): laser Doppler measurements	3 weeks
Task (ii): geometric variations	3 weeks
Task (iii): dilute suspensions	2 weeks
Exploratory tests	1 week
Total	14 weeks

Stage II

Commissioning test facility	8 weeks
Task (i): geometric effects	6 weeks
Task (ii): selected geometries	3 weeks
Task (iii): optimised geometries	3 weeks
Analysis of results and report	4 weeks
Total	24 weeks

The duration of the project should not exceed six months because, whenever possible, the work on the two stages will be carried out in parallel.

A summary report would be prepared after the completion of each task and submitted to the steering committee for comment, and a combined report would be prepared after completion of the project.

9. RULES FOR ENTRY IN BHRA CONSORTIA

Consortia entry is open to all industrial and governmental organisations and is subject to the following rules:

The participating organisations shall be designated as the company paying the consortium entry fee.

The results of the project will remain confidential to the participating organisations for a period of two years after publication of the report.

Property rights will be retained by BHRA.

BHRA will not be liable for any loss resulting from the application of any part of the results or content of the project.

Organisations wishing to join the consortium after project initiation will be accepted on terms no more favourable than those for the original participants. Acceptance of additional participants may result in an expansion of the scope of the project.

Wholly owned subsidiaries of a participating organisation will be entitled to the results on payment of 20% of the entry fee.

Organisations which represent groups, confederations or associations of independent companies will be accepted as participants subject to payment of a negotiable multiple of the cost of consortium entry to individual companies.

10. REFERENCES

1) Schubert, H. & Neesse, T.H. "A Hydrocyclone Separation Model in Consideration of the Turbulent Multi-phase Flow" Intl. Conf. on Hydrocyclones, Cambridge, 1980.

2) Bloor, M.I.G. & Ingham, B.D. "Turbulent Spin in a Cyclone" Trans. Inst. of Chem. Eng., Vol. 53, No. 1, Jan. 1975.

APPENDIX TO PROPOSAL

Effect of Turbulence

Fluid turbulence causes diffusion of sediment in the direction of lower concentration. An equilibrium condition exists when the rate of sedimentation is equal to the rate of turbulent diffusion and can be described by the following equation:

$$wc = -\varepsilon \frac{\partial c}{\partial y} \tag{1}$$

where w = terminal settling velocity of particles
c = concentration at y
y = distance from boundary
ε = turbulent diffusion coefficient

According to Schubert and Neesse (Ref. 1), equilibrium conditions prevail in a hydrocyclone, consequently the entire grade efficiency curve, including the cut size, can be determined with the aid of equation (1), provided ε is known.

The value of ε is equivalent to the kinematic eddy viscosity of turbulent flows, which for a parallel flow can be expressed as:

$$\varepsilon = \ell^2 \left|\frac{d\overline{V}}{dy}\right|$$

where ℓ = Prandtl's mixing length
$\overline{V}$ = mean velocity in x direction
y = distance

$\frac{d\overline{V}}{dy}$ is also referred to as the rate of strain, which for flows in a hydrocyclone becomes:

$$\frac{\partial V}{\partial R} - \frac{V}{R} \quad \text{(see Ref. 2)}$$

The value of "ℓ" in parallel flows has been shown to be a linear function of a characteristic length, however, no similar information is available for "ℓ" which could be justifiably used for flows in a strong centrifugal field.

With the aid of velocity and turbulence measurements, ε and ℓ can be evaluated from the following relationships:

$$T_t = -\rho \overline{V_t'V_r'} = \rho\varepsilon \left| \frac{\partial V_t}{\partial R} - \frac{V_t}{R} \right| \qquad (2)$$

and $$\varepsilon = \ell^2 \left| \frac{\partial V_t}{\partial R} - \frac{V_t}{R} \right| \qquad (3)$$

where T_t = turbulent shear stress

V_t' and V_r' = fluctuating velocity components in tangential and radial directions respectively

$\overline{V_t'V_r'}$ = mean product

R = radial distance

APPENDIX VI

Reducing head or pressure losses across a hydrocyclone

E.G. Arato, BSc, MSc, Principal Engineer, BHRA, the Fluid Engineering Centre
(Paper submitted to Filtration and Separation)

Published results on hydrocyclones indicate that for a typical hydrocyclone the outlet losses will generally amount to more than 50% of the total head requirement. Since the majority of these losses are, in principle, recoverable, substantial savings in energy costs or increased throughput could be achieved by the use of a simple but effective head recovery arrangement.

With this objective in mind, BHRA designed and tested two different outlet configurations for a conventional hydrocyclone. The experimental results revealed a 27% reduction in the total head loss across the cyclone as a result of using either of the two outlet configurations proposed.

In theory, the total head loss across a hydrocyclone can be expressed as the sum of the internal and outlet losses,

ie., $\Delta H = h_f + h_e$

The internal losses (h_f) at a given flow rate are determined by the boundary roughness, geometry and the viscosity of the fluid (ignoring solids content) and cannot be altered for any device performing a specific duty. However, outlet losses (h_e), which are associated with the kinetic or velocity head of the fluid at exit, can, in principle, be reduced by converting some of the kinetic head into pressure head. Any pressure recovery would enable power requirements at the original flow rate to be reduced, or a higher throughput combined with more efficient separation could be achieved at the original power requirement. Measures aimed at pressure recovery would only be justifiable commercially if the outlet losses, which are partly recoverable, constitute a substantial part of the total head losses across a cyclone. Therefore, prior to experimental work, the magnitude of outlet losses in a typical hydrocyclone were estimated, with the aid of some well-known operational features and previously reported experimental results.

Estimating outlet losses for a typical hydrocyclone

Any measure which retards the tangential velocities in a hydrocyclone will result in an increased flow rate or in a reduced head loss at the original flow rate. For instance, an increase in the surface roughness of the interior of a cyclone would provide a small but noticeable increase in the flow rate. However, a substantial increase in fluid viscosity has a dramatic effect on the capacity of a hydrocyclone. At a constant upstream pressure, the flow rate through a conical cyclone would increase by as much as 35% according to Fontein et al as a result of a 25-fold increase in the fluid viscosity (ie. from 1 to 25 cp) (ref. 1). This increased flow rate and viscosity will inevitably result in increased internal losses and a proportionate reduction in the outlet losses whe compared with the same hydrocyclone operating with a low viscosity fluid. This redistribution of the head losses could only occur if the tangential component of the velocity heads, which constitutes the bulk of the outlet losses, has been virtually eliminated by the effect of fluid viscosity. Under these conditions the cyclone could no longer be considered as an effective centrifugal separator.

The outlet losses in a hydrocyclone can be generally expressed as the algebraic sum of the axial and tangential velocity heads,

ie.,

$$h_e = \frac{U^2}{2g} + \frac{V^2}{2g} \qquad (1)$$

If we consider a cyclone (1) operating with water and an identical cyclone (2) with a viscous fluid, then for the same total head loss (or upstream pressure) in the two cyclones we have;

$$h_{f_1} + \frac{U_1^2}{2g} + \frac{V_1^2}{2g} = h_{f_2} + \frac{U_2^2}{2g} + \frac{V_2^2}{2g}. \qquad (2)$$

By accepting the result given by (Ref. 1) that the flow rate through (2) will be $Q_2 = 1.35Q_1$ then,

$$\frac{U_2^2}{2g} = 1.35^2 \frac{U_1^2}{2g} \tag{3}$$

In addition, since the flow rate could not be increased any further by raising fluid viscosity beyond 25 cp (Ref. 1), it is reasonable to assume that the tangential component of the outlet velocity in (2) has become negligible, hence

$$\frac{V_2^2}{2g} \cong 0 \tag{4}$$

The internal losses in a cyclone under turbulent flow conditions are proportional to the square of the inlet velocity, consequently,

$$h_{f_1} = \alpha V_{1x}^2$$

and

$$h_{f_2} = \beta V_{2x}^2 = 1.35^2 \beta V_{1x}^2 \tag{5}$$

Due to viscous effects, $\beta > \alpha$ but, for simplicity, let us assume that $\beta = \alpha$ which will lead to an underestimate of the outlet losses. By substituting equations (3), (4) and (5) into equation (2) the tangential component of the outlet losses will be:

$$\frac{V_1^2}{2g} = \left(1.35^2 - 1\right)\left(h_{f_1} + \frac{U_1^2}{2g}\right)$$

and

$$\frac{V_2^2}{2g} \Big/ \Delta H = \frac{1.35^2 - 1}{1.35^2} = 0.45$$

In addition, the outlet losses also include a significant but much smaller axial velocity head loss. Consequently, the outlet losses, which are partially recoverable, should generally amount to more than 50% of the total head. It is anticipated that by using relatively inexpensive methods, 60% of the outlet losses, amounting to about 30% of the total head, could be recovered.

Methods of head recovery

For purely axial flows in pipelines, straight wall conical diffusers are used for recovering part of the kinetic head and these are generally placed near the outlet of the pipeline. However, in hydroelectric practice, where both axial and tangential velocity components are present downstream of the turbine, curved wall conical diffusers or draft tubes are preferred. The shape of these diffusers is designed to ensure that no flow separation takes place as a result of diffusion, and the curved wall is generally defined by a hyperbolic relationship, that is,

$$r_d^2 Z = \text{a constant, or } r_d Z = \text{a constant.}$$

Although curved wall diffusers are not claimed to be effective in recovering tangential velocity heads, nevertheless, owing to their very gradual initial expansion, they can be more effective than the equivalent straight wall diffusers. Theoretically, a volute-shaped outlet configuration designed for constant velocity should provide the highest recovery, but it would be substantially more expensive to install than a simple draft tube/bend combination.

Experimental studies

A 15 cm diameter conventional hydrocyclone, see Fig. 1 for geometric details, was tested with the following outlet configurations:

(a) the overflow arrangement consisted of an outlet pipe of the same size as the vortex finder followed by an r/d = 2 bend and a 4-diameter long pipe. The under-flow outlet included a short (ie. 5-diameter long) pipe attached to the apex as shown in Fig.2;

(b) the vortex finder and the overflow pipe were replaced by a curved wall diffuser of 2:1 diameter ratio followed by an r/d = 2 bend and 4-diameter long outlet pipe. The short underflow pipe was replaced by a curved diffuser (see Fig. 3); and

(c) a volute shape configuration was attached to the curved diffuser at the overflow while the underflow outlet was retained as in (b), as can be seen in Fig.4.

The experiments to evaluate the head losses and the head recoveries achieved by outlet arrangements (b) and (c) were carried out using air as the fluid instead of water. The results obtained are entirely representative of all gas and hydrocylones which are similar in geometry and Reynolds number to the device tested, provided the outlets of the hydrocylone are submerged, thus preventing the formation of an air core. In practice, however, the similarity requirements for Reynolds numbers could be relaxed without incurring significant deviations in the results. For instance, above reasonably high Reynolds numbers (ie. 5000), the loss coefficients would be substantially independent of Reynolds number.

The loss coefficient of the cyclone was defined in terms of the inlet velocity head, ie.,

$$K = \frac{\Delta H}{V_{1x}^2/2g} = \frac{\Delta h + V_{1x}^2/2g}{V_{1x}^2/2g} = \frac{\Delta p + \frac{1}{2}\rho V_{1x}^2}{\frac{1}{2}\rho V_{1x}^2}$$

From appropriate pressure and flow rate measurements, the loss coefficients of the cyclone for the three different inlet configurations were evaluated and the results plotted against the inlet Reynolds numbers, as shown in Fig.5. The values obtained show a consistent 27% reduction in the loss coefficient (or upstream pressure) as a result of incorporating either (b) or (c) outlet configurations into the cyclone.

Discussion and comments

Since all efficient gas and hydrocyclones are characterised by high tangential exit velocities, a substantial saving in energy costs would be achieved by converting part of the exit velocity head into pressure head. For instance, a

27% reduction in the loss coefficient would represent either a similar reduction in power requirement at the same flow rate or an approximately 11% increase in the throughput at the same power.

It is surprising that the head recovery achieved by the simple curved wall diffuser (or draft tube) was as substantial as with the more complex volute shaped configuration. It should be noted however, that both configurations represented the first attempt in design, and further significant reductions in loss coefficients are likely to be achieved by systematic investigations.

The applicability of these results to hydrocyclones with free outlets, where an air core is allowed to form along the centre, is not known at present. It is likely that some deviations in head recovery from the measured value would occur as a result of two-phase flow.

Conclusion

The experimental results clearly showed that substantial head recoveries, resulting either in savings in energy cost or increased throughputs, could be achieved by the use of some special outlet configurations with both gas and hydrocyclones. It is anticipated that further investigations on head recovery on hydrocyclones will be undertaken by BHRA as part of a broad research programme on hydrocyclones.

Reference

1. Fontein, F.J. van Kooy, J.G. and Leniger, H.A.	"The influence of some variables upon hydrocyclone performance" British Chemical Engineering June, 1982 Vol. 7. No.6.

Table 1: SYMBOLS USED

ΔH	Total head upstream of the cyclone
Δh	Upstream head
h_f	Internal losses
h_e	Outlet losses
u	Axial velocity
V	Tangential velocity
V_x	Inlet velocity
g	Gravitational acceleration
r_d	Sectional radius of curved wall diffuser
z	Sectional elevation of curved wall diffuser
r	Radius of bend
d	Pipe diameter
K	Loss coefficient
Δp	Upstream pressure
α and β	Proportionality constants
ρ	Density of Fluid

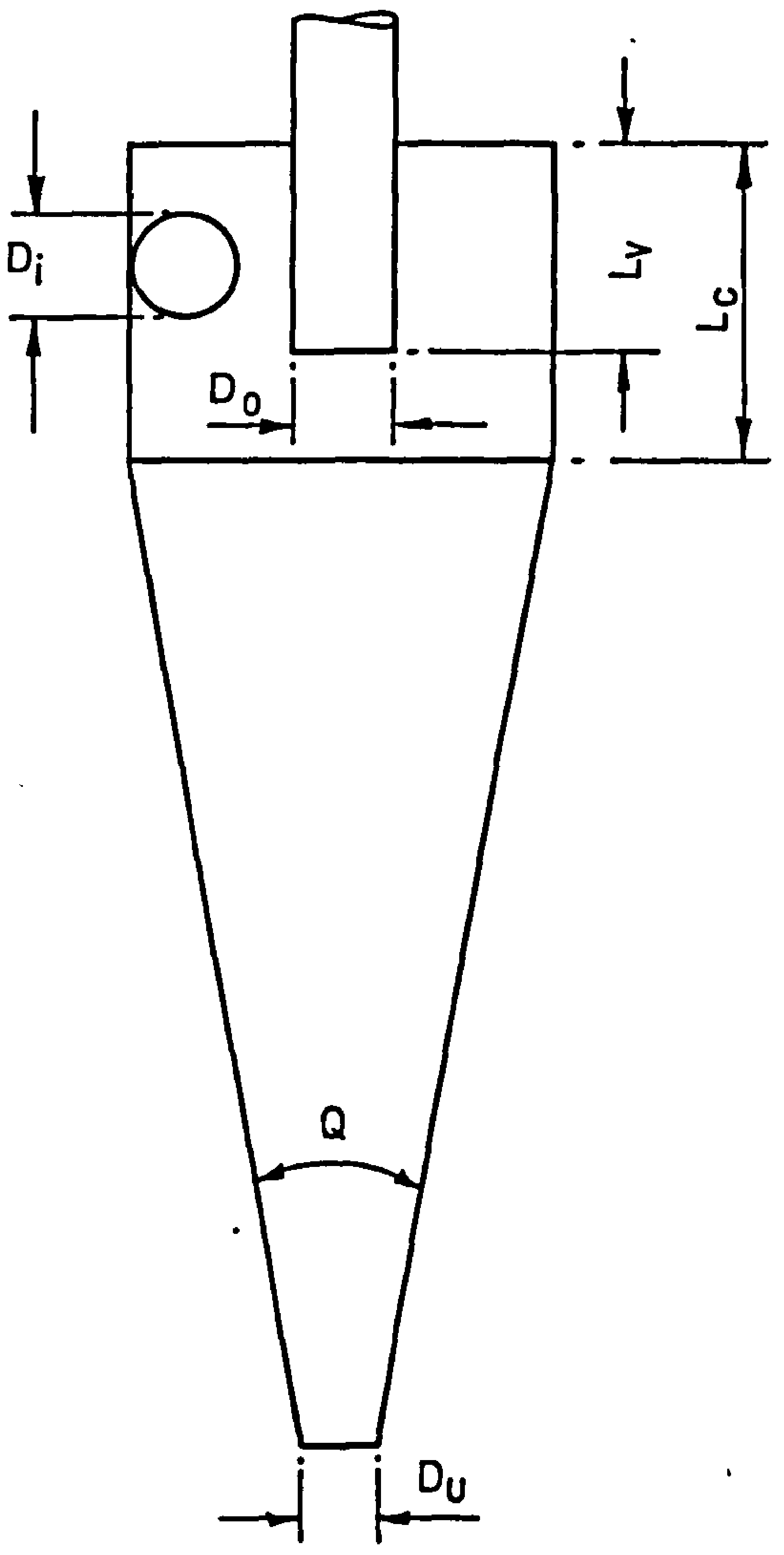

D_i = 3·75 Cm

D_o = 3·75 Cm

D_u = 2·5 Cm

L_v = 7·5 Cm

L_c = 11·25 Cm

Q = 20°

FIG. 1 CYCLONE GEOMETRY

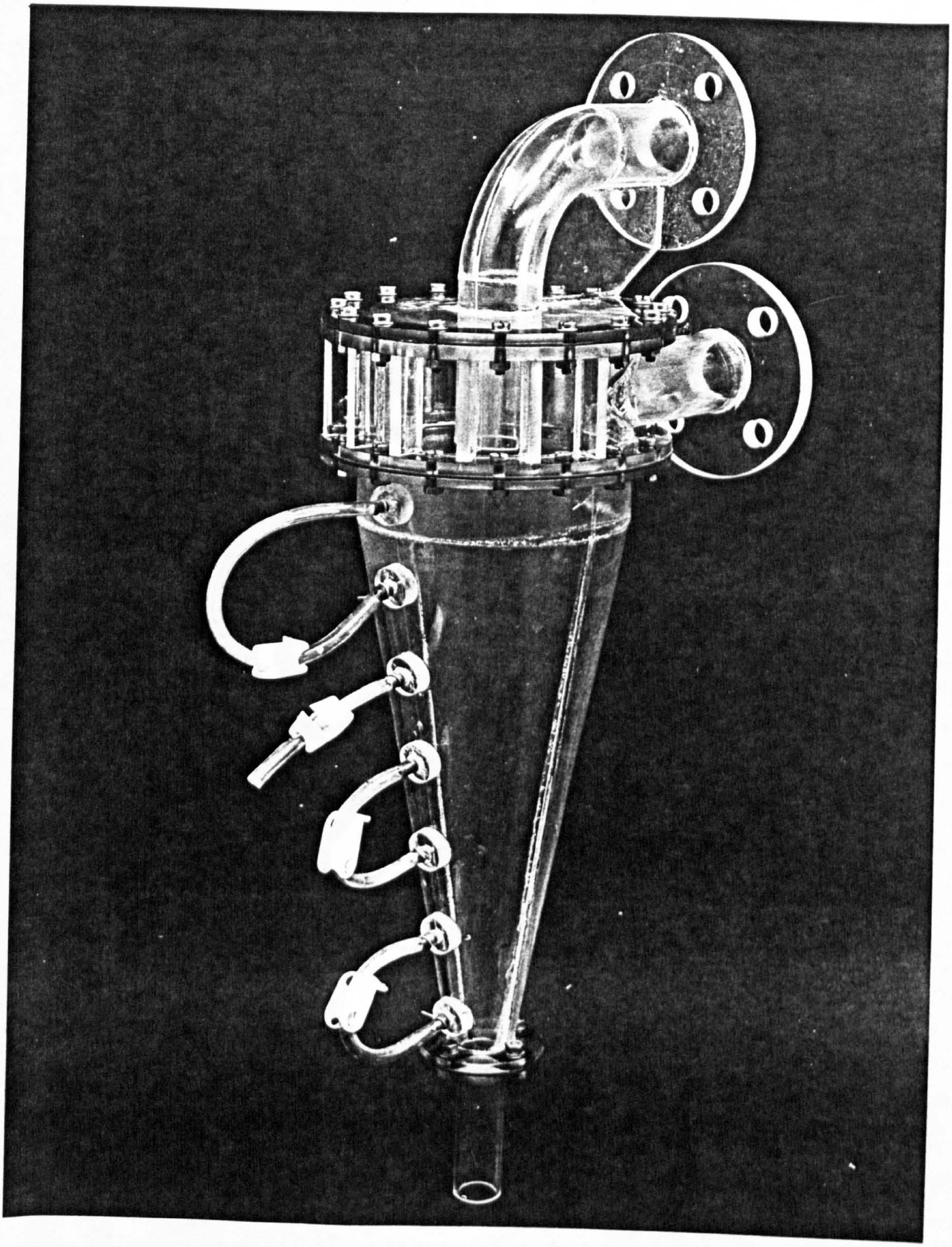

FIG. 2 BASIC OUTLET ARRANGEMENT

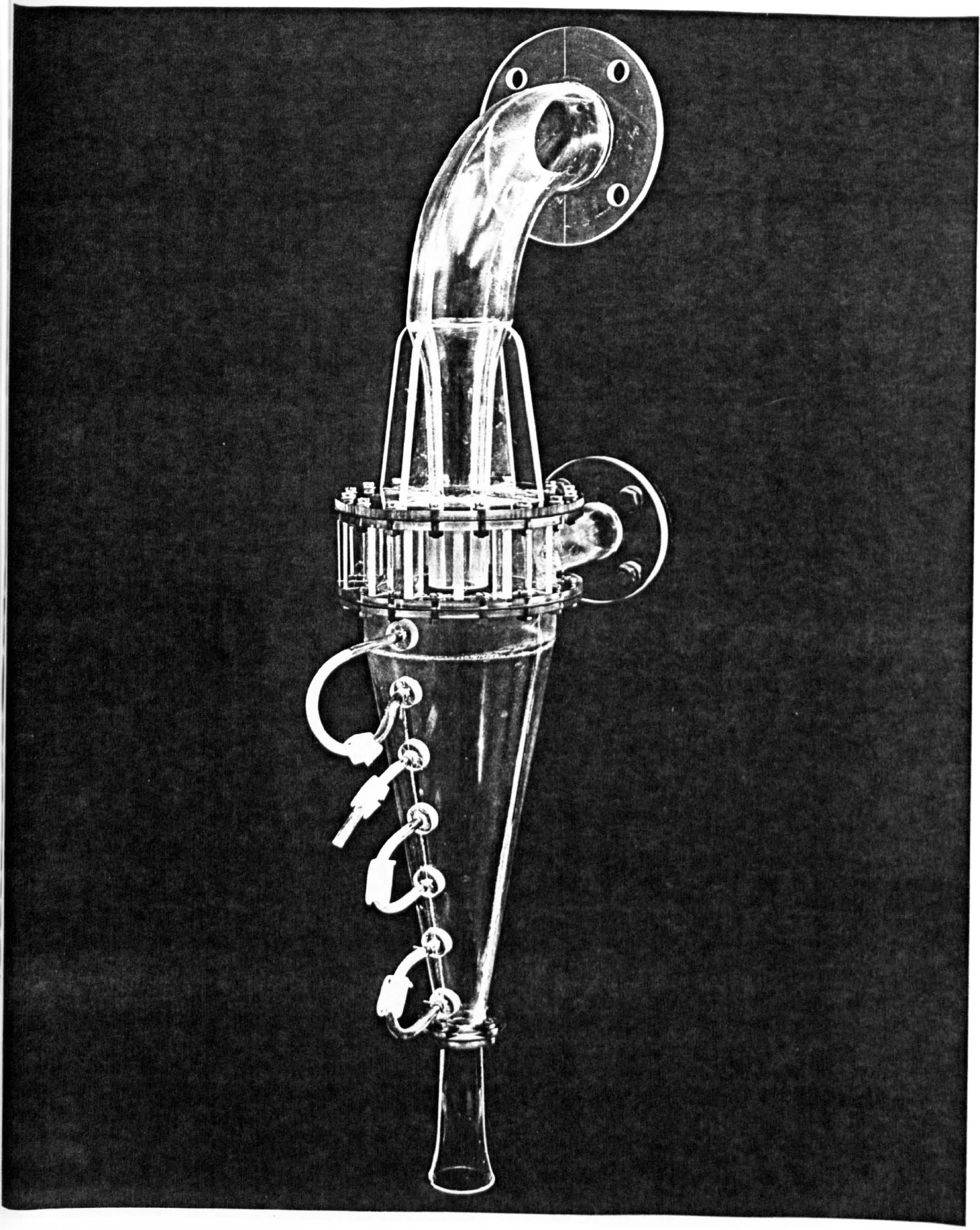

FIG. 3 CURVED WALL DIFFUSER OUTLETS

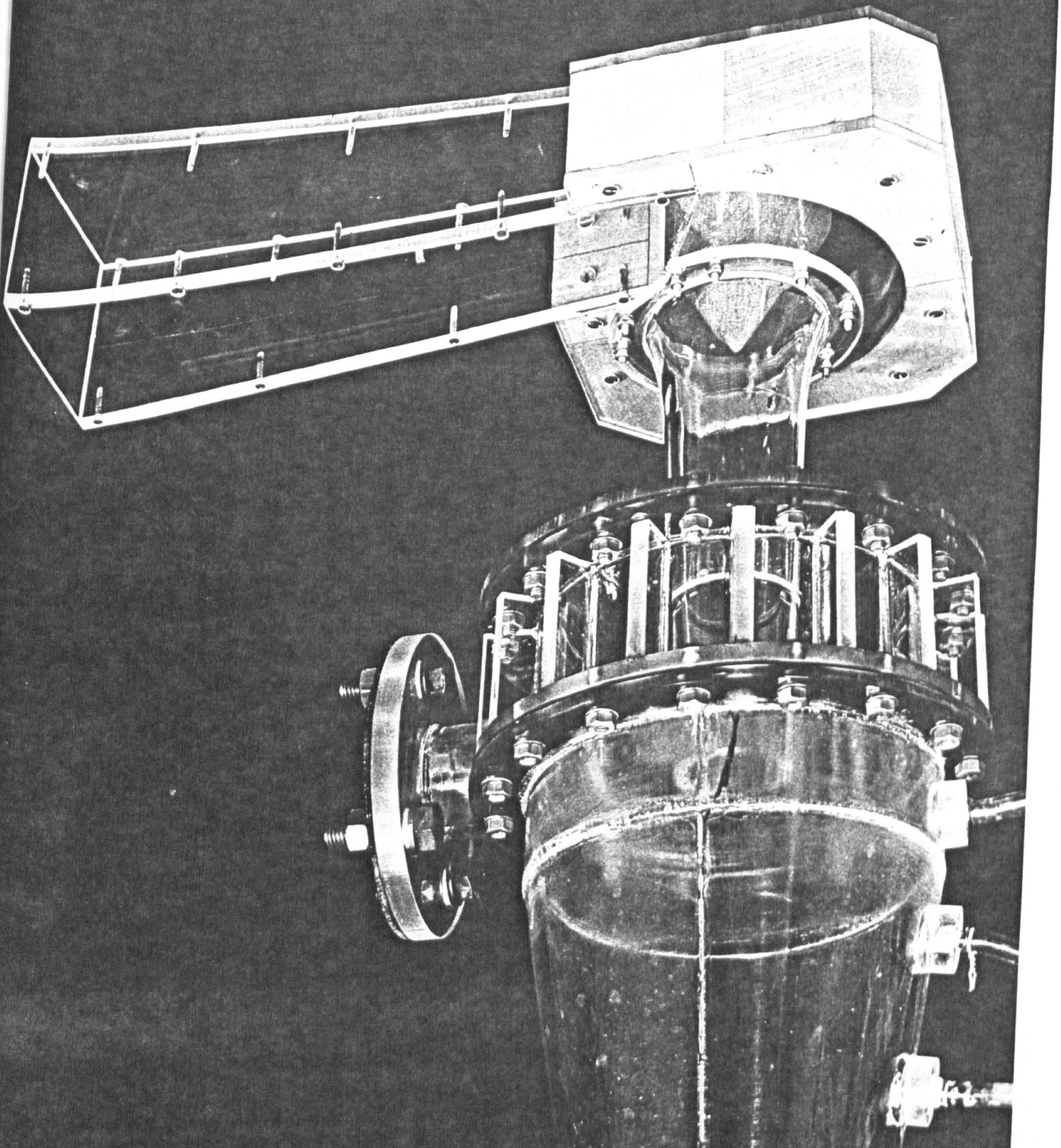

FIG. 4 VOLUTE SHAPED OUTLET

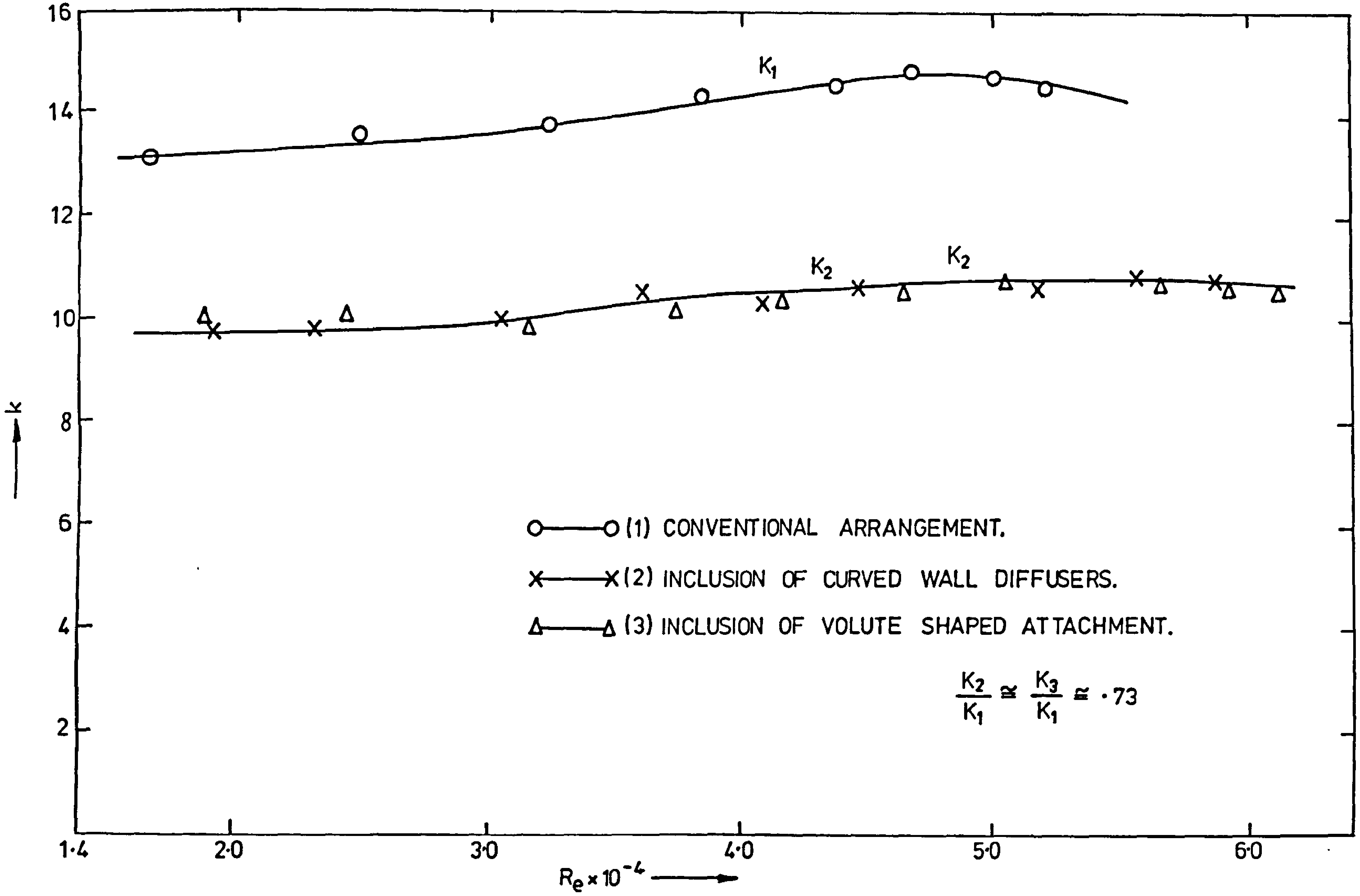

FIG. 5 LOSS COEFFICIENT