CORE
Metadata, citation and similar papers at core.ac.uk
Provided by Online Research Database In Technology

Technical University of Denmark

Reproducibility of surface roughness in reaming

Müller, Pavel; De Chiffre, Leonardo

Published in:
Proceedings of the 4. Swedish Production Symposium

Publication date:
2011

Link back to DTU Orbit

Citation (APA):
Müller, P., & De Chiffre, L. (2011). Reproducibility of surface roughness in reaming. In Proceedings of the 4. Swedish Production Symposium

DTU Library
Technical Information Center of Denmark

General rights
Copyright and moral rights for the publications made accessible in the public portal are retained by the authors and/or other copyright owners and it is a condition of accessing publications that users recognise and abide by the legal requirements associated with these rights.

- Users may download and print one copy of any publication from the public portal for the purpose of private study or research.
- You may not further distribute the material or use it for any profit-making activity or commercial gain
- You may freely distribute the URL identifying the publication in the public portal

If you believe that this document breaches copyright please contact us providing details, and we will remove access to the work immediately and investigate your claim.

Reproducibility of surface roughness in reaming

P. Müller, L. De Chiffre
Technical University of Denmark,
Department of Mechanical Engineering, Kgs. Lyngby, Denmark
pavm@mek.dtu.dk

ABSTRACT

An investigation on the reproducibility of surface roughness in reaming is performed to document the applicability of this approach for testing cutting fluids. Austenitic stainless steel was used as a workpiece material and high speed steel reamers as cutting tools. Reproducibility of the results is evaluated with respect to different operators, workpieces and measured position in the reamed hole for different combinations of lubrication condition and cutting speed. The measurands were the conventional surface roughness parameter, Ra and the ability of a cutting fluid to ensure a surface which is a replication of tool geometry and path. Surface profiles were examined under the 3D optical microscope. Measuring uncertainty evaluation following GUM was applied.

It could be seen from the profiles that surfaces produced with a low cutting speed were generally reproducible when considering different operators, workpieces and measured position in the hole, unlike the surfaces produced with high cutting speed. This latter contained uneven, random surface profiles and varied considerably for different operators. However, it could be observed that a higher concentration of the oil in water-based cutting fluid (or when using a straight mineral oil) results in surface profiles that are more reproducible at higher cutting speed. Moreover, it could be seen that three cutting fluids (two water-based cutting fluids with different oil concentration and a straight mineral oil) used in connection with a low cutting speed result in “identical” surface profiles.

It was shown that the biggest uncertainty contributors were due to the process repeatability and repeatability around the hole circumference. This was however only in the case of high cutting speeds and low degree of oil concentration. High reproducibility of different operators, especially when low cutting speed was applied, was achieved. From the surface profiles, an identification of individual feed marks from the tool was possible.

Keywords: Reaming test, surface roughness, measuring uncertainty.

1. INTRODUCTION

The general purpose of this work was to investigate surface roughness reproducibility in reaming.

Reaming is a machining process widely used in industry. Reaming tests belong to processes which are used as laboratory tests for cutting fluids efficiency evaluation [1-4]. Among the most considerable performance criteria in reaming belong reaming torque, reaming thrust, hole diameter oversize, hole geometry and surface roughness.

There are many independent influence parameters in reaming processes, such as machine, cutting tool, workpiece, cutting conditions, cutting fluid and parameters connected to the operator, his experience in performing cutting, choosing the correct measuring strategy and final data processing and evaluation. Therefore, a complete control over these influence quantities is necessary. One possibility of doing so is to calculate the dispersion of data or variability of data or calculate the uncertainty. This results in detailed description of all influence contributors and their impact on the overall uncertainty.

In reaming operation where a cutting tool with *n* edges is used, the surface is generated as a spiral having *n* leads. Depending on the lubrication conditions, reamed surfaces are typically furrowed or more random [1]. One of the main aims of this work is to investigate the ability of a cutting fluid to ensure a surface which is a replication of the reamer geometry and of the spiral path determined by the feed. Fig. 1 shows a theoretical form of a surface generated by a reamer with six flutes used at a feed of six times the furrow width, *w*, per revolution. The profile produced by this tool is determined by the angle of entry of 45° and the relief angle, which is of the order of 1:100.

The general aim of this work is to investigate reproducibility of surface roughness in reaming. Specific aims are:

- Analyze the surface profiles from different operators, workpieces, measured positions on the workpieces, cutting speeds and cutting fluids;
- Quantify tool replication in reaming as a more precise way of addressing the effect of lubrication on surface roughness.

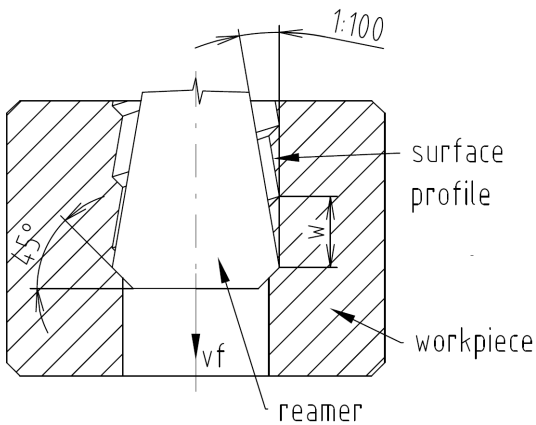

Fig. 1: A theoretical surface profile as a replication of reamer geometry (exaggerated).

2. CUTTING SETUP

2.1. Machine tool and tooling

All tests were carried out on a 3.7 kW Modig radial drilling machine. A high speed steel (HSS-E) 6-flute left hand helix machine reamer with Ø10.2mm was used for the tests. Reamer specifications are listed in Table 1. Reamer was clamped in a floating holder SK30 x MK3 Gewefa. Run-out less than 5µm was measured.

Chucking reamer DIN 212 - F1352 TITEX	
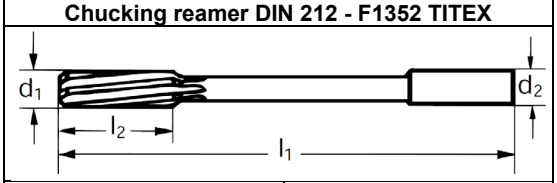	
Material	HSS-E (COBALT)
Shank	cylindrical, DIN 212
No. of flutes	6
Helix angle, γ	7° left hand
Chamfer angle, κ	45°
Dimensions [mm]	
l_1	133
l_2	38
d_1	10.2
d_2	10.0h9
Tolerance	for H7 fit

Table 1: Reamer specifications.

2.2 Workpiece and cutting fluid

Specimens were austenitic steel AISI 316L, which is low-carbon grade, non-magnetic stainless steel. An investigation using the same specimens (material and dimensions) was performed in [4], to document a process capability using metrological approach.

Such material is hard to machine due to its ductility, high strain hardening and low thermal conductivity. Chips produced are long wiry chips, and the material can easily work harden if not machined with correct feeds. The test workpieces were rings of dimensions Ø29x15mm with pre-manufactured holes Ø9.9mm by drilling and grinding. The dimensions form and surface roughness specifications of workpieces were previously investigated in [5]. Workpieces were clamped in a holder so that the workpieces were fully immersed in the cutting fluid (see Fig. 2). Tool holder and workpiece were aligned using a lever-type dial gauge.

Fig. 2: Clamping of the workpiece and application of lubrication.

Cutting fluids (CF) employed in this test are summarized in Table 2.

Code	Description	Oil concentration [%]
W1	Amine-free Water-based cooling lubricant (Rhenus)	1
W2	Amine-free Water-based cooling lubricant (Rhenus)	10
M	Mineral straight oil	100

Table 2: Cutting fluids.

The concentration of the oil in water was measured by refractometer.

3. MEASURING PROCEDURE

3.1 Surface roughness measurements using conventional portable instrument

The surface topography of the reamed holes was characterized in terms of conventional surface roughness parameter Ra, defined in ISO 4287 [6]. As discussed in [1], the Ra parameter is not appropriate to compare different machined surfaces; however, in the present investigation, where the focus is on process repeatability and tool replication, Ra was considered to be a convenient parameter. Measurements were carried out using a stylus roughness tester, Surtronic 4+ (Fig. 3a), equipped with a skid pick-up and a 2µm radius tip (Fig. 3b) according to ISO 3274:1975 [7]. The instrument was first calibrated using an optical flat, to determine the background noise and an ISO 5436 type C roughness standard, to determine the repeatability of the measurement. The expanded uncertainty of the instrument was calculated using the following formula:

$$U_{inst} = k \times u_{inst} \quad (1)$$

Where:

- k is a coverage factor (k=2 for a coverage probability of 95%);
- u_{inst} is standard uncertainty of the instrument.

Further, u_{inst} is expressed as follows:

$$u_{inst} = \sqrt{u_n^2 + u_r^2 + u_b^2} \quad (2)$$

Where:

- u_n is uncertainty of the roughness calibration standard, $u_n = U_n/2$, where U_n is from calibration certificate;
- u_r is repeatability of the instrument, n is number of measurements in the same track with the standard deviation STD_r; $u_r = STD_r/\sqrt{n}$;
- u_b is uncertainty caused by the background noise, Ra0 is the measured background noise (average Ra measured on the optical flat); $u_b = Ra0/(2\sqrt{3})$, assuming rectangular distribution.

As this instrument was further used for the purposes of the present investigation, the resulting uncertainty is increased with the roughness variation on the measured workpiece, when taking into account different locations on the workpiece, different workpieces from one batch and different operators. The resulting formula for uncertainty calculation following GUM [8] is expressed as follows:

$$U_{TOT} = k \times u_{test} \quad (3)$$

Where u_{test} is calculated following the formula below:

$$u_{test} = \sqrt{u_{inst}^2 + u_s^2} \quad (4)$$

Where:

- u_s is uncertainty caused by variations in the roughness of the specimen in different locations, considering different workpieces from the same batch and different operators; $u_s = STD_s/\sqrt{n}$, where n is the number of measurements carried out on all the specimens for one condition with standard deviation STD_s.

The workpieces were cleaned from chips before the measurement using an alcohol. Measuring profiles were recorded on the reamed specimens at four different positions, equally distributed around the hole circumference, at a distance 5.5mm from the top surface, see Fig. 4. An evaluation length ln = 4mm, low-pass λs = 0μm and high-pass λc = 0.8mm profile filtering, according to ISO 3274:1996 [8], were applied. According to this ISO standard, λs should be set to 2.5μm, but since the tip radius of the stylus is 2μm, λs was set to zero, since this has a minimum effect on the measurement result.

3.2 Surface topography under microscope

Specimens reamed under different cutting conditions were examined for surface topography under a 3D optical microscope, InfiniteFocus, Alicona (see Fig. 5). The surface topography was measured with a 50x magnification. The surface of reamed holes was measured at three different positions in the middle of the workpiece, after it was cut in half to make the measurement possible. The area measured was 290 x 218μm.

a) b)

Fig. 3: Surface roughness instrument, a) Surtronic 4+, Taylor Hobson, b) Skid pick-up and 2μm radius tip.

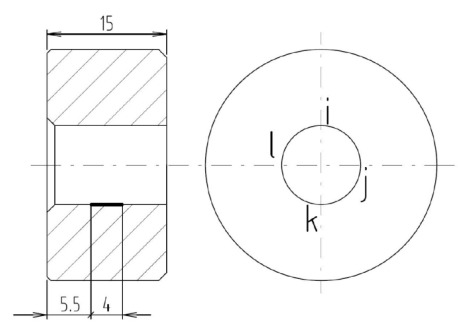

Fig. 4: Surface roughness measuring strategy.

Fig. 5: InfiniteFocus, Alicona, 3D optical microscope.

4. TEST PLAN AND CUTTING CONDITIONS

Three specimens for combination of cutting speed/lubrication were reamed. This strategy was applied by five different operators (see test plan in Table 3) using the same reamer. This results in a total of 90 specimens (i.e. 5 operators, 3 cutting fluids, 2 rotational speeds and 3 specimens). Cutting conditions are presented in Table 4).

It can be seen from Table 3 and Table 4 that the variables employed during the test were:

- Operators (A, B, C, D, E);
- Number of specimens for individual tests (WP1, WP2, WP3);
- Cutting fluids (see description of CFs in Table 2);
- Cutting speeds (low: 4.5m/min and high: 10.2m/min).

CF	Operator				
	A	B	C	D	E
W1	x	x	x	x	x
W2	x	x	x	x	x
M	x	x	x	x	x

Table 3: Test plan.

Variable	Value	Unit
Reamer diameter, d_1	10.2	mm
Feed, f	0.3	mm/rev
Number of flutes	6	-
Feed per tooth (chip load), CL	0.05	mm
Rotational speed, N_1	140	rpm
Cutting speed (low), P	4.5	m/min
Rotational speed, N_2	320	rpm
Cutting speed (high), R	10.2	m/min
Depth of cut, a_p	0.15	mm

Table 4: Cutting conditions.

Before the tests, the actual rotational speeds and feeds from Table 4 were measured. The rotational speed of the spindle was measured by a tachometer. The spindle displacement was measured over time on the NC console which is a part of a drilling press. It was found that the actual rotational speeds were 147rpm and 326rpm and the actual feeds were 0.279mm/rev and 0.148mm/rev. This also changes the actual cutting speeds by 5 and 2% for low and high speeds, respectively and reduces the pre-set feeds by 7 and 26%, respectively.

5. RESULTS AND DISCUSSION

5.1 Ra values

Results shown in Fig. 6 highlight clear idea about the influence of different cutting conditions on surface roughness parameter Ra. Individual columns in the graph represent average values coming from different operators, reaming process (including different workpieces) and measuring repeatability in the reamed hole. Error bars represent expanded uncertainty U_{TOT}, explained earlier in section 3.1. The nomenclature of individual symbols in the graph is following: The first letter stands for low, P (4.5m/min) and high, R (10.2m/min) cutting speed, respectively and the second letter corresponds to a cutting fluid (see Table 2 for details). It should also be noted, that the outliers and systematic errors were not eliminated.

Low surface roughness values are due to specimens that were machined with low cutting speed (4.5m/min), no matter what cutting fluid was used. Low uncertainties results from good reproducibility of the whole process, including both machining and measurements. Roughness of the specimens machined with high cutting speed (10.2m/min), result in increased values and low process reproducibility which can be observed from bigger error bars when compared to low cutting speed. The summary of uncertainty calculation and Ra values (Ra_{test}) is presented in Table 5. It can be seen that the uncertainty slightly decreases with increased concentration of the oil in solution (W1 compared to W2) or when straight mineral oil was used.

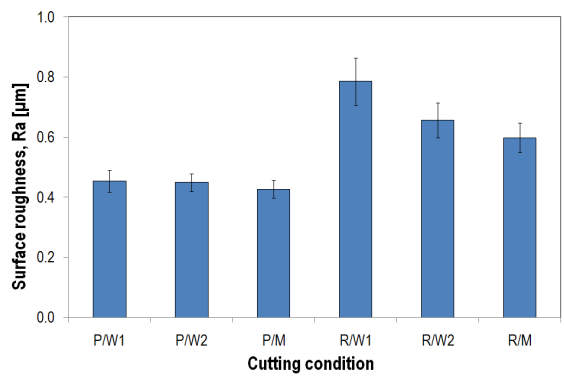

Fig. 6: Surface roughness measurement results. Error bars represent expanded uncertainty at 95% confidence interval (k=2).

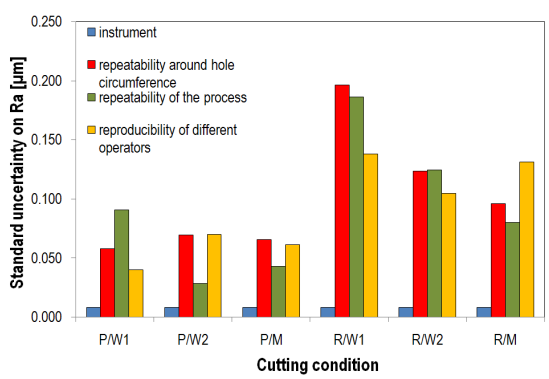

Fig. 7: Uncertainty caused by various contributors.

The influence of uncertainty contributors including repeatability around the hole circumference, repeatability of the process and reproducibility from different operators, is shown in Fig. 7 and it is in a good agreement with Fig. 6: individual uncertainty contributors are dependent on the selection of a combination of cutting speed/lubrication.

It is shown in Fig. 7 that the measuring repeatability in the reamed hole and process repeatability decreases with increased concentration of the oil (or when using a straight mineral oil) when high cutting speed was applied. However, it is generally difficult to describe which uncertainty contributor is more pronounced in the case of low cutting speed since this varies no matter which cutting fluid was used.

In reaming tests generally, low Ra values can be combined with poor surface quality. However, it was observed in the present investigation that low Ra values correspond to good surface quality.

5.2 Replication

Tool replication on profiles from portable instrument

It is assumed that the "long" wavelengths on the profiles correspond to feed marks coming from the cutting tool. As it can be seen in Fig. 8, the number of peaks within an evaluation length ln = 4mm for a given feed 0.279mm/rev is approximately 14. This is confirmed by a simple formula expressed below:

$$No.of\ peaks = ln/f = 4/0.279 = 14.3 \qquad (5)$$

Each peak on the profile therefore represents a feed mark caused by the reamer. The number of peaks for individual cutting conditions corresponds to the feed of the tool, however is more distinct for low cutting speed.

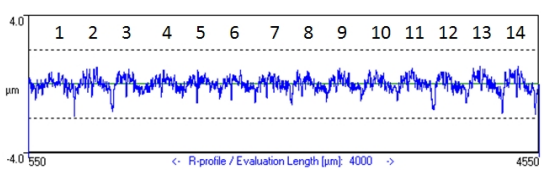

Fig. 8: Profile of a reamed surface. Each peak on the surface profile represents a feed that the tool moves per revolution.

It could be seen from the profiles obtained from all the measurements that surfaces produced with low cutting speed are generally reproducible when considering different operators, unlike the surfaces produced with high cutting speed. These result in uneven, random surface profiles and vary considerably for different operators. However, it was observed that a higher concentration of the oil in water-based cutting fluid (or when using a mineral straight oil) results in surface profiles that are more reproducible at a higher cutting speed. Moreover, three cutting fluids (W1, W2 and M) used in connection with a low cutting speed result in "identical" surface profiles. When cutting with high cutting speed, the feed marks were difficult to be recognized.

It was observed that the surface roughness profiles in the case of W1 lubrication result in high reproducibility within the individual specimens (high repeatability of surface roughness in the reamed hole) but vary for specimens in the batch (low reproducibility from the process), see Fig. 9.

Tool replication of the cutting tool on the reamed hole surface was the best observable when low speed was used in connection with all cutting fluids employed in the test. Six marks representing flutes on the reamer are shown in Fig. 10. More random profiles in the case of high cutting speed did not allow distinguishing flutes of the reamer.

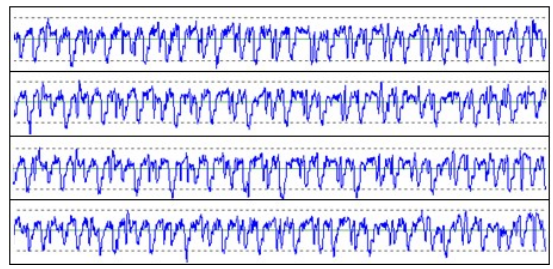

a) Workpiece 1.

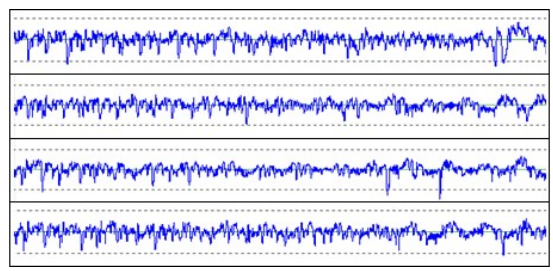

b) Workpiece 2.

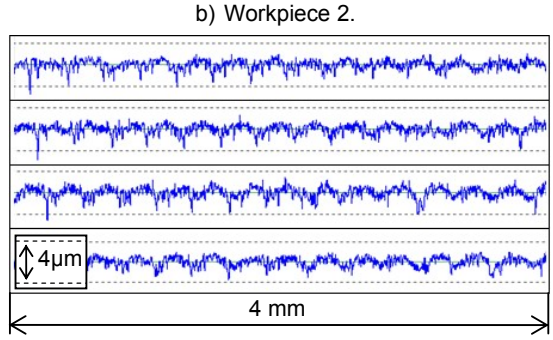

c) Workpiece 3.

Fig. 9: Surface roughness reproducibility using W1 lubrication at low cutting speed. Every 4 profiles represent measurements around the hole circumference. All scales as shown at the bottom.

	Cutting condition					
	P/W1	P/W2	P/M	R/W1	R/W2	R/M
Ra_{test}	0.455	0.449	0.427	0.786	0.656	0.598
u_{inst}	0.008	0.008	0.008	0.008	0.008	0.008
u_s	0.016	0.012	0.012	0.039	0.028	0.023
u_{test}	0.018	0.015	0.015	0.040	0.029	0.024
U_{TOT}	0.036	0.029	0.029	0.079	0.057	0.048

Table 5: Summary of results including uncertainty calculation. All values in µm.

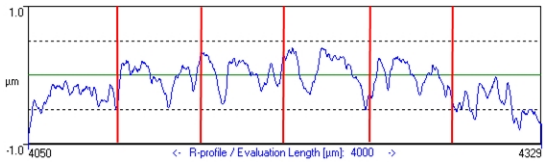

Fig. 10: Tool replication on the reamed surface. The length in horizontal direction is equal to the actual feed. The vertical lines correspond to a furrow width, w.

Tool replication on profiles from 3D optical microscope

The results from the 3D optical measurements have shown that it is not easy to distinguish tool replication on reamed surfaces. Cutting condition enabling visual evidence of the tool replication, and so appearance of furrow width, was when low cutting speed was used in combination with mineral straight oil (see Fig. 11).

6. CONCLUSIONS

An investigation on the reproducibility of surface roughness in reaming has been performed to document the applicability of this approach for testing cutting fluids. Reproducibility included three main factors: measuring repeatability in the reamed hole, repeatability of the process and reproducibility of different operators. It was observed from the profiles that surfaces produced with a low cutting speed were generally reproducible, unlike the surfaces produced with high cutting speed. These contained uneven, random surface profiles and varied considerably for different operators. However, it could be observed that a higher concentration of the oil in water-based cutting fluid (or when using a straight mineral oil) results in surface profiles that are more reproducible at higher cutting speed. Reproducibility from different operators was not significant and was the same for different cutting fluids.

From the surface profiles, an identification of individual feed marks from the tool was possible. This was however more distinct for low cutting speed rather than high cutting speed.

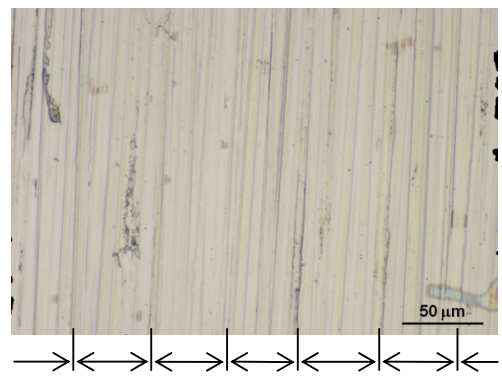

a) Image of a surface topography. Arrows correspond to a furrow width, w.

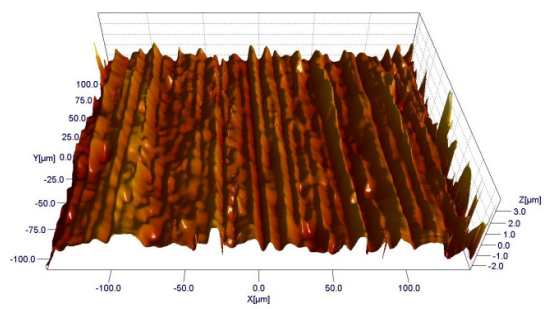

b) 3D profile taken in SPIP software.

Fig. 11: Surface topography for low cutting speed and mineral straight oil measured by a 3D optical microscope.

REFERENCES

[1] De Chiffre, L., Lassen, S., Pedersen, K. B. and S. Skade (1994). A reaming test for cutting fluid evaluation. *Journal of Synthetic Lubrication,* **11**, 17–34.

[2] L. De Chiffre (1978). Testing the overall performance of cutting fluids. *Lubrication Engineering*, **34**, 244–251.

[3] L. De Chiffre (1980). Mechanical testing and selection of cutting fluids. *Lubrication Engineering*, **36**, 33–39.

[4] De Chiffre, L., Tosello, G., Píška, M. and P. Müller (2009). Investigation on capability of reaming process using minimal quantity

lubrication. *CIRP - Journal of Manufacturing Science and Technology*, **2**(1), 47–54.

[5] W. Belluco (2000). Performance testing of cutting fluids. *Ph.D. thesis*, Technical University of Denmark.

[6] ISO 4287:1997 Geometrical product specifications (GPS) -- Surface texture: Profile method – Terms, definitions and surface texture parameters.

[7] ISO 3274:1975 Instruments for the measurement of surface roughness by the profile method -- Contact (stylus) instruments of consecutive profile transformation -- Contact profile meters, system M.

[8] ISO/IEC Guide 98-3:2008 - Uncertainty of measurement -- Part 3: Guide to the expression of uncertainty in measurement (GUM:1995).

[9] ISO 3274:1996 Geometrical Product Specifications (GPS) -- Surface texture: Profile method -- Nominal characteristics of contact (stylus) instruments.