# Variable-step-size LMS adaptive filter for digital chromatic dispersion compensation in PDM-QPSK coherent transmission system

Tianhua Xu[*a,b], Gunnar Jacobsen[b], Sergei Popov[a], Jie Li[b], Ke Wang[a,b], Ari T. Friberg[a]
[a]Royal Institute of Technology, Stockholm, SE-16440, Sweden; [b]Acreo AB, Electrum 236, Kista, SE-16440, Sweden

## ABSTRACT

High bit rates optical communication systems pose the challenge of their tolerance to linear and nonlinear fiber impairments. Digital filters in coherent optical receivers can be used to mitigate the chromatic dispersion entirely in the optical transmission system. In this paper, the least mean square adaptive filter has been developed for chromatic equalization in a 112-Gbit/s polarization division multiplexed quadrature phase shift keying coherent optical transmission system established on the VPIphotonics simulation platform. It is found that the chromatic dispersion equalization shows a better performance when a smaller step size is used. However, the smaller step size in least mean square filter will lead to a slower iterative operation to achieve the guaranteed convergence. In order to solve this contradiction, an adaptive filter employing variable-step-size least mean square algorithm is proposed to compensate the chromatic dispersion in the 112-Gbit/s coherent communication system. The variable-step-size least mean square filter could make a compromise and optimization between the chromatic dispersion equalization performance and the algorithm converging speed. Meanwhile, the required tap number and the converged tap weights distribution of the variable-step-size least mean square filter for a certain fiber chromatic dispersion are analyzed and discussed in the investigation of the filter feature.

**Key Words:** Coherent optical receivers, polarization division multiplexed quadrature phase shift keying (PDM-QPSK), chromatic dispersion (CD), least mean square (LMS) adaptive filter, variable-step-size least mean square (VLMS) adaptive filter

## 1. INTRODUCTION

Fiber impairments such as chromatic dispersion (CD) severely impact the performance of high speed optical fiber transmission systems[1,2]. Although current systems use dispersion compensation fibers (DCFs) to compensate the chromatic dispersion distortion, this increases the complexity and cost of the transmission systems. Digital coherent receivers allow equalization for linear transmission impairments in the electrical domain[3,4], and have become the most promising alternative approach to dispersion compensation fibers. While coherent detection was experimentally demonstrated as early as 1979, its use in commercial systems has been hinded by the additional complexity, due to the need to track the phase and polarization of the incoming signal[5]. In a digital coherent receiver these functions are implemented in the electrical domain leading to a dramatic reduction in complexity. Furthermore since coherent

[*] Tianhua Xu: tianhua@kth.se; telephone number: +46-762178043; fax: +46-87896672

detection maps the entire optical field within the receiver bandwidth into the electrical domain it maximizes the efficacy of the signal processing. This allows fiber impairments which have traditionally limited high bit rate systems to be overcome adaptively[6-15].

Coherent optical receivers using digital signal processing techniques can mitigate the fiber impairments in the optical transmission system, including the chromatic dispersion equalization with digital filters. It is possible to completely compensate chromatic dispersion with zero penalty in coherent detection receivers by means of electronic equalization techniques[13-15]. Several digital filters have been applied to compensate the chromatic dispersion in the time domain and the frequency domain[14,15]. In this paper, a least mean square (LMS) adaptive finite impulse response (FIR) filter has been developed to compensate CD in a 112-Gbit/s polarization division multiplexed quadrature phase shift keying (PDM-QPSK) coherent optical transmission system which is established on the VPI simulation platform[16]. The influence of the step size parameter in the least mean square filter on CD compensation performance is emphatically investigated and analyzed in the simulation results, and the influence of the step size on the convergence of the tap weights in the adaptive filter is also discussed. It is found that the chromatic dispersion equalization shows a better performance when a smaller step size is used. However, the smaller step size in least mean square filter will lead to a slower iterative operation to achieve the guaranteed convergence. In order to solve this contradiction, an adaptive filter employing variable-step-size least mean square (VLMS) algorithm is proposed to compensate the chromatic dispersion in the 112-Gbit/s PDM-QPSK coherent communication system. The VLMS adaptive filter could make a compromise and optimization between the chromatic dispersion equalization performance and the algorithm converging speed. The principle of the LMS algorithm and the VLMS algorithm are introduced and analyzed, and the structure of the adaptive equalizer is also illustrated and investigated in the text. Meanwhile, the required tap number and the converged tap weights distribution of the variable-step-size least mean square filter for a certain fiber chromatic dispersion are analyzed and discussed in the investigation of the filter feature. The CD compensation performance of the VLMS digital filter is characterized by evaluating the behavior of the bit-error-rate (BER) versus the optical signal-to-noise ratio (OSNR) in the PDM-QPSK system compared with the LMS adaptive filter using VPI simulation platform[16].

## 2. PRINCIPLE OF LMS ADAPTIVE ALGORITHM AND VLMS ADAPTIVE ALGORITHM

The principle of the least mean square algorithm and the variable-step-size least mean square algorithm are introduced and analyzed in this section. And the influence of the step size parameter on the value updating and convergence of the taps weights are also explained and discussed in the following text.

### 2.1 Principle of least mean square adaptive algorithm

The least mean square algorithm is an iterative adaptive algorithm that can be used in the highly time varying signal environment. The LMS algorithm uses the estimates of the gradient vector from the available data. The LMS algorithm incorporates an iterative procedure that makes successive corrections to the weights vector in the direction of the negative of the gradient vector which eventually leads to the minimum mean square error. The equalized output signal and the weight vector of the LMS adaptive filter are given by[17]

$$y(n) = w^h(n)x(n) \tag{1}$$

$$w(n+1) = w(n) + \mu x(n)e^*(n) \tag{2}$$

$$e(n) = d^*(n) - y(n) \tag{3}$$

where $x(n)$ is the input signal, $y(n)$ is the equalized output signal, $w(n)$ is the weight vector, $d(n)$ is the desired symbol, $e(n)$ represents the estimation error between the output signal and the desired symbol, and $\mu$ is a coefficient called step size parameter and controls the convergence characteristics of the LMS algorithm. The weight vector $w(n)$ is initiated with an arbitrary value $w(0)$ at $n = 0$, and the weight vector is updated in a symbol-by-symbol iterative manner, and achieves convergence when $e(n)$ approaches to zero.

In order to guarantee the convergence of the LMS equalizer transfer function $h(n)$, the step size parameter $\mu$ needs to satisfy the condition of $0 < \mu < 1/\lambda_{\max}$, where $\lambda_{\max}$ is the largest eigenvalue of the correlation matrix $R = x(n)x^h(n)$. The convergence speed of the algorithm is inversely proportional to the eigenvalue spread of the correlation matrix $R$. When the eigenvalues of $R$ are spread, convergence may be slow. The eigenvalue spread of the correlation matrix is estimated by computing the ratio of the largest eigenvalue to the smallest eigenvalue of the matrix. If the step size $\mu$ is chosen to be very small, then algorithm converges very slowly. A large value of $\mu$ may lead to a faster convergence, but may be less stable around the minimum value.

### 2.2 Principle of variable-step-size least mean square adaptive algorithm

The LMS algorithm is robust and it needs the least computation power. However, the adjustment of step size in the LMS algorithm affects both the convergence speed and the residual error level. If the step size of the LMS algorithm can be adjusted in a proper way, the performance of the LMS algorithm can be enhanced. We would like to see a big step size at the beginning of the convergence process to have the fastest convergence speed and a smaller step size after the convergence to have the smallest residual error level. The variable-step-size LMS algorithm is introduced to improve the performance of convergence speed and residual error level of the LMS algorithm. The step size in the variable-step-size LMS algorithm increases or decreases as the mean square error increases or decreases, allows the adaptive filter to track the changes in the system as well as produce a small steady state error. The equalized output signal and the weight vector of the variable-step-size is expressed as

$$y(n) = w^h(n)x(n) \tag{4}$$

$$w(n+1) = w(n) + \mu(n)x(n)e^*(n) \tag{5}$$

$$\mu(n+1) = \alpha\mu(n) + \gamma e^2(n) \tag{6}$$

$$e(n) = d^*(n) - y(n) \tag{7}$$

where $x(n)$ is the input signal, $y(n)$ is the equalized output signal using variable-step-size LMS filter, $w(n)$ is the weight vector, $d(n)$ is the desired symbol, $e(n)$ represents the estimation error between the output signal and the desired symbol, and $\mu(n)$ is the step size coefficient adjusting the convergence characteristics and the residual error of the variable-step-size LMS algorithm, and is updated with the variation of the estimation error $e(n)$. The parameters $\alpha$ and $\gamma$ are the coefficients controlling the step size to update with the estimation error $e(n)$, and the arrangement of the parameters are $0 < \alpha < 1$ and $\gamma > 0$. The convergence speed of the variable-step-size can be adjusted by setting different values for the energy attenuation factor $\alpha$.

As can be seen from equation (6), the step size $\mu(n)$ is always positive and is controlled by the size of the prediction error and the parameters $\alpha$ and $\gamma$. A typical value of $\alpha$ that was found to work well in simulations is $\alpha = 0.97$, and

the parameter $\gamma$ is usually selected as $\gamma = 4.8 \times 10^{-4}$. Intuitively speaking, a large prediction error increases the step size to provide faster tracking. If the prediction error decreases, the step size will be decreased to reduce the estimation misadjustment[18]. Advantages of using this variable-step-size LMS algorithm are improved performance at a cost of only four more multiplications or divisions in each iteration as compared with the conventional LMS algorithm.

### 2.3 Structure of LMS and variable-step-size LMS adaptive equalizers

The schematic of the linear adaptive least mean square filter and variable-step-size least mean square filter with N weights could both be described as the equalizer structure shown in Fig. 1, where $T$ is the symbol period, and coefficients $W_i$ are the tap weights in the LMS (or variable-step-size LMS) equalizer. The linear adaptive LMS (or variable-step-size LMS) equalizer consists of a tapped delay line that stores data samples from the input signal. Once per symbol period, the adaptive equalizer outputs a weighted sum of the values in the delay line and updates the tap weights to prepare for the next symbol period. The tap weights value are updated according to the step size coefficient and the estimation error between the output signal and the desired signal.

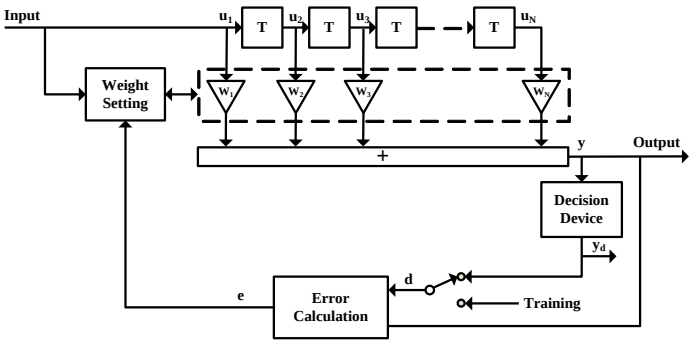


Fig. 1. Schematic of LMS and variable-step-size LMS adaptive filters

## 3. SIMULATION INVESTIGATION OF PDM-QPSK TRANSMISSION SYSTEM

The installation of the 112-Gbit/s PDM-QPSK coherent optical transmission system established in the VPI simulation platform is illustrated in Fig. 2.

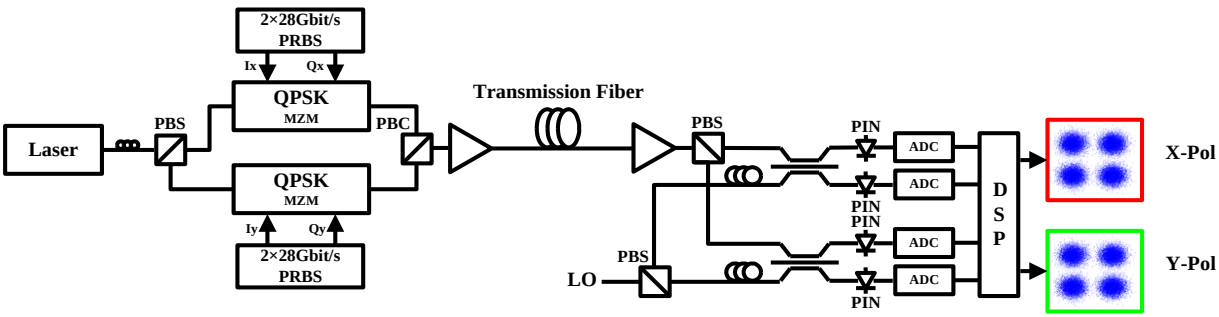


Fig. 2. Schematic of 112-Gbit/s PDM-QPSK coherent optical transmission system

The electrical data from four 28-Gbit/s pseudo random bit sequence (PRBS) generators are modulated into two orthogonally polarized QPSK optical signals by two Mach-Zehnder modulators, which are then integrated into one fiber transmission channel by a polarization beam combiner to form the 112-Gbit/s PDM-QPSK optical signal. Using an optical local oscillator (LO) in the coherent receiver, the received optical signals are mixed with the LO laser to be transformed into four electrical signals by the photodiodes and then digitalized by the analog-to-digital convertors (ADCs) at double sampling rates. Thus the impairments of chromatic dispersion in the transmission channel could be equalized with diverse digital filters.

## 4. SIMULATION RESULTS OF CHROMATIC DISPERSION COMPENSATION

To illustrate the features of the variable-step-size LMS filter, the compensation of CD from a standard single mode fiber with dispersion coefficient $D = 16\,ps/(nm \cdot km)$ are investigated and analyzed by comparing with the LMS adaptive filter. The tap weights are updated iteratively in both LMS adaptive equalizer and variable-step-size equalizer, here we mainly concentrate on the converged tap weights in the two filters. The converged tap weights of the LMS adaptive filter with 37 taps and 0.1 step size for compensating 60 km fiber dispersion are illustrated in Fig.3. We could see that in the LMS adaptive filter, the central tap weights take more dominant roles in the chromatic dispersion equalization in all the tap weights magnitudes, real parts and imaginary parts diagrams. For a fixed fiber dispersion, the tap weights in LMS adaptive filter approach to zero, when the corresponding taps order exceeds a certain value, and this value indicates the least required taps number for compensating the chromatic dispersion effectively. This also illustrates the optimization characteristic of the least mean square adaptive algorithm. It could be seen from Fig.3 that the required taps number in the LMS equalizer for equalizing 60 km fiber dispersion is 23 taps.

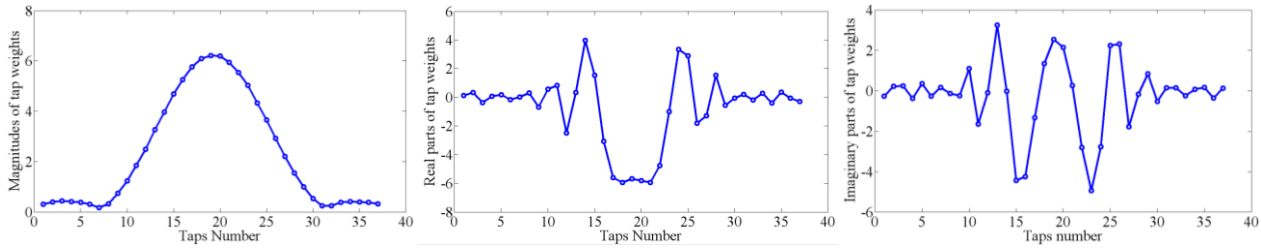


(a) (b) (c)

Fig. 3. Tap weights of LMS adaptive filter (Tap orders are centralized), (a) Magnitudes of tap weights in LMS filter, (b) Real parts of tap weights in LMS filter, (c) Imaginary parts of tap weights in LMS filter

The performance of chromatic dispersion compensation employing the LMS adaptive filter with step size value $\mu = 0.1$ using 9 taps for 20 km fiber dispersion and 2305 taps for 6000 km fiber dispersion are shown in Fig. 4. We could see from the figure that the two CD equalization results have little penalty compared with the back-to-back measurement when the fiber loss is neglected in the simulation work.

The simulation results of chromatic dispersion compensation employing LMS adaptive filter with different step size values using 401 taps for 1500 km fiber dispersion are shown in Fig. 5. It could be seen from Fig. 5 that the CD compensation results have a better performance with the step size decreasing, while a smaller step size will lead to the slower converging speed. Also we could see that the BER performance behave very closely with each other, when the

step size value is below $\mu = 0.1$, and the BER behavior become worse when the step size increases above $\mu = 0.1$. Therefore, the step size in the LMS adaptive equalizer is usually selected as $\mu = 0.1$ to obtain the optimization.

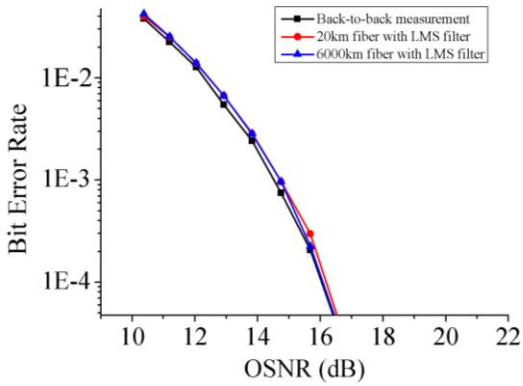


Fig. 4. Chromatic dispersion compensation using LMS filter with 0.1 step size (neglecting fiber loss)

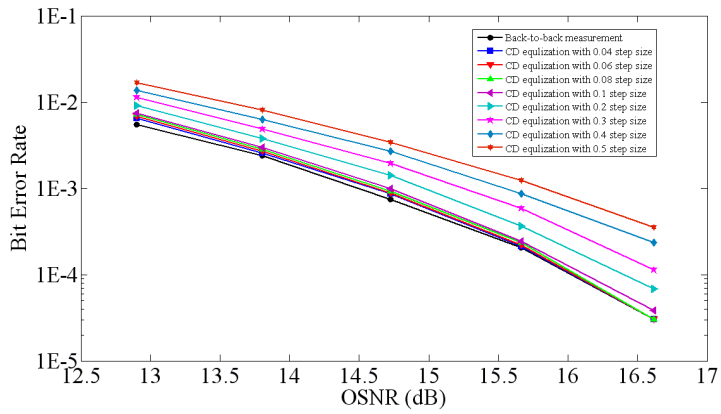


Fig. 5. Chromatic dispersion compensation using LMS filter with different step sizes (neglecting fiber loss)

The converged tap weights of the variable-step-size LMS adaptive filter for 60 km fiber dispersion with 37 taps and step size varying from 0.06 to 0.6 are illustrated in Fig.6.

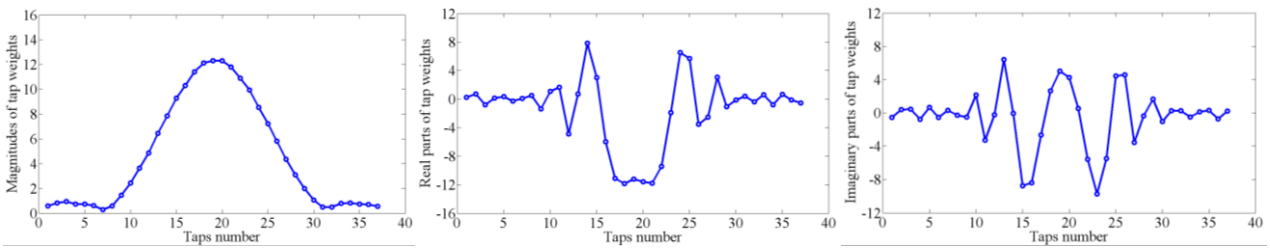


(a) (b) (c)

Fig. 6. Tap weights of variable-step-size LMS adaptive filter (Tap orders are centralized), (a) Magnitudes of tap weights in VLMS filter, (b) Real parts of tap weights in VLMS filter, (c) Imaginary parts of tap weights in VLMS filter

We could see that in the variable-step-size LMS adaptive filter, the central tap weights also take more dominant roles in

the CD equalization in all the tap weights diagrams. It could also be found that the converged tap weights in the variable-step-size LMS filter vary consistently with the LMS adaptive filter tap weights, whereas the tap weights magnitudes in the variable-step-size LMS equalizer are larger than the tap weights magnitudes in the LMS equalizer.

In order to optimize the convergence speed and the compensation effect, the variable-step-size LMS algorithm is introduced and employed in the adaptive filter. The performance of the CD compensation for 60 km fiber dispersion using the variable-step-size LMS equalizer compared with LMS equalizer are illustrated in Fig. 7. The VLMS adaptive equalizer could achieve the same CD compensation performance with the LMS adaptive equalizer, meanwhile, the VLMS filter using the step size varying from 0.06 to 0.6 that accelerates the algorithm converging speed.

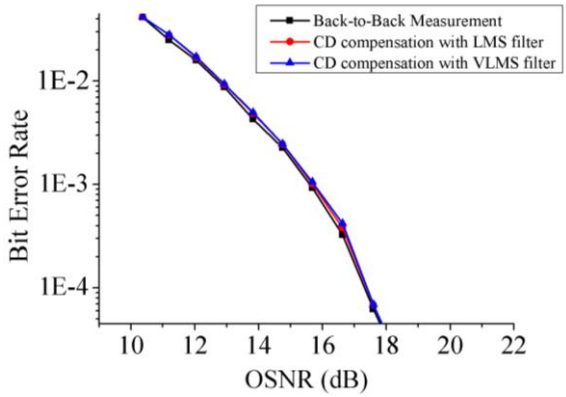


Fig. 7. CD compensation using LMS and variable-step-size LMS adaptive filters (neglecting fiber loss)

## 5. CONCLUSIONS

The variable-step-size least mean square equalizer is developed to compensate the chromatic dispersion in the 112-Gbit/s PDM-QPSK coherent optical transmission system. The variable-step-size LMS adaptive filter could make a compromise between the algorithm converging speed and the CD compensation performance compared with the traditional LMS adaptive filter. The tap weights in the LMS filter and the VLMS filter are analyzed, and the chromatic dispersion compensation effects using the two adaptive filters are compared by evaluating the BER versus OSNR behavior in the VPI simulation platform.

## REFERENCES

[1] Henry, P. S., “Lightwave Primer”, IEEE J. Quantum Electron. 21(12), 1862-1879 (1985).

[2] Agrawal, G. P., Fiber-optic communication systems (Third Edition), John Wiley & Sons, Inc., New York, chapter 2 (2002).

[3] Proakis, J. G., Digital Communications (Fifth Edition), McGraw-Hill Companies, Inc., Boston, chapter10 (2008).

[4] Bulow, H., Buchali, F. and Klekamp, A., “Electronic dispersion compensation”, J. Lightwave Technol. 26(1), 158-167 (2008).

[5] Taylor, M. G., “Coherent detection method using DSP for demodulation of signal and subsequent equalization of propagation impairments”, IEEE Photonics Technol. Lett. 16(2), 674-676 (2004).

[6] Savory, S. J., Stewart, A. D., Wood, S., Gavioli, G., Taylor, M. G., Killey, R. I. and Bayvel, P., “Digital equalisation of 40Gbit/s per wavelength transmission over 2480km of standard fibre without optical dispersion compensation”, Proc. ECOC, Th2.5.5 (2006).

[7] Savory, S. J., Gavioli, G., Killey, R. I. and Bayvel, P., “Electronic compensation of compensation of chromatic dispersion using a digital coherent receiver”, Opt. Express 15(5), 2120-2126 (2007).

[8] Fliudger, C. R. S., Duthel, T., Wuth, T. and Schulien, C., “Uncompensated transmission of 86Gbit/s polarization multiplexed RZ-QPSK over 100km of NDSF employing coherent equalisation”, Proc. ECOC, Th4.3.3 (2006).

[9] Laperle, C., Villeneuve, B., Zhang, Z., McGhan, D., Sun, H. and O’Sullivan, M., “Wavelength division multiplexing (WDM) and polarization mode dispersion (PMD) performance of a coherent 40Gbit/s dual-polarization quadrature phase shift keying (DP-QPSK) transceiver”, Proc. OFC, PDP16 (2007).

[10] Charlet, G., Renaudier, J., Salsi, M., Mardoyan, H., Tran, P. and Bigo, S., “Efficient Mitigation of Fiber Impairments in an Ultra-Long Haul Transmission of 40Gbit/s Polarization-Multiplexed Data, by Digital Processing in a Coherent Receiver”, Proc. OFC, PDP17 (2007).

[11] Savory, S. J., Mikhailov, V., Killey, R. I. and Bayvel, P., “Digital coherent receivers for uncompensated 42.8Gbit/s transmission over high PMD fibre”, Proc. ECOC, invited paper 10.4.1 (2007).

[12] Han, Y. and Li, G., “Coherent optical communication using polarization multiple-input-multiple-output”, Opt. Express, 13(19), 7527-7534 (2005).

[13] Secondini, M., Forestieri, E. and Prati, G., “Adaptive minimum MSE controlled PLC optical equalizer for chromatic dispersion compensation”, J. Lightwave Technol. 21(10), 2322-2331 (2003).

[14] Savory, S. J., “Digital filters for coherent optical receivers”, Opt. Express 16(2), 804-817 (2008).

[15] Kuschnerov, M., Hauske, F. N., Piyawanno, K., Spinnler, B., Napoli, A. and Lankl, B., “Adaptive chromatic dispersion equalization for non-dispersion managed coherent systems”, Proc. OFC, OMT1 (2009).

[16] www.vpiphotonics.com

[17] Widrow, B., and Stearns, S., Adaptive Signal Processing, Prentice-Hall, New Jersey, chapter 4 (1985).

[18] Bellanger, M., Digital Processing of Signals: Theory and Practice, Wiley, New York, chapter 5 (1984).

[19] Kwong, R. H. and Johnston, E. W., “A variable step size LMS algorithm”, IEEE Trans. Signal Process. 40(7), 1633-1642 (1992).

[20] Chen, W. Y. and Haddad, R. A., “A variable step size LMS algorithm”, Proc. 33rd Midwest Symp. on Circuits and Syst. 1, 423 - 426 (1990).