Power Waves Formulation of Oscillation Conditions: Avoidance of Bifurcation Modes in Cross-Coupled VCO Architectures

Sidina Wane [1], and Damienne Bajon [2]

[1] NXP-Semiconductors, Esplanade Anton Philips 14906, Colombelles Caen – France
sidina.wane@ieee.org

[2] ISAE-Université de Toulouse, 10 avenues Edouard Belin Toulouse-France
damienne.bajon@isae.fr

***Abstract* — This paper discusses necessity of power-waves formulation to extend voltage-current oriented approaches based on linear concepts such as admittance/impedance operators and transfer-function representations. Importance of multi-physics methodologies, throughout power-waves formulation, for the analysis and design of crystal oscillators is discussed. Interpretation of bifurcation modes in differential cross-coupled VCO architectures in terms of gyrator-like behavior, is proposed. Impact of amplitude level control (ALC) on large-signal phase noise performances is underlined showing necessity of robust control analysis approach relative to power-energy considerations.**

I. Introduction

Traditional oscillators design and analysis are generally based on voltage-current formulations involving impedance or admittance operators and transfer-functions representation. Thus, conventional mixed-signal circuit metrics such as eye-diagrams, jitter, phase noise, etc… are derived from voltage-current considerations. At RF, microwave or higher frequencies the concept of voltage and current requires to be extended with power-waves concept or energy oriented derivations.

This paper discusses power-waves formulation for oscillators design and analysis. Although the proposed analysis applies for all kind of oscillating systems (*LC resonators, BAW resonators, Ring-resonators, electro-mechanical resonators, etc*…), particular attention will be directed towards quartz crystal oscillator systems where the inherent coupling between mechanical and electrical effects imposes power-waves multi-physics modeling approaches to properly deal with energy transfer and higher order modal conversions.

In the first section of this paper, a background overview on power-waves formulation and associated challenges is presented. The second section discusses necessity of power-waves formulation for crystal oscillators, and importance of multi-physics co-simulation methodologies. Interpretation of bifurcation modes in differential cross-coupled VCO architectures in terms of gyrator behavior is discussed. Influence of ALC on large-signal transient phase noise performances, accounting for harmonic-to-harmonic coupling, is discussed

TABLE-I: Voltage-Current, S-parameters, Power-Waves and Energy-based Formulations: Operators, advantanges/Limitations and challenges

	Formulation Approaches & Assumptions			
	Voltage-Current Approach	*Classical S-parameters Approach*	*Generalized Power-Waves Approach*	*Energy Oriented Approach*
Operators	Impedance or admittance operators	Linear Scattering or reflection operators	Generalized Scattering or reflection operators	Hamiltonian, Lagrangian operators
Perceived Advantages	Link with network representa-tion when broadband response available	Bounded operators. High frequency characteriza-tion and analysis	Bounded operators. Nonlinear analysis and modeling. Modes conversion and transfer	Bounded operators. Unified physics analysis framework. Multi-physics co-analysis and co-simulation
Perceived Limitations	Unbounded operators Not appropriate for nonlinear analysis	Not appropriate for nonlinear analysis Assumes mono-modal description	Proper formalism to unify existing AC, DC, small-signal and large-signal approaches	Lack of unified design environment for bridging different disciplinary fields Lack of unifying methodology & way-of-working
Perceived Challenges	Physics-based broadband network derivations with passivity-causality preservation	Link with Network methods synthesis. Noise formulation metrics. Extension to multi-modal analysis	Power-Source modeling of transfer functions in terms of power waves Derivation of Jitter, PhaseNoise, eye-diagram metrics	Energy-Source modeling Link with Network methods synthesis fulfilling energy conservation Multi-scale Energy Control-formalism for combining sub-systems with various scales.

II. Background Review on Power-Waves Formulations and Associated Challenges

Challenges of power-waves formulation for nonlinear systems mainly lies in three major aspects as summarized in Tab.I where current-voltage and waves oriented formulations are compared in reference to the nature of the operators they handle. The first challenge concerns the necessity to extend classical S-parameter definition (*restricted to mono-modal assumptions*) with the notion of large signal reflection coefficients, properly incorporating nonlinear effects. The second challenge is in link with proper transfer/conversion analysis between active, reactive

reactive and apparent power-wave components. The third challenge states the need for unified representation formalism of systems electrical behavior in terms of power-waves energy transfer and conversion. Such unified formalism will allow for effective low power design optimization and power-energy oriented control not easy to achieve with conventional voltage-current based approaches. In addition power-waves formulation establishes the required bridging connections between different disciplinary fields (*mechanics, aerodynamics, acoustics, etc…*) for multi-physics co-simulation and co-analysis. Important efforts have been devoted to attempts for deriving generalized power-waves definition that unifies linear and nonlinear representations. Definitions of active (P), reactive (Q) and apparent (S) powers, in the context of linear circuits associated with sinusoidal excitation were proposed in 1897 by Steinmetz [1]. Steinmetz stated orthogonality between the different forms of power, assuming $S^2=P^2+Q^2$. Extensions of these definitions to nonlinear analysis have been proposed by Budeanu [2], Shepard [3] and Czarnecki [4]. Criticism of Budeanu's reference model by Czarnecki was concerned with measurement aspects and power compensation controls. The proposed extensions in assuming orthogonality between constitutive power components, ignore any potential interaction between them through conversion or transfer process. Although various mathematical formulations have been proposed for balanced active and reactive power representations, there are still questions regarding their physical meaning and interpretation. In 1996, a report on discussions relative to practical definitions for powers, initiated with an IEEE working group has been published. In this report, derivation of power-components of a system with nonlinear load is proposed by Emanuel [5]. In the proposed derivations additional component D is introduced to the orthogonal sum: $S^2=P^2+Q^2+D^2$, while concluding that some of derived expressions are purely mathematical without any physical meaning. In [6] a time-domain instantaneous formulation of powers in linear and nonlinear electrical circuits is presented. In [7] failure of classical power definitions to fulfill Tellegen's conservation of power (energy) theorem is discussed. The need for formulating power-waves representation in a coordinate-free concept without resorting to harmonic analysis was expressed by various authors. Nowomiejski [8] has proposed a formulation of electrical power representation using correlation analysis, based on early work of Quade [9]. Inspired by Quade's results, Edelmann [10] used a vector-space representation in his approach.

III. Necessity of Power-Waves Formulation For Multi-Physics Analysis Of Crystal Oscillators:

A) Nonlinear Effects in Quartz Resonators

Crystal oscillators are representative of multi-physics systems, as their behavior results from internal interactions of both mechanical and electrical aspects. The choice of quartz crystal oscillators for illustrative application to underline the necessity of multi-physics co-simulation approach is basically motivated by two main reasons. The first motivation for quartz crystal oscillators, in this work, comes from the electromechanical attributes of quartz resonators, which naturally imposes multi-physics approach. In [11] effects of magnetic field on quartz crystal oscillators are discussed. The second motivation results from the necessity of power-waves formulation to account for nonlinear type of effects referenced as "Drive-Level-Dependency" phenomena [12]. These complex effects, reported by engineers and manufacturers based on experimental observations over several decades are generally attributed to surface defects resulting from microscopic scraps of various origins that can be accentuated by temperature variation and ageing. In addition, from a specification point of view drive-level of quartz resonators is generally given in terms of power rather than voltage or current consumption, hence the necessity of power-waves formulation. The requirement of ALC comes from the need to compensate the aforementioned type of effects by ensuring stable output amplitude level over wide temperature range and robust against process variations. Furthermore ALC ensures optimum trade-off between low noise biasing conditions and time oscillation settling, with reliable start-up.

B) Multi-Physics Modeling Approach: Application to Cross-Coupled VCO Architectures

Oscillator design generally uses a feedback system representation, as in Fig.1(a), with transfer functions $H(j\omega)$ and $\beta(j\omega)$ associated to the *resonator* and *amplifier*. It should be underlined that feedback representation assumes linear or weakly nonlinear analysis. Although such an assumption might be sufficient for qualitative and quantitative evaluation of oscillation conditions, transient representation remains more adequate for accurate predictive modeling. Transient analysis of high-Q oscillators remains extremely challenging. Most of available noise analysis tools are based on small-signal assumption, and generally do not operate a native time-domain formulation. In [13] numerical instabilities with linearization techniques, in the frequency domain, are discussed. In reference to a one-port system, the following definition of time-domain incident and reflected power-waves $a(t)$ and $b(t)$ is considered:

$$\begin{cases} a(t) = 0.5 Z_{ref}^{-1/2} v(t) + 0.5 Z_{ref}^{1/2} i(t) \\ b(t) = 0.5 Z_{ref}^{-1/2} v(t) - 0.5 Z_{ref}^{1/2} i(t) \end{cases} \quad (1)$$

Z_{ref} being an arbitrary real reference impedance.
Considering a nonlinear relation $i(t)$ as function of $v(t)$:

$$i(t) = \Upsilon\ [v(t)] \quad (2)$$

the expression of the power-waves is given by (3)

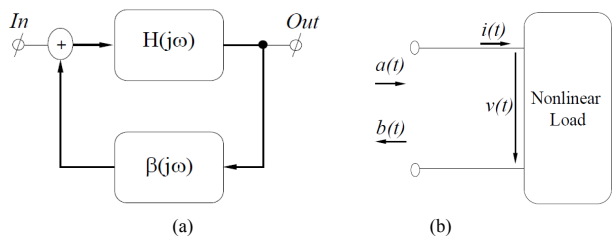

Fig.1 Illustrative linear feedback system representation of oscillators (a), one-port representation in terms of power-waves (b).

$$\begin{cases} a(t) = 0.5 Z_{ref}^{-1/2} v(t) + 0.5 Z_{ref}^{1/2} \Upsilon\left[v(t)\right] \\ b(t) = 0.5 Z_{ref}^{-1/2} v(t) - 0.5 Z_{ref}^{1/2} \Upsilon\left[v(t)\right] \end{cases} \quad (3)$$

Use of describing function concept in [14] leads to the following expression for the weakly nonlinear reflection coefficient approximation derived assuming $b(t)=\kappa[a(t)]$:

$$\Gamma_{NL} = \left[\int_0^T a(t)\kappa[a(t)]dt\right]\left[\int_0^T a^2(t)dt\right]^{-1} \quad (4)$$

where T is the time-period of the fundamental frequency, with:

$$\int_0^T \frac{\partial}{\partial \Gamma_{NL}} \{\kappa[a(t)] - \Gamma_{NL} a(t)\}^2 dt = 0 \quad (5)$$

Let's consider, for simplicity reasons, without loss of generality, a nonlinear characteristic function in the form:

$$\Upsilon\left[v(t)\right] = \alpha_1 v(t) + \alpha_3 v^3(t) \quad (6)$$

with $v(t)=V_{amp}sin(\omega_{osc}t+\phi)$. The hypothesis of single-harmonic voltage associated to multi-harmonic current is discussed in [5]. Assuming periodic power-waves (including multi-harmonic cases), the total energy for a time-period T is given by the following relation:

$$E = \int_0^T \left[a^2(t) - b^2(t)\right]dt \quad (7)$$

Cancellation of dissipated energy on the system active-core and resonator leads to the following solution:

$$v(t) = \underbrace{\left[\frac{4}{3}\left(\frac{\alpha_1 - Y_R}{\alpha_3}\right)\right]^{\frac{1}{2}}}_{V_{amp}}\left[1 + e^{-(t-t_s)\frac{\alpha_1 - Y_R}{Y_R Q_R}\omega_{osc}}\right]^{\frac{1}{2}} \sin\left(\omega_{osc} t + \phi\right) \quad (8)$$

where t_s and Q_R are the settling time and resonator quality-factor respectively.

It has been verified that direct resolution of Van der Pol differential equation on one side, and the condition of energy cancellation (7), on the other side, both lead to the same solution for the oscillation amplitude. The amplitude swing V_{amp} is solution of the following equation:

$$V_{amp}^2\left(Y_{\mathrm{Re}\,sonator} + \alpha_1 + \frac{3}{4}\alpha_3 V_{amp}^2\right) = 0 \quad (9)$$

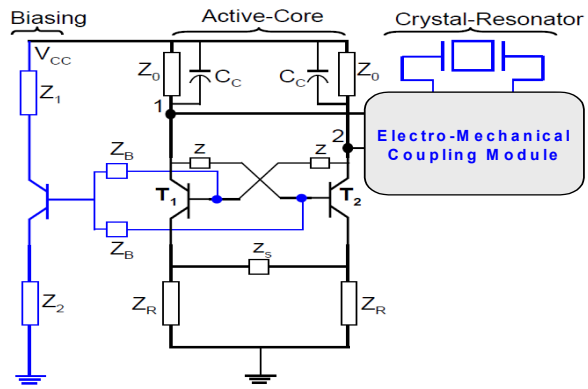

Fig.2 Crystal oscillator Cross-coupled architecture including electro-mechanical module for multi-physics analysis.

where Y_R is the oscillator resonator conductance losses. To account for nonlinear effects in quartz resonators discussed in the previous section, an electro-mechanical coupling module is incorporated in the equivalent circuit model of the oscillator at the junction interface of the quartz resonator and active core (Fig.2).

In Fig.2, the active core uses a cross-coupled pair of transistors. This module is obtained from broadband equivalent circuit synthesis of the quartz resonator behavior accounting for higher order harmonics. A small-signal derivation of the input admittance, assuming a differential state in reference to ports 1 and 2 in Fig.2(a) leads to the following expression for the input admittance $Y_{in} = 0.5\ (i_2 - i_1)/(V_2 - V_1)$

$$Y_{in} = \frac{1}{2 - \left[Z\left(1 + Z_{be}/Z_{bc} + Z_{be}/Z_B\right) + Z_{be}\right] \times \left[1 - Z/Z_{bc}\right]^{-1}} \frac{\left(g_m - 2/Z_{bc} - 1/Z_B\right)Z_{be} - 1}{} + \frac{1}{Z_{bc}} + \frac{1}{2Z_0} \quad (10)$$

g_m is the transistors trans-conductance, Z_{bc} and Z_{be} being the base-collector and the base-emitter impedances respectively. The analysis of the input admittance reveals gyrator-like behavior in Fig.3 (a) where the imaginary part of Y_{in} exhibits non-monotonic variation against frequency in the negative real part regime, toggling from inductive to capacitive behavior. While the capacitive behavior reinforces the desired oscillation mode, the inductive one creates spurious oscillation. The spurious oscillation mode results from the conflicting interaction of the active core inductive behavior with the resonator essentially acting as an inductive component (between its serial and parallel frequencies, the quartz resonator can be assimilated to an inductor). The association of observed bifurcation effects in cross-coupled VCO architectures, with gyrator-like behavior in the bifurcation regime provides an equivalent circuit description which renders possible mapping the different regimes of the oscillator in predictive broadband model. Such broadband model helps in deriving semi-analytical guidelines for efficient avoidance of spurious bifurcation modes. The bridge-model of the gyrator shown in Fig.4, circumvents the difficulty of controlled sources implementation traditionally used to represent gyrator

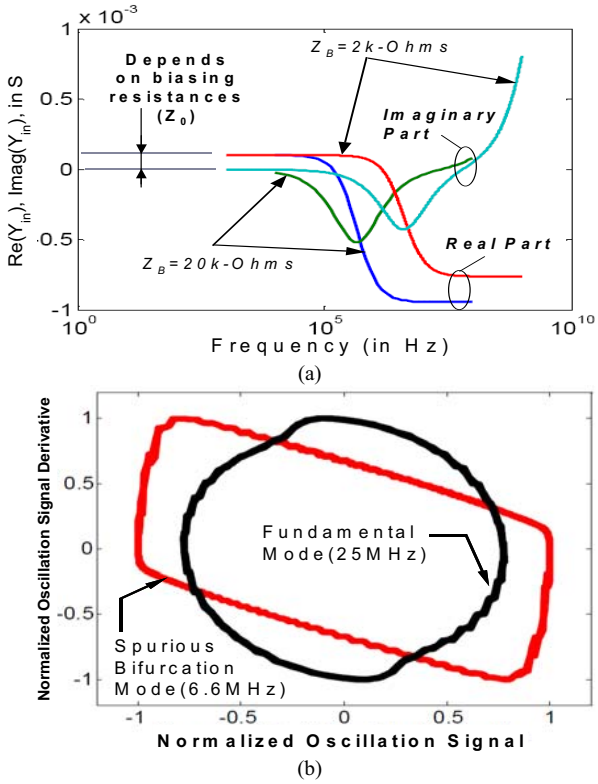

Fig.3: Input admittance real and imaginary parts of active core against frequency as function of biasing conditions (a). Phase portrait showing conversion of fundamental oscillation mode into bifurcation mode (b).

components in SPICE-like simulators. Significant effect of ALC module on phase noise performances is observed which demonstrate importance of proper design of amplitude regulation block. Optimization of ALC module through tradeoffs between amplitude regulation accuracy and frequency stability showed better phase noise performances in Fig.5 [15]. It should be underlined that the simulated phase-noise is based on large-signal native time-domain analysis.

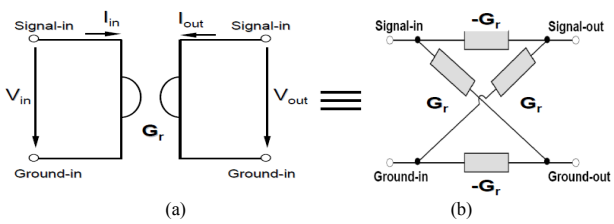

Fig.4 Gyrator symbol (a) and equivalent Bridge model (b).

In Fig.5, extended frequency analysis is intentionally performed to consider harmonic-to-harmonic coupling noise essential in stability analysis to prevent from chaos.

IV. CONCLUSION

Importance of multi-physics methodologies, throughout power-waves formulation, for large-signal analysis and design of crystal oscillators has been discussed.

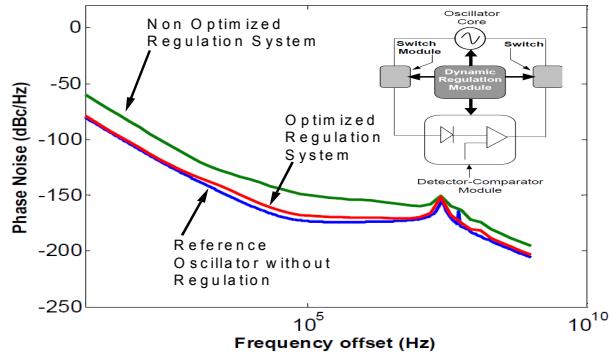

Fig.5 Impact of amplitude level regulation on phase-noise.

Interpretation of bifurcation modes in differential cross-coupled VCO architectures in terms of gyrator-like behavior, is proposed. Impact of ALC on time-domain phase noise performances, accounting for harmonic-to-harmonic coupling, are studied. Formulation of power integrity, signal integrity and control-theory metrics such as transfer functions, phase noise, jitter and eye-diagrams in terms of scattering power waves is under investigation.

REFERENCES

[1] C.P. Steinmietz, "Theory and Calculation of Altemating Current Phenomena", McGraw-Hill, New York, 'The W.J. Johnston Co.,1897.

[2] C.I. Hudeanu, "Puissances Réactives et Fictives", lnstitut Romain de I'Energie", Bucharest, Romania, 1927.

[3] W. Shepard and P. Zand, "Energy Flow and Power Factor in Nonsinusoidal Circuits", Cambridge University Press, 1979.

[4] L.S. Czarnecki, "What is Wrong with the Budeanu Concept of Reactive and Distortion Powcr and Why It Should be Abandoned", *IEEE Trans. on Instrumentation and Measurement*, Vol. IM-36, No. 3, September 1987, pp. 834-837.

[5] A.E. Emanuel, "Power in Nonsinusoidal Situations. A review of Definitions and Physical Meaning", *IEEE Transactions on Power Delivery*, Vol. 5, No. 3, July 1990, pp. 1377-1389.

[6] J. Cohen et al, Physical Time Domain Representation of Powers in Linear and Nonlinear Electrical Circuits, *IEEE Trans. on Power Delivery*, Vol.14, n°4, 1998.

[7] N. La White and M.D. Ilic, "Vector Space Decomposition of Reactive Power for Periodic Nonsinusoidal Signals", *IEEE Trans. on Circuits and Systems - I: Fundamental Theory and Applications*, Vol. 44, No. 4, April 1997, pp 338-346.

[8] Z. Nowomiejski."Generalized Theory of Electical Power," *Arch. f. Elektrotechn.* 63(1981)177-182.

[9] W.Quade, "Composition of the average, reactive and apparent power for nonsinusoidal currents and a new power definition for nonsymmetrical multi-phase nonsinusoidal currents" (in german). ETZ 58 (1937)1315-1341.

[10] Edelmann. H.: Average power, reactive power, apparent power for periodic currents and voltages from a functional analysis point of view (in german). Siemens Forsch.-U. Entw.-Ber.IO(1981), pp.l6.

[11] R. Brendel, "Influence of a magnetic field on quartz crystal resonators," *IEEE Trans. on Ultrasonics, Ferroelectrics and Frequency Control*, Volume 43, Issue 5, Sept. 1996 pp 818 - 831.

[12] P. Bates "Drive level dependence versus residual phase noise of fifth overtone AT cut quartz crystals," Frequency Control Symposium and Exhibition, 2000. *Proceedings of the 2000 IEEE/EIA International*, 7-9 June 2000 pp 233 – 237.

[13] W. Anzill, and P. Russer "A general method to simulate noise in oscillators based on frequency domain techniques" *IEEE Trans. on Microwave Theory and Techniques*, Volume 41, Issue 12, Dec. 1993 Page(s):2256 – 2263.

[14] J. Obregon and F. Farzaneh, "Definition of nonlinear reflection coefficient of a microwave device using describing function formalism," *IEEE Trans. on Antennas and Propagation*, vol. 32, pp. 452{455, Apr. 1984.

[15] S.Wane, P.Philippe and P. Gamand "Low Power Unconditionally Stable Dynamic Amplitude Level Regulation Architecture", patent submitted on Sept. 2009.