Full Duplex Switched Ethernet for Next Generation "1553B"-based Applications

Ahlem Mifdaoui
Toulouse University
ENSICA
1 place Emile Blouin
31056 Toulouse, France
Ahlem.Mifdaoui@ensica.fr

Fabrice Frances
Toulouse University
ENSICA
1 place Emile Blouin
31056 Toulouse, France
Fabrice.Frances@ensica.fr

Christian Fraboul
Toulouse University
ENSEEIHT/IRIT
2 rue Charles Camichel
31071 Toulouse, France
Christian.Fraboul@enseeiht.fr

Abstract

Over the last thirty years, the MIL-STD 1553B data bus has been used in many embedded systems, like aircrafts, ships, missiles and satellites. However, the increasing number and complexity of interconnected subsystems lead to emerging needs for more communication bandwidth. Therefore, a new interconnection system is needed to overcome the limitations of the MIL-STD 1553B data bus. Among several high speed networks, Full Duplex Switched Ethernet is put forward here as an attractive candidate to replace the MIL-STD 1553B data bus. However, the key argument against Switched Ethernet lies in its non-deterministic behavior that makes it inadequate to deliver hard time-constrained communications. Hence, our primary objective in this paper is to achieve an accepted QoS level offered by Switched Ethernet, to support diverse "1553B"-based applications requirements. We evaluate the performance of traffic shaping techniques on Full Duplex Switched Ethernet with an adequate choice of service strategy in the switch, to guarantee the real-time constraints required by these specific 1553B-based applications.
An analytic study is conducted, using the Network Calculus *formalism, to evaluate the deterministic guarantees offered by our approach. Theoretical analysis are then investigated in the case of a realistic "1553B"-based application extracted from a real military aircraft network* [1]*. The results herein show the ability of profiled Full Duplex Switched Ethernet to satisfy 1553B-like real-time constraints.*

1. Introduction

The MIL-STD 1553B is a widely used avionic data bus that has been deployed in various military applications for decades [11]. It is a 1 Mbps command/response multiplexed data bus with a centralized system control. However, this traditional data bus is no longer effective in meeting the communication demands imposed by the next generation "1553B"-based applications. In fact, with this bus approach, communications are closely coupled to the bus controller, which limits system modularity and reconfigurability. Another limitation is its inability to handle the heavy throughput demands caused by the increasing subsystems' complexity. The need to support many simultaneous data flows also renders MIL-STD 1553B unsuitable for next generation applications. The current solution used to handle this problem consists in increasing the number of MIL-STD 1553B data buses and integrating dedicated data buses with higher rates compatible with the 1553B interface, like STANAG 3910 [8] or even other buses like SCI links [1], to support the important amount of exchanged information between subsystems. Using these solutions makes global interconnection system heterogeneous and complex. Moreover, real-time constraints guarantees are difficult to prove. Clearly, a new interconnection system is needed to fulfill these requirements.

Among several high speed networks, Switched Ethernet presents significant interests thanks to its reduced costs, its flexibility and its expandability. In fact, recently, an ARINC 664-compliant Full Duplex Switched Ethernet (AFDX) network [5] has been integrated into new generation civil aircrafts like the A380, to replace traditional ARINC-429 data buses. Thanks to policing mechanisms added in switches, this technology succeeds to support the important amount of exchanged data ([2, 6, 9, 10]). Therefore, after this successful civil experience, Standard Full Duplex Switched Ethernet is put forward here as a future interconnection technology to replace MIL-STD 1553B.

However, this COTS technology cannot be directly

[1] This work has been sponsored by a DGA/MRIS program

Proceedings of the 13th IEEE Real Time and
Embedded Technology and Applications Symposium(RTAS'07)
0-7695-2800-7/07 $20.00 © 2007 IEEE

deployed for time-critical applications where messages have to be delivered within a determined time limit. The use of switches and full duplex links eliminates collisions but this is not enough to prove that deadlines constraints for each traffic frame are effectively respected . In fact, the collision problem is shifted to congestions in the switches. This may occur when simultaneous traffic data attempt to share network segments and messages can be lost if switch queues overflow. Therefore, in order to use Full Duplex Switched Ethernet in ”1553B”-based applications, an additional mechanism is needed to avoid information loss and to guarantee a real-time behavior with low latency. Various real-time communication solutions were offered for the CSMA/CD Ethernet. These approaches range from implementing a master-slave communication model over Ethernet (FTT-Ethernet [23]) to token passing (RETHER [26]) or TDMA ([14]) to schedule nodes access. In our previous work [18], these solutions were described and their adaptation and their applicability over Switched Ethernet were discussed. After a comparative study of their capacities to handle real-time constraints, the choice of traffic shaping approach was justified and first experiments were conducted.

This paper extends our previous works by giving a general analytical study to characterize ”1553B”- based applications and to replace the MIL-STD 1553B data bus by a reliable Full Duplex Switched Ethernet. First, a general network model is designed to describe traffic shapers implementation at data sources and to integrate switch service policies among those offered by common switch technology (FCFS, SP, WFQ). Then, delay bound analysis are conducted to investigate the validity of our general network model. This general analytical way is applied in the case of a realistic MIL-STD 1553B aircraft network to show our Ethernet proposal’s ability to provide deterministic transmission with bounded delays and guaranteed deadline constraints. Hence, the originality of this paper consists in the proposed reliable interconnection technology to support the increasing demands of next generation ”1553B”-based applications with reference to Switched Ethernet temporal analysis and use of theoretical tools like the Network Calculus [7, 12].

The paper is organized as follows. An overview of MIL-STD 1553B and a brief examination of data communication requirements for ”1553B”-based applications are presented in section 2. Section 3 surveys other work in the area and relates it to our work. Section 4 and Section 5 show our network model and the delay bounds analysis of traffic shaping approach with different service disciplines, respectively. Theoretical results obtained in our case study are then presented in section 6. Section 7 concludes the paper.

2 Background

2.1. An overview of MIL-STD 1553B

The MIL-STD 1553B is a 1 Mbps serial asynchronous data bus on which the messages are multiplexed among users. To initiate all messages, the bus required a centralized control bus [**?**]. Figure 1 shows an example of a MIL-STD 1553B data bus system. The Medium Access Control (MAC) mechanism is described as command / response time division multiplexing: the Bus Controller (BC) sends command messages at predetermined times to Remote Terminals (RT), to give them access to the bus. A special RT called Monitor (M) can receive and store every circulating message but cannot transmit information on the bus, its principal use is to verify data bus system performance.
The BC follows the instructions stored in a memory called

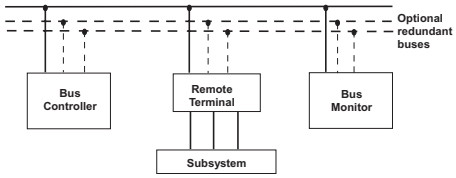

Figure 1. MIL-STD 1553 Architecture

transaction table to control communication and to monitor message requests. This table complexity depends on the number of RTs and the amount of data to be transferred; and several techniques have been developed to determine it. Thus, the BC’s operation is well ordered, pre-established and specific for each step necessary to achieve data.
The MIL-STD 1553B data bus can support different types of messages: periodic and sporadic with strict deadlines that must be respected in transmission. The polling cycle time must be carefully chosen since it must efficiently transfer all data, thus preventing any RT from being polled either too often or too little. The standard defines different types of messages formats and each format is divided into data communication messages and communication management messages. Each message uses only standardized word types that are described in [11].
Hence, the MIL-STD 1553B is suitable for applications where the generation and transfer of data are pre-established. It is a shared media network that supports precise timeliness in a deterministic way, however the application flexibility is reduced because a static transaction table is used to transmit information.

Proceedings of the 13th IEEE Real Time and
Embedded Technology and Applications Symposium(RTAS'07)
0-7695-2800-7/07 $20.00 © 2007 IEEE

2.2. "1553B"-based applications requirements

Prior to replace the MIL-STD 1553B data bus, the application requirements and performance criteria must be defined [24]. These requirements concern both technical aspects and costs.

Technical requirements are based on the timeliness and the accuracy of data which is critical for safety concerns. Therefore, the determinism of the data bus and a latency of information transmission that respects the deadlines constraints are both very important. Moreover, these applications need several classes of service and priority control with guaranteed qualities of service for each traffic class. In fact, in our "1553B"-based applications, there are four important categories of messages identified by their periodicity and their temporal deadlines:

- Urgent sporadic messages sent by the BC and that have to be received under a predefined small bounded time, like alarms.
- Periodic messages that depend on the time cycles defined by the BC and that are also hardly time-constrained, like sensor data.
- Sporadic messages that have known deadlines to respect but without any urgency.
- Sporadic messages that do not have to respect strict time constraints, like file transfers.

To fulfill real-time guarantees for these applications, a major frame is often defined to transfer all periodic messages at least once and it shall be no smaller than the biggest message period. Every major frame consists of a finite number of minor frames to meet the requirements of the higher update rate messages: at the beginning of each new minor frame, an interrupt occurs and the bus controller starts issuing the messages for that minor frame.

Costs requirements are also important since the choice of the data bus must be made with the goal of meeting the design requirements for the least amount of money. Therefore, commercial availability, expandability and maintainability are among the most important characteristics that the data bus should have.

Clearly, to design a new data bus for "1553B"-based applications, we have to guarantee deterministic information transmission with bounded latency that respect the real-time constraints (technical requirements) and with reduced costs (cost requirements), while the bandwidth may not be the primary design concern.

3 Related work

3.1. Replacing MIL-STD 1553B

To support the increasing demands of next generation "1553B"-based applications, various solutions were offered to replace the MIL-STD 1553B data bus. Some of these involve the development of dedicated architectures like the FDDN (Fiber Optic Data Distribution Network) [4] and others use commercial-off-the-shelf (COTS) technologies. This latter approach is an attractive solution to reduce costs and to add flexibility and expandability. However, among several COTS interconnection technologies, only few network products are expanding their application domain to replace MIL-STD 1553B data buses.

Parish and Briggs [22] suggested a communication architecture based upon ATM. By using 1553 emulation over ATM network, the coexistence of the two protocols is possible. However, the use of dedicated entities to connect 1553 remote terminals to an ATM network makes this solution complicated to adapt.

Fiber Channel (FC) [20] is also an interesting COTS product nominated by Murdock and Koenig. In their paper, they compare FC and MIL-STD 1553B characteristics and confirm that FC is easier to use since it does not need a bus loading analysis, nor a bus controller. However, the FC ability to guarantee deterministic transmission and deadline respect, required by the "1553B"-based applications, is still not validated.
Switched Ethernet is put forward in this paper as an attractive candidate to replace the MIL-STD 1553B data bus. In fact, this COTS technology is indisputably the most cost-effective solution: low price, component maturity and no special staff training is needed since all the network engineers perfectly know Switched Ethernet. Then, to achieve an accepted QoS level offered by Switched Ethernet in order to support next generation "1553B"- based applications requirements, the key of our solution is the use of traffic shapers at data sources to control traffic; and an adequate choice of switch service policy to guarantee the real time constraints of these critical applications. Note that today's switches like the recent Cisco [3] ones offer interesting features like advanced QoS. These switches implement Priority handling IEEE 802.1p to classify packets and can support processing up to four queues per output port. In addition, Cisco switches support FCFS, SP and WFQ scheduling.

3.2. Traffic shaping approach

Traffic Shaping approach has been initiated by Kweon and Shin [15] to achieve real-time communication over

Ethernet. The idea is that a smooth traffic, in which messages arrive at a constant rate, suffers less from collisions than a bursty traffic. Specifically, a traffic smoother is installed in every station between the Ethernet MAC layer and the UDP or TCP/IP layer: first it gives real-time (RT) packets priority over non real-time (NRT) packets, second it smooths the NRT-stream to reduce collision with RT-packets from the other nodes. Real-time traffic is not smoothed and is sent as soon as it arrives. This approach provides statistical guarantees which is not sufficient for hard real-time systems like the "1553B"-based applications.

Unlike this approach where only the non real-time traffic is smoothed, the Traffic Shaping approach developed by Loeser and Haertig [17] is based on the fact that all the incoming traffic has to be controlled in order to guarantee some deterministic performances of the network. They show in experiments, in the special case of Fast and Gigabit Switched Ethernet, that transmission without packet loss could be guaranteed when using the Traffic Shaping. However, this guarantee do not fulfill the "1553B"-based applications requirements and specially the deadline constraints.

This last approach presents a similarity with the one suggested in this paper, which consists on the use of traffic shapers at data sources to control traffic and to guarantee the integrity of the "1553B"-based applications. However, we will add a priority handling method in data sources and in the switch to assure a good isolation level for urgent messages with hard deadline constraints. Then, an adequate choice of service policy in the switch is needed to guarantee low bounded delays. Finally, we show the validity of our proposal to achieve deterministic communications in the case of a realistic "1553B"-based applications.

4 Network modeling

4.1. Traffic model

In our model, in order to integrate the different characteristics of the traffic generated by the "1553B"-based applications, four parameters (T, D, L, P) are defined for each traffic stream:

- The periodicity T: for a periodic message, it is the period and for a sporadic message, it is low bounded as its minimal inter-arrival time.
- The temporal local deadline D: (the message life duration) it is the period for a periodic message and the maximal response time for a sporadic message.
- The length L: the maximal length of a message
- The priority level P: We attribute a priority level, that is determined by the real-time requirements of the information, to each traffic category described in 2.2 . As a result, we define four priorities: alarms will be tagged with the highest priority (4), then periodic traffic the medium priority (3), and the lowest priorities (2 and 1) for the asynchronous messages of the two last categories. Therefore, P is a natural in $\{1, 2, 3, 4\}$.

4.2. Traffic shapers implementation

The traffic shaping idea is that reliable transmission with bounded delays is possible when there is a traffic control at data sources. Each subsystem has to control its streams in accordance with their periodicity and their packet's maximal length. The traffic shaper regulates a packet stream using a leaky bucket concept characterized by a maximal size b and a rate r carefully chosen for each stream. At the output of the traffic shaper, the maximal transmitted burst size is less than b and data leave with a rate r.

For each traffic shaper, a traffic shaping interval T is defined: once the bucket gets empty, the next amount of data is generated not earlier than T. So, the bucket must hold at least the amount of data $r * T$ that can arrive during T time units. To guarantee the integrity of the traffic characteristics on the MIL-STD 1553B, we consider for each stream a leaky bucket characterized by its maximal size L and its rate L/T in order to have one packet of size L per period T.

We model a terminal that transmits n flows as shown in Figure 2. Since there are multiple transmitted flows to different destinations, we need to put one traffic shaper per flow. Then, these flows are multiplexed inside the terminal before sending them on the data bus. The multiplexer characteristics in the terminal output determine the processing policy and in our approach only FCFS and SP policies are considered.

- FCFS policy is used in sources when the scheduling policy at the switch is also FCFS.
- SP policy is used to integrate each flow priority level at data sources, when the scheduling policy at the switch is SP or WFQ.

4.3. Switch policies and model

An Ethernet switch is an active device that identifies the destination port of an incoming packet and relays it to the specific port [19]. If multiple packets have the same

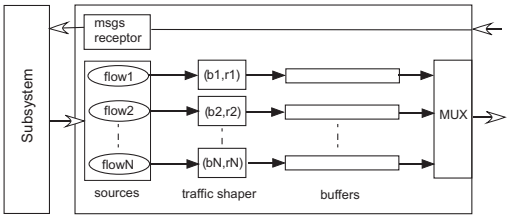

Figure 2. Model of traffic shaping in a terminal

destination port, buffers are used to resolve the problem of collision however frames are lost when buffers overflow. Ethernet switches can be identified by their switching technique and their scheduling policy.

First, two types of switching techniques are currently implemented in Ethernet switches: *Cut Through* and *Store and Forward*. With the first, only the header of each packet is decoded to determine its destination port and the rest is forwarded without any error checking mechanism. With the latter, the switch waits until the complete reception of the packet and forwards it to the destination port if it is successfully verified. In our model, we choose the second switching technique for safety reasons since no corrupted packet will be forwarded. Then comes the scheduling policy which will be used to forward packets at the switch output port. We have focused on the three most widely implemented policies: First Come First Served (FCFS), Static Priority (SP) and Weighted Fair Queuing (WFQ); and this is to guarantee the lowest bounded delays.

- FCFS is the simplest policy. Packets are served in their arrival order without taking into account their temporal characteristics and mainly their deadlines, which can cause real-time constraints violations.

- Using SP, packets are queued and forwarded according to their priorities. So, a queue is selected for transmission if all traffic classes queues with higher priority are empty at the time of selection; and for a given queue, the scheduling order is FCFS with a non-preemptive manner. In our study, the 802.1p priority model [19] which defines a 3 bits priority field in the extended Ethernet frame (8 priority levels), is used to manipulate the four priority classes defined in section 4.1. Starvation for the lowest priority queues represents the main SP policy drawback.

- With WFQ, a fair service is guaranteed for each queue. In fact, a weight is attributed to each queue to determine its associated bandwidth. The WFQ algorithm is based on the computation of a virtual finish time of service with the fluid GPS model ([21]), which depends only on the service share weight and the packet length. This virtual finish time is tagged into the packet and the scheduler selects the packet with the lowest finish tag to be transmitted. Delays with WFQ can be longer than with GPS, however WFQ offers the same properties as GPS, like fairness and flexibility. In our case, weights are associated to every priority class by taking into account their temporal deadlines. Therefore, four queues are defined to serve in switch output ports: one for each priority class.

The Ethernet switch used for our study is modeled as follows (figure 3): buffers in the input ports to represent the Store and Forward mode, then a filtering and relaying processor, and finally a multiplexer with four queues in each output port to send the multiplexed flow to the destination with a determined scheduling strategy.

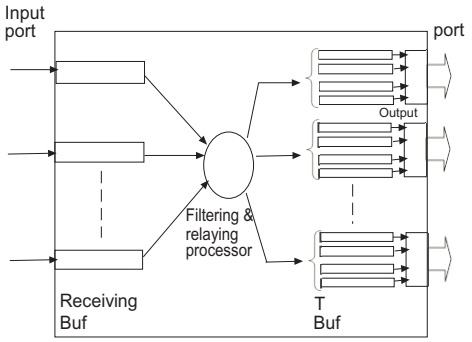

Figure 3. Model of frame transmission in an Ethernet Switch

5 Delay bound analysis

To investigate the validity of our network model and its efficiency to support the "1553B"-based applications requirements, the main metric that has been chosen is the end to end delay. To evaluate the QoS level offered by our suggested network, the maximal end to end delay bounds will be compared to the temporal deadlines of each priority class of traffic. To achieve this aim, we have chosen to conduct analytic studies instead of simulations, which are commonly used to validate models. In fact, simulations cannot cover the entire domain of the model applicability and specially rare events that represents worst-case functioning. Moreover, these latter are always conducted with a given confidence level always less than 100 percent. So, clearly, simulations cannot provide the deterministic guarantees required by our critical application, where a

failure might have a disastrous consequence on our system.

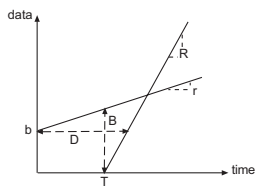

Figure 4. Computation of buffer and delay bounds

Our analytic study is based on the use of *Network Calculus* theory, introduced by Cruz [25] and developed in a neater way by Leboudec [16], because it is well adapted to controlled traffic sources and provides deterministic end-to-end delay bounds. This formalism differs from traditional queuing theories in the model of the traffic entering the network. In fact, instead of using a stochastic process for the entering traffic, the compliance to some *regularity constraints* is enough to model the traffic. These constraints limit traffic burstiness in the network. Delay and queue size bounds depend on the traffic arrival described by the so called *arrival curve* α, and on the availability of the traversed node described by a *service curve* β [16]. As shown in Figure 4, the packet delay D is bounded by the horizontal distance between α and β whereas the queue size B is bounded by the vertical distance. The calculation of these bounds is greatly simplified in the case of affine curves. In fact, the most used curves are: the leaky bucket arrival curve $\alpha(t) = b + rt$ with b the maximal burst and r the rate (we say that the flow is (b, r)-constrained); and the rate latency service curve $\beta(t) = \max(0, R(t - T))$ with latency T and rate R. Bounds in this case are simply $\frac{b}{R} + T$ for delay bound and $b + r * T$ for queue size bound. Finally, there is an important theorem that describes the burstiness constraint evolution for each flow: considering a flow that passes through a node with an input arrival curve b_{in} and a finite crossing delay D, the output flow is constrained by b_{out} with $b_{out}(t) = b_{in}(t + D)$.

5.1. Definition of the end-to-end delay bound

The end to end delay communication bound of a given packet or a traffic class, when crossing one switch, can be defined as follow (figure 5):

$$D_{EED} = D_{SRC} + D_{SW} + 2 * D_{PROP}$$

- D_{SRC} is the processing delay for transmission at the source and it depends in the multiplexer policy in the source station.

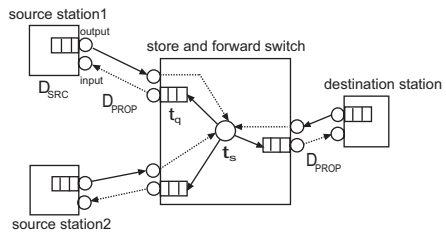

Figure 5. Schematic diagram of the end to end communication delay

- D_{SW} is the duration a frame might be delayed in the switch and is equal to the technological switch relaying latency (t_s) plus the queuing delay (t_q). The latter bound represents the time a queued frame sits in the queue of the switch output port, including the time needed to be emitted on the output cable. D_{SW} depends on the scheduling policy used in the switch and an exhaustive calculus of this bound is given later.

- D_{PROP} is the propagation delay needed to propagate the electrical signal from the source to the switch and then from the switch to the destination, which is proportional to the length of cable connecting the station to the switch. In our model, this delay is considered as insignificant.

5.2. Source processing delay

In this part, we explain the source processing delay calculation D_{SRC}. We consider a subsystem that sends a streams set $S = \{s_1, s_2, ..., s_n\}$ with an output capacity C. Each stream s_i is (b_i, r_i)-constrained thanks to the use of traffic shapers based on the leaky bucket concept. Moreover, $\sum_i r_i < C$ is assorted as a stability condition.

In our subsystem model (see figure 2), the multiplexer characteristics determine the processing policy in the subsystem output. Hence, for a FCFS policy, we choose a FCFS multiplexer and for a SP policy, a 4-FCFS multiplexer (one queue per priority level). To obtain the processing delay bounds, we use theorems founded by Cruz ([25]) for these respective multiplexer behaviors.

- *FCFS policy*: the following theorem gives an upper bound on delay for an FCFS multiplexer.

  Theorem 1 *Considering two streams* $\{1, 2\}$ *with* $\{C_1, C_2\}$ *the respective input capacities and* $\{\alpha_1, \alpha_2\}$ *the respective arrival curves, the delay of any data bit entering FCFS multiplexer with an output capacity* C

Proceedings of the 13th IEEE Real Time and
Embedded Technology and Applications Symposium(RTAS'07)
0-7695-2800-7/07 $20.00 © 2007 IEEE

from stream 1 *is upper bounded by* D_1*, where:*

$$D_1 = \frac{1}{C} \max_{u \leq 0} \{\alpha_1(u) + \alpha_2(u + \frac{L_2}{C_2}) - Cu)\}$$

With L_2 *the maximal packet length in stream* 2.

In our case study, all input multiplexer's links have infinite transmission rate thanks to the use of buffers in our subsystem model. In fact, according to Cruz ([25]), buffers are characterized by an infinite exit transmission rate . Hence, the term $\frac{L_2}{C_2}$ is null and the generalization of the precedent theorem for n streams with affine arrival curves gives an upper bounded delay D for any stream s_i, where:

$$D = \frac{1}{C} \max_{u \leq 0} \{\sum_i b_i + (\sum_i r_i - C) * u\} \quad (1)$$

Given that $\sum_i r_i < C$, it is easily verified that $u = 0$ is the argument of the maximum in the definition of D. Consequently, the processing delay for each stream s_i has a maximal bound $D_{SRC} = \frac{\sum_i b_i}{C}$ that depends on the burstiness of each stream and the output capacity. This bound causes a burstiness increase at the output of the subsystem. In fact, each stream s_i is (b_i^*, r_i)-constrained at the source output with $b_i^* = b_i + r_i * D_{SRC}$.

- *SP policy*: Cruz gives in ([25]) a theorem to calculate the maximal delay for a non preemptive priority multiplexer.

  Theorem 2 *Suppose there are* n *input links to this multiplexer with* α_1, α_2,...,α_n *the* n *respective arrival curves for the input traffic. Assume that stream* 1 *has the highest priority and stream* n *the lowest one and all streams have the same maximal packet length* L*. If each stream* i *is* (b_i, r_i)*-constrained for* $i = 1..n$*, the maximal delay is:*

$$D_i = \frac{\sum_{j=1..i} b_i + L}{C - \sum_{j=1..i-1} r_i}$$

In our case study, the considered streams set is $S = \{S_1, S_2, S_3, S_4\}$ with S_k the streams subset having the priority k. Each priority class k is (B_k, R_k)-constrained where $B_k = \sum_{i \in S_k} b_i$ and $R_k = \sum_{i \in S_k} r_i$ and L_k is the maximal packet length in S_k. Hence, the maximal processing delay for each priority k is:

$$D_{SRC}^k = \frac{\sum_{i \geq k} B_i + \max_{i<k} L_i}{C - \sum_{i>k} R_i} \quad (2)$$

5.3. Switch queuing delay

As said before (5.1), $D_{SW} = t_s + t_q$, where t_s is the technological delay and t_q the queuing delay. In general, t_s is given by the industrials and it depends on the switch capacity C (at 10 Mbps, t_s is about 60μs). In this part, we focus on the switch queuing delay bound t_q that depends mainly on the scheduling policy. Hence, these bounds for each flow are analyzed according to whether the policy of the node is FCFS, SP or WFQ. First, we determine the service curve offered to each flow by the part of the switch that represents the final stage of the forwarding mechanism: the queuing and the multiplexing. Then, giving the service curve and the input traffic arrival curve, maximal queuing delay bounds are calculated using the *Network Calculus* formalism. The considered streams set destined to a given switch output port is $E = \{e_1, e_2, ..., e_n\}$. Each stream e_i is (b_i^*, r_i)-constrained where $b_i^* = b_i + r_i * D_{SRC}$ and D_{SRC} its respective source processing delay.

- **First Come First Served policy**
  In the FCFS policy, the queuing delay depends mainly on the queue length. The input arrival curve of the global traffic is $\alpha(t) = \sigma + \rho t$ where $\sigma = \sum_i b_i^*$ and $\rho = \sum_i r_i$ and the service curve offered to this aggregate traffic is simply $\beta(t) = Ct$. Hence, the delay bound is the maximal horizontal deviation between α and β, i.e $\frac{\sigma}{C}$.

- **Static Priority policy**
  In the SP policy, the offered guarantees depend on the priority level. In our case, we have four priorities and the considered stream set $E = \{E_1, E_2, E_3, E_4\}$ with E_k the streams subset having the priority k. Each traffic priority class k has an arrival curve $\alpha_k(t) = \sigma_k + \rho_k * t$, where $\sigma_k = \sum_{i \in E_k} b_i^*$ and $\rho_k = \sum_{i \in E_k} r_i$. The strict priority policy guarantees to a given priority level to be selected before the lower priorities and after the higher priorities. However, since the transmission of a packet on the network cannot be preempted, in the worst case, one packet of maximal length with lower priority is served before. The maximum packet length belonging to a priority k will be noted $L_{k,max}$.
  Therefore, the service curve offered to the traffic class with priority k is given by the rate latency curve

$$\beta_k(t) = R_k(t - T_k) \quad (3)$$

  Where $R_k = C - \sum_{i \geq k} \rho_i$ the offered rate to the priority k after serving all the higher priorities; and $T_k = \frac{max_{i<k} L_{i,max}}{C}$ the maximal waiting time when a packet with lower priority is served before. Hence, the maximal horizontal deviation between α_k and β_k

is $\frac{\sigma_k}{R_k} + T_k$ which is the maximal delay bound for the priority k.

- **Weighted Fair Queuing policy**
  As said before in 4.3, with WFQ, weights are associated to each priority level and not as known classically to each individual stream. In fact, it is more interesting in our case to offer a fair service to each priority level that respects its deadline constraints and does not depend on the properties of the other priorities. Hence, an appropriate weight ϕ_k that respects the stability condition $\sum_k \phi_k = 1$ is considered for each priority level k. As bellowed, each traffic priority class k has the arrival curve $\alpha_k(t) = \sigma_k + \rho_k * t$. To determine the service curve offered by the WFQ node for each priority level k in our case study, the Leboudec's result [16] concerning the service curve offered by a GPS node (the fluid model of WFQ) is used. Assume a (σ, ρ)- constrained stream with a weight ϕ entering a GPS node with an output capacity C, the associated service curve is $\beta(t) = rt$ where $r = \phi * C$. In the other hand, the Parekh's and Gallager's result [21] on the deviation between the delay bound under GPS and the delay bound under WFQ is utilized to make the link between the GPS and the WFQ service curves. This deviation is less than $\frac{L_{max}}{C}$ which represents the time to send a packet of maximal length under WFQ.
  Hence, using these results, we derive the researched service curve for each traffic priority class k that is:

$$\beta_k(t) = c_k(t + \frac{L_{k,max}}{C}) \quad (4)$$

  Where $c_k = \phi_k * C$. The maximal delay bound for each priority k with WFQ policy is then $\frac{\sigma_k}{c_k} + \frac{L_{k,max}}{C}$ which is the maximal horizontal deviation between α_k and β_k.

6 Performance evaluation

6.1. Case study

Our case study is a representative real-time traffic on a MIL-STD 1553B data bus in a modern french military aircraft. The selected data bus is the busiest one among those aboard this aircraft. Hence, we estimate that it is the most representative one of the MIL-STD 1553B behavior and its real-time requirements. For these reasons, this single case study is considered in this part.

The traffic is circulating between twenty subsystems connected to their associated terminals. The transaction table of the MIL-STD 1553B bus is statically defined in such a way that time constraints are enforced and terminals

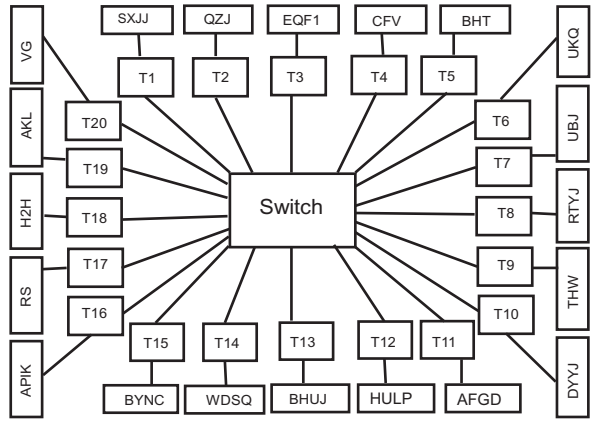

Figure 6. General model based on a real case of a 1553B network

are polled in a determined sequence. As opposed to this transmission control approach, Switched Ethernet with traffic shaping approach is based on the fact that equipments can emit their data simultaneously when the traffic is well controlled. Real-time flows are described in tables 1 and 2. So, one can see that for periodic messages, the largest period is about 160 ms and the most frequent value is 20 ms; and for sporadic messages, there are different response time bounds and the most urgent one is about 3 ms.

As a result, the major frame has a duration of 160 ms and minor frames 20 ms, in order to meet the requirements of the higher update rate messages. For each message, we define a deadline that conforms to our model (see 4.1): for periodic messages, the deadline is the period that ranges between 20 ms and 160 ms; and for sporadic messages their maximal response time. We suppose that a subsystem can generate at most one sporadic message of each type once every minor frame (20 ms). Therefore, the hardest real-time constraint to respect is the maximal response time for the most urgent sporadic messages (3 ms).

Table 1. Periodic Flow Description

Period (ms)	Number of flows	L_{max}(bytes)
20	40	110
40	10	76
80	15	120
160	100	116

In order to integrate the above traffic in a simple manner when replacing the MIL-STD 1553B data bus with a Full Duplex Switched Ethernet network, a MAC address is

Table 2. Sporadic Flow Description

Response time (ms)	Number of flows	L_{max}(bytes)
3	1	72
20	80	120
160	90	120
infinity	20	120

attributed to each terminal and the different terminals are connected to one switch with a 10 Mbps capacity. Every 1553 message generated by a 1553 terminal is encapsulated in an Ethernet frame that respects the minimal frame size (64 bytes) and contains the source and destination addresses. Then, this frame is carried over the Switched Ethernet network. Figure 6 depicts our general model: a switch in the middle is connected to twenty terminals that transmit periodic and sporadic messages with determined characteristics.

To validate our proposal, the maximal end to end delay bounds are calculated for each traffic class using the analysis in section 5, and then compared to the associated deadline. The obtained results are essential to show the efficiency of Switched Ethernet to guarantee deterministic transmission with bounded delays required by "1553B"-based applications.

6.2. Analytical delay bounds

In order to calculate the analytical maximal end to end delay bounds, we have developed a Java computing tool based on our general model. Given the traffic characteristics and the network architecture model in the input, this software determines the arrival curve of each stream at every point of the network; and the service curve offered by each network component according to its processing policy. Afterward, it gives the maximal delay bounds that represents the horizontal distance between these two curves. A maximal end to end delay bound can then be determined. This tool works as described in the followed algorithm 1.

In our case study, given the important number of streams and the existence of multicast and broadcast transmission modes, it was more convenient to give a maximal end-to-end delay bound related to each destination subsystem than to each individual stream. Hence, initially, the tool identifies the set of received streams at each terminal (line 6). Then, for each stream in the identified set, it determines its initial arrival curve (line 9), its associated path (line 10) and service curves offered by crossed components along that path according to their processing policy (line 11). Afterward, the delay bound calculation is propagated from one

Algorithme 1 End to end delay bounds calculus

1: $T \leftarrow \{T_1, T_2 ... T_{n_{terminals}}\}$
2: $S \leftarrow \{s_1, s_2 ... s_{n_{streams}}\}$
3: Policy $\in \{FCFS, SP, WFQ\}$
4: $EED_{DEST} \leftarrow$ NULL-VECTOR(T.length)
5: **for** $i = 1$ to $n_{terminals}$ **do**
6: $R \leftarrow$ Vector-rcv-streams(T_i, S)
7: $EDD_{streams} \leftarrow$ NULL-VECTOR ($R.length$)
8: **for** $j = 1$ to $R.length$ **do**
9: $\alpha \leftarrow$ Initial-arrival-curve($R(j)$)
10: Path $\leftarrow$ Vector-crossed-components($R(j)$)
11: $\beta \leftarrow$ Vector-service-curves(Path, Policy)
12: **for** $k = 1$ to Path.length **do**
13: $D \leftarrow$ Delay-calculus ($\alpha, \beta(k)$)
14: $\alpha \leftarrow$ Left-shift-curve (α, D)
15: $EED_{streams}(j) \leftarrow EED_{streams}(j) + D$
16: **end for**
17: **end for**
18: $EED_{DEST}(i) \leftarrow \max_{j \in R} EED_{streams}(j)$
19: **end for**

crossed component to another by resolving the burstiness constraint evolution of each stream. In fact, knowing the arrival curve and service curves, the submitted delay bound is calculated for each stream (line 13) and then its output arrival curve (line 14). This latter curve will be the input arrival curve for the next network component and so on until the last component. Now, since submitted delay bounds are known for each stream and in each point of the network, a maximal end-to-end delay bound can be determined for each stream along its path (line 15). Finally, the end to end delay bound associated to each destination terminal can be calculated as the maximal end to end delay bound among those associated to its set of received streams (line 18).

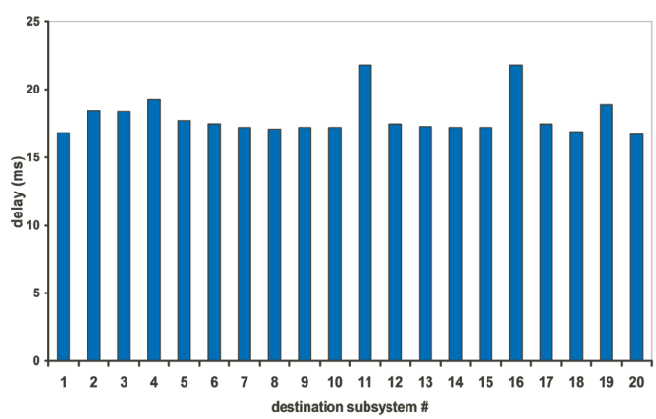

Figure 7. Analytic Maximal End to End Delay bounds with FCFS policy

Proceedings of the 13th IEEE Real Time and
Embedded Technology and Applications Symposium(RTAS'07)
0-7695-2800-7/07 $20.00 © 2007 IEEE

First, with the FCFS policy, the end-to-end delay bounds for each stream set, characterized by a destination subsystem, are computed and the obtained results are presented in Figure 7. Clearly, one can see that all end-to-end delay bounds are larger than 3 ms which means that the deadline constraint for the most urgent sporadic messages is violated. Moreover, traffic streams sent to subsystems 11 and 16 have an end to end delay bound larger than 20 ms. This value represents the smallest period for periodic flows and the response time of some sporadic flows. Hence, the deadline constraints associated to these flows are not respected. It is worth to note that this simple policy is the one used inside the switches of the AFDX network to support civil applications requirements, where one guaranteed latency to all traffic flows is provided; thus, real-time constraints required by this military application would be violated, despite the relative ratio between Switched Ethernet (10Mbps) and MIL-STD 1553B (1Mbps) and the low bus utilization (4%). Hence, the requirements of communication protocols are distinct in civil and military applications and the AFDX is not designed to support the deadline constraints required by the "1553B"-based applications. Moreover, as opposed to some received ideas, increasing the offered bandwidth is not sufficient to have a real-time behavior with Switched Ethernet.

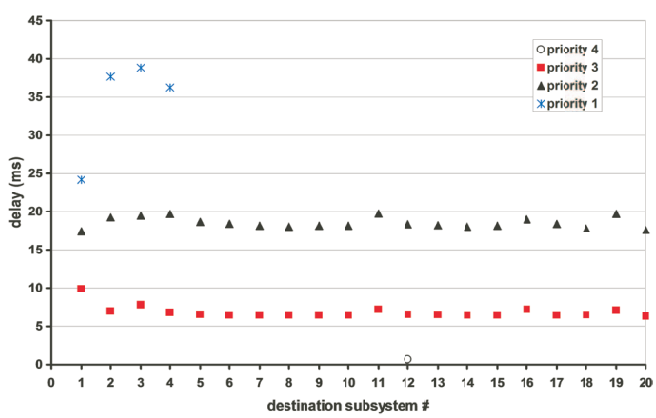

Figure 8. Analytic Maximal End to End Delay bounds with SP policy

In order to achieve the QoS level offered by Switched Ethernet, several service classes are required to assure a good isolation for urgent messages with hard deadline constraints. Hence, SP and WFQ policies are selected here to guarantee the priority handling in data sources and in the switch. The obtained results with SP and WFQ are respectively shown in figures 8 and 9. Clearly, the end to end delay bounds are inherently reduced for the most urgent traffic class (priority 4) and satisfy the associated deadline

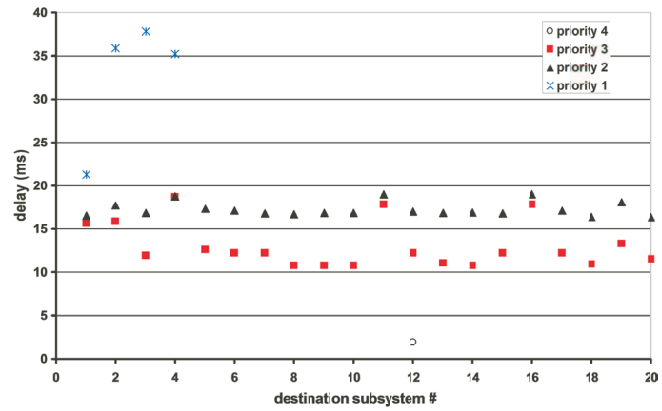

Figure 9. Analytic Maximal End to End Delay bounds with WFQ policy

constraint. Moreover, for each destination subsystem, the priority classes 3 and 4 have end to end delay bounds less than 20 ms which respect the hardest deadline constraint required by these two classes. Obviously, all delay bounds cannot improve and as a result low priorities delay bounds grow compared to the FCFS bounds.

To validate our network reliability in a general way, we suggest to determine maximal delay bounds in a global manner instead of maximal delay bounds related to subsystems. Hence, assume that each priority class k destined to a subsystem i has an end to end delay bound $D^k_{EED,i}$. The global maximal end to end delay bound associated to each priority k is then:

$$D^k_{EED} = \max_i D^k_{EED,i} \tag{5}$$

As a result, in our case study, the obtained global bounds are described in table 3 (for each traffic class, only the hardest deadline is considered which represents the smallest deadline of a traffic class).

Hence, one can see that deadline constraints are violated

Table 3. maximal end to end delay bounds

Priority	Hardest Deadline (ms)	D_{EED} (ms)		
		FCFS	SP	WFQ
4	3	21,8	0,63	1,9
3	20	21,8	9,8	18,6
2	20	21,8	19,7	19
1	infinity	21,8	38,8	37,8

with FCFS policy, whereas they are respected with SP and WFQ policies. On the other hand, with the SP policy, the maximal end to end delay bound of high priority is reduced compared to the FCFS policy, with a noticeable

Proceedings of the 13th IEEE Real Time and
Embedded Technology and Applications Symposium(RTAS'07)
0-7695-2800-7/07 $20.00 © 2007 IEEE

degradation of low priorities. Moreover, with the Weighted Fair Queuing policy, a more fair service is offered to all priority classes with a little amelioration of low priorities compared to SP policy. Clearly, this configurable policy bridges the gap between the simplest policy FCFS, that serves packets without taking into account their temporal characteristics and causes a real-time constraint violation in our real case application; and the SP policy that makes a strict segregation between priority levels by selecting the higher priority to be served.

These results show that the priority handling method combined with the traffic shaping approach may be a good mean to improve the Switched Ethernet reliability and to achieve the QoS level required by "1553B"-based applications.

7 Conclusion

We have shown, through this paper, that Full Duplex Switched Ethernet is an attractive candidate to replace the MIL-STD 1553B data bus in next generation "1553B"-based applications. To guarantee an acceptable real-time behavior of our suggested network, traffic shapers were integrated in data sources to assure the traffic control. Then, a priority handling method is added to have a good isolation level for urgent messages with hard deadlines. This was achieved by using SP and WFQ policies in the switch. Using the *Network Calculus* theory, an analytic study was conducted to calculate deterministic guarantees offered by our proposal in the case of a realistic military aircraft network. Obtained results show the efficiency of traffic shaping with SP and WFQ policies to provide deterministic transmission with respected deadline constraints, as required by next generation "1553B"-based applications, whereas a simpler policy like FCFS failed to provide these guarantees.

Currently, we are working on the delay bounds optimization obtained with the traffic shaping approach. Therefore, we are computing WFQ weights associated to each priority class in order to have better delay bounds for low priorities than the SP policy. This problem can be modeled as a multi-objective optimization problem where weights represent the set of variables; and deadline and priority constraints the set of constraints to be respected. This assumption will be proved and validated analytically.

The next step will be to evaluate other techniques, like the Time Triggered paradigm [13], over Full Duplex Switched Ethernet to achieve the real-time behavior required by "1553B" based applications. Then, their relative merits will be compared to Traffic Shaping approach developed in this paper.

References

[1] J. Bogaerts, A. Divia, R. Muller, H. Renardy, and J. Cern. SCI Based Data Acquisition Architectures. *IEEE Transactions on Nuclear Sciences*, 39:85–94, April 1992.

[2] H. Charara, J. Scharbarg, J. Ermont, and C. Fraboul. Methods for bounding end-to end delays on an AFDX network. Dresden, Germany, 2006. Proceedings of the 18th Euromicro Conference o n Real-Time Systems (ECRTS06).

[3] Cisco. Cisco switches.

[4] M. Cohn. A proposed Local Area Network for next-generation avionic systems. NAECON, 1988. Proceedings of Aerospace and Electronics Conference.

[5] A. E. E. Committee. Aircraft Data Network Part 1, Systems Concepts and Overview, ARINC Specification 664. Annapolis, Maryland, 2002. Aeronautical Radio.

[6] F. Frances, C. Fraboul, and J. Grieu. Using Network Calculus to optimize the AFDX Network. Toulouse, 2006. Proceedings of the 3rd European Congress Embedded Real Time Software.

[7] J. Georges, E. Rondeau, and T. Divoux. Evaluation of Switched Ethernet in an industrial context by using the Network Calculus. Vasteras, Sweeden, 2002. 4th IEEE International Workshop on Factory Communication Systems.

[8] A. Gillen and J. Shelton. Introduction of 3910 High Speed Data Bus. San Diego, CA, USA, 1992. Military Communications Conference, MILCOM.

[9] J. Grieu. *Analyse et valuation de techniques de commutation Ethernet pour l'interconnexion de systemes avioniques*. PhD thesis, INP, Toulouse, 2004.

[10] J. Grieu, F. Frances, and C. Fraboul. Preuve de determinisme d'un reseau embarque avionique. Montreal, Canada, 2003. Proceedings of Colloque Francophone sur l'Ingenierie des Protocoles.

[11] C. E. Incorporated. MIL-STD-1553 Designer guide. 1982.

[12] J. Jasperneite, P. Neumann, M. Theis, and K. Watson. Deterministic Real-Time Communication with Switched Ethernet. Vasteras, Sweeden, 2002. 4th IEEE International Workshop on Factory Communication Systems.

[13] H. Kopetz. The Time-Triggered Architecture. In *Proceedings of the First IEEE International Symposium on Object-Oriented Real-Time Distributed Computing*.

[14] H. Kopetz, A. Damn, C. Koza, M. Mulazzani, W. Schwabl, C. Senft, and R. Zainlinger. Distributed Fault-Tolerant Real-Time systems: the Mars Approach. IEEE Micro, february 1989.

[15] S.-K. Kweon and K. Shin. Achieving real-time communication over Ethernet with adaptive traffic smoothing. Washington, USA, 2000. IEEE real-time technology and applications Symposium.

[16] J. Leboudec and P. Thiran. *Network Calculus*. Springer Verlag LNCS volume 2050.

[17] J. Loeser and H. Haertig. Low latency hard real-time communication over switched Ethernet. IEEE, Proceedings of ECRTS'04.

[18] A. Mifdaoui, F. Frances, and C. Fraboul. Real-time guarantees on Full-Duplex Switched Ethernet for military applications. In *Proceedings of the 3rd European Congress Embedded Real Time Software*, Toulouse, France, 2006.

[19] M. Molle and G. Watson. 100Base-T/IEEE802.12/Packet Switching. *IEEE Communication Magazine*, 64-73, August 1996.

[20] J. R. Murdock and J. R. Koenig. Open Systems Avionics Network to replace MIL-STD 1553. *IEEE AESS Systems magazine*.

[21] A. Parekh and R. Gallager. A generalized processor sharing approach to flow control in integrated services networks: the single node case. *IEEE/ACM transactions on Networking*, 1, June 1993.

[22] D. Parish, R. Briggs, D. Chambers, C. Hunter, and N. Kelsall. 1553Emulation over ATM (Asynchronous Transfer Mode) A hybrid Avionics Communications Architecture. *IEEE AESS Systems magazine*.

[23] P. Pedreiras, L. Almeida, and P. Gai. The FTT-Ethernet Protocol : Merging Flexibility, Timeliness and Efficiency . Proceedings of ECRTS, 2002.

[24] L. Pinney. Joint Advanced Strike Technology Program, Avionics Architecture Definition. Arlington, VA, 1994.

[25] R.Cruz. A calculus for network delay, part 1 : network elements in isolation. *IEEE transactions on information theory*, 37, January 1991.

[26] C. Venkatramani and T. Chiueh. Supporting Real-Time Traffic on Ethernet. San Juan, Puerto Rico, 1994. IEEE real-time systems symposium.