View metadata, citation and similar papers at core.ac.uk
brought to you by CORE
provided by Institute of Transport Research:Publications

IAC-07-D2.7.09

Technical Assessments of Future European Space Transportation Options

Martin Sippel, Arnold van Foreest
Space Launcher Systems Analysis (SART), DLR, Cologne, Germany
Jean-Philippe Dutheil, Peter Philip***
**:TL3 Stage System Senior Expert and New Projects / **: TP21 Engine System New Projects*
EADS Astrium, (Bremen, Ottobrunn**), Germany*

The paper describes some of the most recent activities in Germany in the technical assessment of future European launcher architecture. In focus is a joint effort of DLR-SART with German launcher industry in the definition of a next generation upper-medium class expendable TSTO with an initial operational capability after 2020. Involved companies are EADS astrium and MT Aerospace. This DLR-agency funded study WOTAN investigates fully cryogenic launchers as well as those with a combination of solid and cryogenic stages, fulfilling a requirement of 5000 kg single payload into GTO. Solid strap-on boosters should allow both versions further payload growth capability.

In its second part the paper analyzes options for new liquid fuel upper stages to be put on the P80 solid first stage of the Vega small launcher. Versions with storable as well as cryogenic propellants are investigated in a preliminary launcher system lay-out and their technical viability is critically assessed.

Nomenclature

D	Drag	N
I_{sp}	(mass) specific Impulse	s (N s / kg)
L	Lift	N
M	Mach-number	-
T	Thrust	N
W	weight	N
g	gravity acceleration	m/s^2
m	mass	kg
q	dynamic pressure	Pa
v	velocity	m/s
α	angle of attack	-
γ	flight path angle	-

Subscripts, Abbreviations

AOA	Angle of Attack
AP	Ammonium Perchlorate
AVUM	Attitude and Vernier Module
CAD	Computer Aided Design
ELV	Expendable Launch Vehicle
GLOW	Gross Lift-Off Mass
HTPB	Hydroxyl Terminated Poly Butadiene
ISS	International Space Station
LEO	Low Earth Orbit
LH2	Liquid Hydrogen
LOX	Liquid Oxygen
MECO	Main Engine Cut Off
MR	Mixture Ratio
NPSP	Net Positive Suction Pressure
SRM	Solid Rocket Motor
SSME	Space Shuttle Main Engine
SSO	Sun Synchronous Orbit
TRL	Technology Readiness Level
TSTO	Two Stage to Orbit
VEGA	Vettore Europeo di Generazione Avanzata
VENUS	**VE**GA **N**ew **U**pper **S**tage
WOTAN	**W**irtschaftlichkeitsuntersuchungen für **O**rbital-**T**ransportlösungen von **A**riane **N**achfolge-trägern (Economic Assessment of Orbital Transportation Options of Ariane-Succeeding Launchers)
cog	center of gravity
sep	separation

1 INTRODUCTION

Currently, a broad investigation on the future European options in payload delivery to orbit is going on in different national and multi-national contexts. The range of interest reaches from potential adaptation and rearrangement of existing stages to complete new developments. Payload classes vary between small LEO and heavy GTO capabilities.

The paper describes some of the most recent activities in Germany in the technical assessment of future European launcher architecture. In focus is a joint effort of DLR-SART with German launcher industry in the definition of a next generation upper-medium class expendable TSTO with an initial operational capability after 2020. Involved companies are EADS-Astrium and MT Aerospace. This DLR-agency funded study WOTAN investigates fully cryogenic launchers as well as those with a combination of solid and cryogenic stages, fulfilling a requirement of 5000 kg single payload into GTO. Solid strap-on boosters should allow both versions further payload growth capability.

Advanced upper-stage technologies are one of the primary German investigation areas. These technologies could not only be applied to the above mentioned TSTO but also to a potential upgrade of the Vega small launcher. In its second part the paper analyzes options for new liquid fuel upper stages to be put on the P80 solid booster or Z-23 solid second stage. Versions with storable as well as cryogenic propellants are investigated

Copyright © 2007 by DLR-SART. Published by the American Institute of Aeronautics and Astronautics, Inc. with permission. Released to IAF/IAA/AIAA to publish in all forms.

in a preliminary launcher system lay-out and their technical viability is critically assessed. Another joint DLR-SART – launcher industry study dubbed VENUS will focus on some promising upper stages.

Note that all presented launcher concepts are under investigation to obtain a better understanding of future ELV options. For none of the launchers, even the most promising ones, currently a development decision is implicated.

2 STUDY LOGIC, CONSTRAINTS, AND MARGIN POLICY

2.1 Initialization of launcher concept choices

The WOTAN launcher architecture study [1] is investigating expendable fully cryogenic (LOX/LH2) TSTO name-coded “K” and solid 1st stage / cryogenic 2nd stage TSTO combinations name-coded “F”. The possibility to increase GTO and LEO performance by means of added solid Strap-On-Boosters is highlighted by an additional "+"-sign.

In the launcher definition process it is tried to use as few liquid engines as possible, while on the other side remaining in a high-thrust range accessible with reasonable technological extension from current and past European high-thrust liquid engines. That drove to the initial choice of a 2-engine 1st stage for the “K” configuration and a single engine 2nd stage for both “K” and “F” configurations. For the full cryogenic version, 3 different technologies for first stage high-thrust engines have been considered, in relation with their expected production cost (see section 3.1 below).

Figure 1 summarizes the different options which are initially considered, and provides the corresponding nomenclature.

Launcher version	K1	K2	K3	K+	F	F+
Upper-Section	Single P/L	Single P/L	Single P/L	Single P/L	Single P/L	Single P/L
2. Stufe	"Expander cycle" Engine LOx/LH2	"Expander cycle" Engine LOx/LH2	"Expander cycle" Engine LOx/LH2	Analogue to K1, or K2, or K3	"Expander cycle" or "Gas-Generator cycle" Engine LOx/LH2	Analogue to F
1. Stufe	LOx/LH2 Engine "low-cost"	LOx/LH2 Engine GG Techno	LOx/LH2 Engine "high perfo"	Analogue to K1, or K2, or K3	Solid mototr	analogue F
Booster	No	No	No	Yes, Solid	No	Yes, Solid

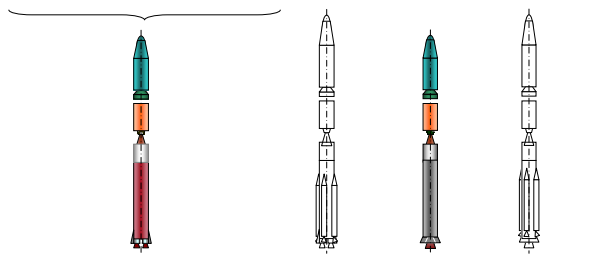

General launcher concept architecture considered

General lay-out for 1st stage and booster engines

Figure 1: General concept definition of WOTAN launchers

2.2 Overview of study logic

The reference mission is the GTO-launch from the European Space-Port of Kourou (French Guyana), for a single payload injection of 5 metric tons. The obtained size of the two stages is then kept fixed and the propellant loading of the 6 solid-Strap-On-Boosters is defined in order to reach the augmented-performance aiming at 8 metric tons in GTO.

The launch-vehicle performance and geometrical architecture is consolidated in a following step by performing pre-concept studies of stages and engines. The main goal is to elaborate the essential functional architecture of the different stages, perform a pre-dimensioning of the main sub-systems in order to elaborate realistic mass and performance characteristics. The main driver for defining the technical functional architecture, and the structural concept definition, is to look for the cheapest solutions, allowing some detrimental performance impact when the "bargain" seems worth at that conceptual step.

Obtained mass and propulsive characteristics are then used for verifying the initial performance and adjusting the launcher staging as far as necessary. In case of severe divergence, more advanced technological solutions may have to be re-introduced for reaching the payload GTO target while keeping the launch vehicle take-off mass within a reasonable value.

A final stage and launcher pre-concept is then foreseen as the last step of the study (in 2008) on basis of this intermediate revision of the staging and eventually of some technological choices.

2.3 Establishment of main inputs

Basic technical inputs have been elaborated concerning the stages mass and propulsive essential characteristics (representing credible assumptions at that step), in relation with the initial launcher architecture presented before, together with experience-based aerodynamic drag coefficients.

Those basic launcher stages technical inputs for the initial staging analysis are essentially:

- the structure dry-mass index, depending on stage technology, and the upper-section mass estimate,
- the fluid residuals, including an assessment of performance reserve when needed,
- the solid propellant residuals estimate (when this propulsion technology is used),
- the engine / motor specific impulse, linked of course with a nozzle expansion ratio,
- a relation between engine dry mass and thrust level, depending on chosen technology.

A set of concept margin data has also been introduced, in order to cover initial uncertainty linked to the determination of above basic inputs. This is aiming at making the approach more realistic and therefore usable for a later assessment of the affordable level of technology that can be envisaged for such TSTO ELV (this level of technology is linked to the level of margin

that is introduced in association with the reference data for the basic technical input).

Trajectory constraints are also introduced in addition to the technical stage basic inputs. They concern the minimum thrust-to-weight ratio at take off, the maximum longitudinal acceleration during flight, the maximum dynamic pressure, and the maximum aero-thermal flux after fairing separation. The separated stages fall-back point is considered in a simplified way, by checking the falling point position only after trajectory calculation, as it does not represent a critical issue due to the favorable position of Kourou Spaceport.

After realization of the initial performance and staging analysis, the set of basic technical inputs will be updated and replaced by the results of engines and stages pre-concept definition. The set of margin data will also be replaced by uncertainties estimate, linked to the pre-concept definition process and simplifications.

The maximum diameter of the stages (and the fairing) has been fixed at 5.4 m in order to allow the re-use of Ariane 5 manufacturing and procurement assets. The needed under-fairing volume for the payload is similar to AR5 for a single launch, so the same fairing volume and shape has been used (same class of payload, similar aerodynamics).

For the 2nd stage a design with separated fuel and oxidizer propellant tanks is preferred in order to have a concept which facilitates the performance of versatile missions when requiring multiple re-ignitions (as scientific missions, GTO+, or even GEO). The 2nd stage diameter is then chosen by compromising between minimum length, structural mass minimization (impact of geometrical aspect ratio) and feasibility of tanks at lower cost.

3 NEXT GENERATION EXPENDABLE MEDIUM-LIFT TSTO OPTIONS

Subject of the WOTAN study are options for next generation expendable TSTO launchers fully based on European technology. In a first step SART performs an iterative pre-design and sizing of engines, solid motors and launchers based on similar assumptions. Preliminary data, documented in [5], allow a down selection on a few most promising configurations. For these launcher variants a mechanical architecture and subsequent structural analysis will be carried out by industry. Design results will be checked on cost and performance before initiating a second iteration loop.

3.1 Preliminary Sizing and Configuration Trade-Offs

Different cycle complexities of high thrust liquid rocket engines and large solid motors in the first stage are looked upon. The following nomenclature applies:

- K1 ‘low-cost’ gas-generator cycle engine with low chamber pressure (8 MPa) and film cooled or potentially ablatively cooled nozzle,
- K2 conventional, Vulcain-type gas-generator cycle engine with medium chamber pressure (11.5 MPa) and regeneratively cooled thrust chamber,
- K3 high performance staged combustion cycle engine with relatively high chamber pressure (15 to 16 MPa) and regeneratively cooled thrust chamber,
- F advanced high-pressure, high propellant loading solid rocket motor.

An early exploratory analysis assumed a similar cryogenic upper stage for all configurations; all based on the Vinci with 180 kN vacuum thrust. The available thrust level limits the upper stage propellant loading. A preliminary value of 30.6 Mg nominal LOX and LH2 is selected.

The fixed upper stage conditions allow exploring the optimum expansion ratios for the different first stage engine cycles. Further, the approximate size of the first stages and hence of the launcher variants has been determined for the GTO reference payload requirement.

For all investigated TSTO a converging arrangement could be found which achieved the required 5000 kg separated GTO-payload with some margin in a configuration without any additional booster support. Although most assumptions were still preliminary, some interesting tendencies could be revealed which allowed a first down-selection:

- Due to limited I_{sp} of K1 the overall dimensions of the first stage and its engines reached outsize conditions with a total length of more than 80 m. Thus, serious doubts exists that such a design is economically viable, even assuming considerably lower costs on the propulsion system compared to conventional engines. Therefore, the K1-type launcher has been eliminated from further WOTAN investigations.
- K2 and K3 showed relatively minor size and weight differences with a slight edge for the technologically more demanding staged combustion K3. Thus, it has been decided to raise the K3 chamber pressure to 16 MPa, to correspondingly adapt the expansion ratio, and to investigate the system impact if its chamber mixture ratio is increased up to K2 main chamber MR values.
- Stage structural indices and margin assumptions were harmonized between DLR-SART and industry before entering the next iteration cycle. The enhanced performance WOTAN+ launchers should use six strap-on boosters each to achieve the required 8000 kg payload to GTO.
- Upper stage nominal propellant loading should be adapted for the different launcher first stages to reach the minimum take-off mass in each case.

3.2 Preliminary Launcher Sizing

This second sizing analysis is performed for the K2 Vulcain-type gas-generator cycle engine, different variants of the K3 high performance staged combustion cycle engine, and two different versions of the solid motor first stage. The launcher sizes are iteratively found

in combination of mass estimation and trajectory simulation.

For each launcher two preliminary aerodynamic data sets are generated with the DLR tool CAC [2]. The one set is for the clean TSTO configuration, the other one considers additional six smaller strap-on boosters.

3.2.1 Fully cryogenic launchers' first stage engines

The characteristic performance of the first stage engines are preliminarily estimated in a close iteration between launcher dimensioning and engine cycle analyses at DLR-SART. The mass flow is determined by the minimum lift-off T/W-requirement of 1.3. The staged combustion engine mixture ratio has been varied in the range 6 to 6.7. The former is identical to that of the gas generator type while the latter has the same combustion chamber MR as the gas generator main chamber. Such an increased value is still below that of today's Vulcain 2 and well mastered in Europe according to EADS astrium.

Note that the I_{sp} as used in all trajectory optimizations takes into account a propulsion margin of -1 % with respect to the data provided in Table 1. The mass flow is accordingly raised to fulfill the thrust requirement.

The specific impulse of the different staged combustion variants is slightly decreasing with increased mixture ratio because the maximum is found for an MR around 5. It could be argued that the variants should be designed with changing nozzle expansion ratio for reaching the same exit pressure. In that case the K3 vacuum I_{sp} of all variants would remain almost constant between 440 and 442 s.

Table 1: Calculated characteristic performance data of cryogenic first stage engine options

		WOTAN K2 GG engine	WOTAN K3-46 staged combustion engine		
total engine mixture ratio	-	**6**	**6**	**6.35**	**6.7**
sea level thrust	kN	2196.2	1919.3	1934.5	1945.4
vacuum thrust	kN	2635	2265	2280	2290
sea level spec. impulse	s	352.34	376.35	375.41	374.12
vacuum spec. impulse	s	422.74	444.14	442.46	440.39
chamber pressure	bar	115	160	160	160
total engine mass flow	kg/s	635.61	520.03	525.46	530.25
chamber mixture ratio	-	6.72	6	6.35	6.7
nozzle exit pressure	bar	0.311	0.283	0.296	0.311
ENGINE SIZE ESTIMATION					
total engine length	m	3.52	3.41	3.4	3.39
throat diameter	mm	391.41	307.31	307.22	306.82
nozzle exit diameter	m	2.35	2.08	2.08	2.08
nozzle expansion ratio	-	36	46	46	46

All engines are preliminarily sized by DLR-SART supporting the CAD stage integration process. An example of the K2 gas generator engine thrust chamber is shown in Figure 2 and an EADS architecture concept of K3-46 6.7 is depicted in Figure 3.

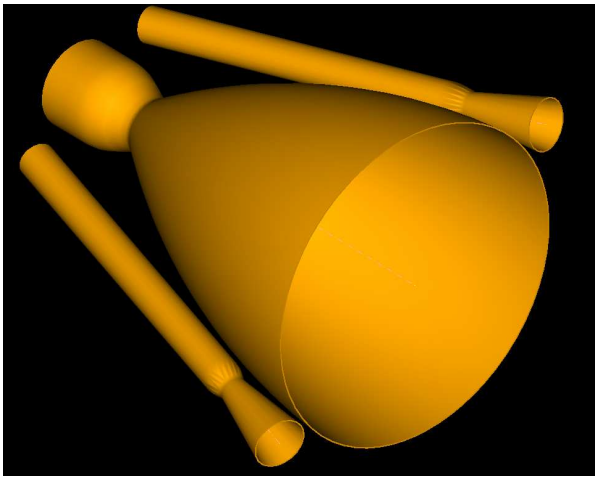

Figure 2: Thrust chamber of WOTAN K2 GG engine

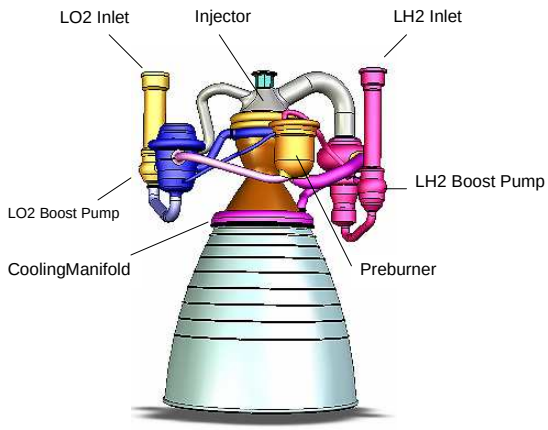

Figure 3: WOTAN K3 engine architecture concept of EADS astrium

3.2.2 Cryogenic upper stage engines

Baseline engine for the upper stages is a single Vinci with 180 kN vacuum thrust. This advanced expander cycle rocket engine is currently under development and

recently demonstrated for the first time its re-ignition capability under simulated space conditions at DLR's Lampoldshausen test site. Note that Vinci is the largest engine of this cycle ever built.

However, 180 kN thrust is not fully sufficient to propel the heavy upper stage of a large TSTO with a payload requirement of 5 ton in GTO. A double engine solution as used in some Centaur stages is assessed as too complex to be integrated and too costly. Therefore, for launchers with lower performance solid first stages a need exists to raise upper stage propellant loading and hence available thrust. (See section 3.2.4 below!) The expander cycle is thought difficult to be enlarged beyond its current size because the chamber wall surface required for the heat transfer does not increase at the same rate as the mass flow. Therefore, DLR-SART defined a gas generator engine with 500 kN thrust. A total engine length of the 500 kN gas generator of at least 3.65 m is too large for the integration in an interstage of reasonable length. Thus, a nozzle extension mechanism similar to Vinci will be needed. A first impression of the lay-out is presented in Figure 4.

Table 2: Characteristic performance data of cryogenic upper stage engine options

		Vinci 180 kN	WOTAN 500kN GG
total engine mixture ratio	**-**	**5.8**	**5.8**
vacuum thrust	kN	180	500
vacuum spec. impulse	s	465	451.8
chamber pressure	bar	60.6	75
total engine mass flow	kg/s	39.46	112.85
chamber mixture ratio	-	5.8	6.23
ENGINE SIZE ESTIMATION			
total engine length	m	4.54	3.64
nozzle exit diameter	m	2.32	2.52
nozzle expansion ratio	-	282	150

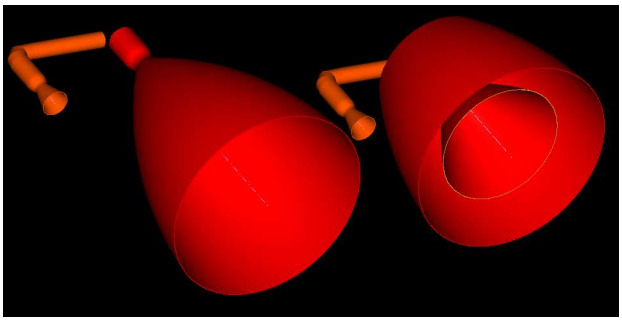

Figure 4: Thrust chamber of WOTAN 500kN GG engine with nozzle extension in deployed and stowed position

3.2.3 Solid motors dimensioning

The solid motor characteristics for very large first stages and for strap-on boosters have been defined by DLR-SART and EADS according to launcher requirements and trajectory constraints. Figure 5 shows as an example the thrust along the approximately 165 s burntime of the F2 first stage. The applied laws are tailored and might require dedicated burning rates. Without detailed analyses, the technical feasibility is oriented towards next generation solid motors as described in [3, 4]. The propellant grain is based on the established HTPB – AP combination and maximum combustion pressure is beyond 80 bars. An average vacuum I_{sp} of 283 s without margin is calculated for the large first stage motors. The strap-on's I_{sp} is lower by 3 s due to their reduced nozzle expansion ratio and to take into account the slight outboard inclination of the fixed nozzles.

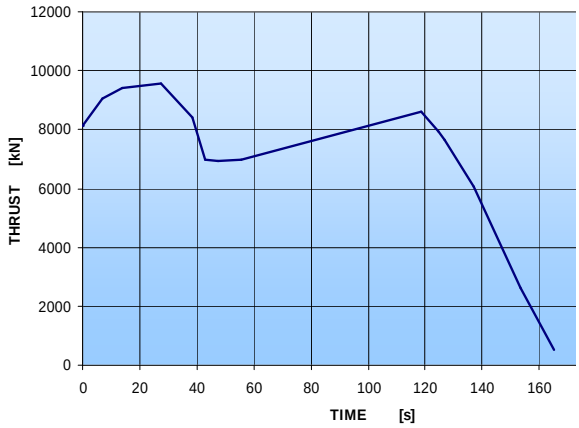

Figure 5: Thrust law of WOTAN F2 first stage solid motor P448

Table 3: Preliminary geometry data of F2 first stage solid motor nozzle

Diameter of throat	875 mm
Nozzle area ratio (exit/throat)	15
Diameter of exit	3400 mm

3.2.4 Vehicle dimensioning and trajectory analyses

All of the two each WOTAN stages are preliminarily dimensioned by DLR-SART such that GLOW is minimal. By using the Tsiolkovski equation and varying the second stage fuel mass a first estimation of the minimal GLOW can be found. For reasons of simplicity, this simple analysis assumes constant structural indices. In addition, also a constant value for the velocity losses during ascent (consisting of gravity loss, drag loss and thrust loss) is used. Although this gives a first approximation of launch vehicle size and optimal staging, in reality the losses will depend heavily on second stage mass. This is due to the fact that thrust vector losses are predominantly surging with increased stage mass in case of an unchanged thrust (180 kN).

In Figure 6 a typical result is presented for the example of K3-46 6.7. The magenta curve shows the lift off mass as a function of the upper stage mass assuming a constant value for the losses. In this case, minimal lift off mass is reached for an upper stage mass of about 50 tons. By performing complete trajectory analyses for launchers with varying upper stage masses the influence of the actual varying losses can be obtained. This is represented by the blue line. As can be seen, the actual optimal second stage mass is at about 35 tons in this case.

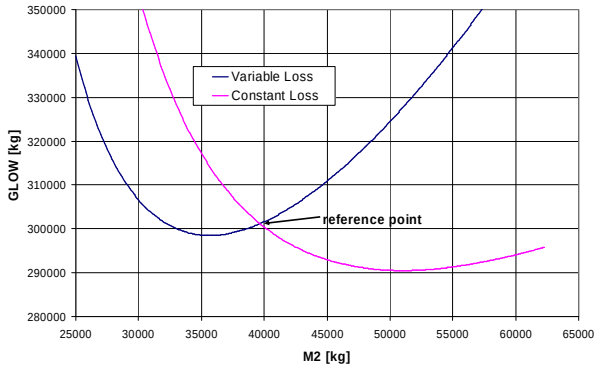

Figure 6: Lift off mass as a function of the upper stage mass for the example of K3-46 6.7

More detailed launcher and stage masses are obtained afterwards by a mass analysis program called stsm. This program estimates masses of all major subsystems and subsequently sums them up to obtain the total vehicle or stage mass. An early CAD lay-out checks on integration feasibility (see Figure 7) and supports the mass analysis. The procedure is used for all WOTAN versions. For the WOTAN K2, this results in a GLOW lift off mass of 337 tons, with the upper stage mass being 35 tons (w/o payload). With the GTO-payload mass being almost 5300 kg, payload fraction is almost 1.6 % [5].

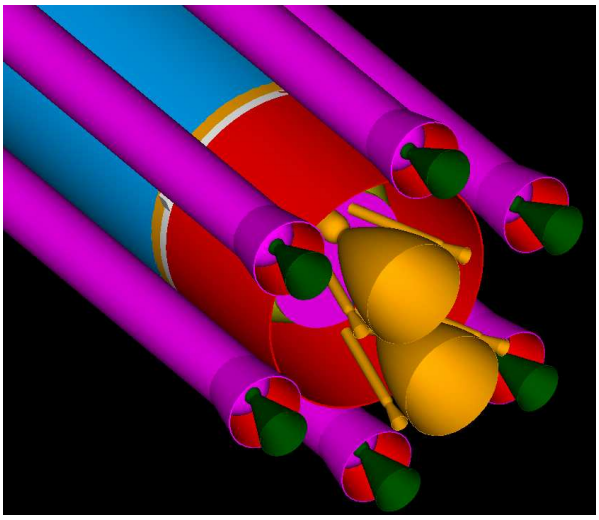

Figure 7: Preliminary lay-out of WOTAN K2+ aft section

To stay within the maximum acceleration limitations of 4.5 g during ascent, the two first stage engines have to be throttled to 70% of their maximum thrust value. Theoretically, it would be attractive to let stage separation occur at this point. However, limitations on the propellant mass increase of the second stage due to its limited thrust, and subsequent increase of the losses, exclude this option. Throttling in a 'step-function', which seems to be easier to be realized, starts at approximately 45 s before stage separation (see Figure 8). Between MECO of the first stage and ignition of the second stage, a 25 s ballistic phase is foreseen. This is necessary because the nozzle of the VINCI engine has to be deployed.

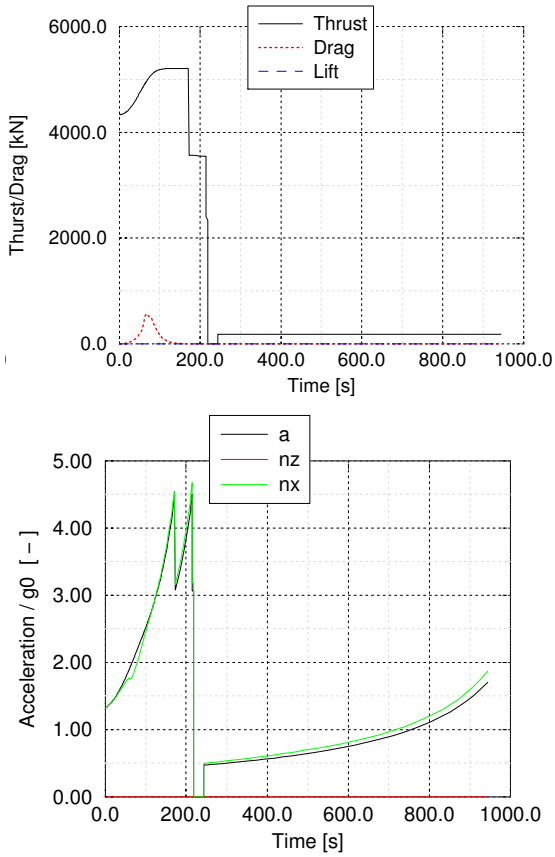

Figure 8: Thrust and acceleration during ascent in GTO of WOTAN K2

Payload capacity of the WOTAN K2 version is increased to 8.5 tons in GTO by adding 6 strap-on boosters. The thrust profile is designed such that the 4.5 g requirement is never exceeded. A single booster has a total weight of about 33 tons, with the structural index being 18%. GLOW at lift off increases to 537 tons. With a maximum payload capacity of 8.5 tons, the payload fraction is 1.6% [5].

The WOTAN K3 version is designed under the same requirements and in the same way as the previously discussed K2 version. However, the first stage engine mixture ratio is varied. The investigated mixture ratios are 6, 6.35 and 6.7. A mixture ratio of 6 results in the highest specific impulse as can be seen in Table 1. On the other hand, a higher mixture ratio results in a higher average propellant density, potentially reducing launcher size and mass.

The changes in mixture ratio prove to have a minor influence on GLOW. The maximum difference is less than 3 tons. The maximum difference in the length of the launcher is 1.5 m [5]. The K-3 6.7 variant is selected as the reference configuration because of a slight edge and thus is used also in future more detailed studies.

Because the K3 variant uses high performance staged combustion engines in the first stage, GLOW at lift off is reduced to 298 tons in case the mixture ratio of 6.7 is assumed. Second stage mass is 36 tons (w/o payload). With a payload capacity of 5.2 tons, payload fraction increases to 1.75%. Also the K3 version has to throttle in order not to exceed the maximum allowable g load.

Payload capacity of the WOTAN K3 version can be increased to 8.2 tons in GTO by adding 6 strap-on boosters. Thrust profile again takes care of the 4.5 g acceleration limit. A single booster has a total weight of about 26 tons, with the structural index being 18%. GLOW at lift off increases to 459 tons. With a maximum payload capacity of 8.2 tons, the payload fraction is 1.79% [5].

For the WOTAN F version with a solid motor first stage two different upper stage engines are considered. First, an upper stage with the 180kN Vinci engine is investigated, as for all K versions. Because of the relatively low specific impulse of the solid propulsion, GLOW is 704 tons, more than twice as much as for any of the K versions. Because of the inferior specific impulse of the first stage, a relatively heavy upper stage of 43 tons is required to minimize the GLOW. The high lift off mass causes the payload fraction to drop to 0.75% [5].

Increasing the payload mass to 8.0 tons by using 6 strap-on boosters increases the GLOW to 981 tons with a single booster weighing 46 tons. This poor result of the baseline PxHy TSTO for heavy GTO-capacity demands a different design approach.

Figure 9 shows that keeping the losses constant would have the potential to reduce the lift off mass by almost 200 tons. The thrust vector losses can best be reduced by using a more powerful engine on the upper stage. Therefore, a launcher F2 with an upper stage and an engine capable of 500 kN thrust is investigated.

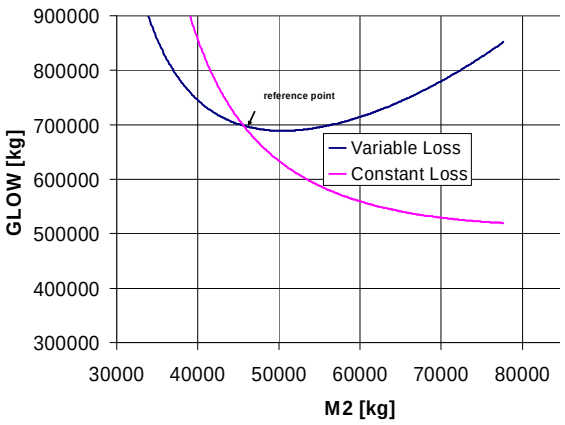

Figure 9: Lift off mass as a function of the upper stage mass for F1

Using the 500 kN engine, lift off mass is significantly reduced to 563 tons. The upper stage mass in this case is 65 tons (w/o payload). With a payload mass of 5.2 tons, payload fraction amounts to 0.92%. Increasing the payload mass to 8.3 tons by using 6 strap-on boosters increases the GLOW to 832 tons. A single booster weighs 44 tons [5].

After finishing the pre-sizing loop of four different TSTO at DLR-SART, two important points are to be noted when considering a two stage launcher with a solid propellant 1st stage:

- Because of the long burnout phase of the solid stage with considerable residual thrust, an active separation system has to be added which counters the thrust of the aft main nozzle. Conventional separation motors are a feasible solution, however, increasing inert stage mass. See section 3.3.3 for another proposed concept.
- Because of the heavy solid stage, center of gravity can be relatively aftward, which may create some additional demands on the thrust vector control.

3.3 Definition of Stages Pre-concept and Structural Sizing

These more detailed sizing and architecture studies are performed by EADS astrium with the support of MT Aerospace. These analyses are restricted to the K3-46 6.7 fully cryogenic launcher and to the improved F2 configuration. Mass results of K3 should be later scaled to enable also a cost assessment of the gas-generator powered K2.

3.3.1 General stage definition aspects

In order to assess the structural dry mass via a pre-sizing, general flight loads have been computed by mean of a simplified pre-project approach, for having realistic orders-of-magnitude at the location of the most important structural elements. Additionally, a functional general architecture of stages has been established for allowing a pre-sizing when necessary for main sub-systems mass estimates or mass allocation and to propulsion function realization. It concerns typically:

- Functional stage propulsion system conceptual architecture, and flow schematics.
- Propellant loading need, and residual estimate (including thermal).
- Tanks volume need.
- Simplified pressure allocation pre-sizing.
- Pressurization system concept and pressurization-fluid need.

3.3.2 Fully-cryogenic version “K3”

The general definition, essentially driven by the needed propellant mass, the integration of solid boosters (for the augmented-performance option) and the major lay-out constraints expectable for the stages propulsion systems, the avionic-bay, and the payload compartment is presented in Figure 10. It concerns the version using the high-performance 1st stage engines (staged-combustion cycle), capable of attaching 6 SRB.

The LOX/LH2 first stage concept is built around the following major sub-systems:

- LOX and LH2 tanks with common bulkhead, and external feed-lines
- Liquid Helium supercritical storage for LOX tank pressurization (heater in each engine) – AR5 1st stage technology currently available, and in production - and regenerative heated GH2 (each engine combustion chamber) for LH2 tank pressurization.
- Engine gimballing by a pair of hydraulic actuators each (pitch and yaw), and GH2 roll-control thrusters

- Redundant electrical system for critical functions, batteries on-board for 1st stage flight needs.
- Strap-On-Boosters mechanical connections on the engine-bay (6 boosters, for having reduced length)
- Classical thermal insulation concept (similar to AR5 cryogenic stages), due to the short flight time and large fluid thermal inertia.

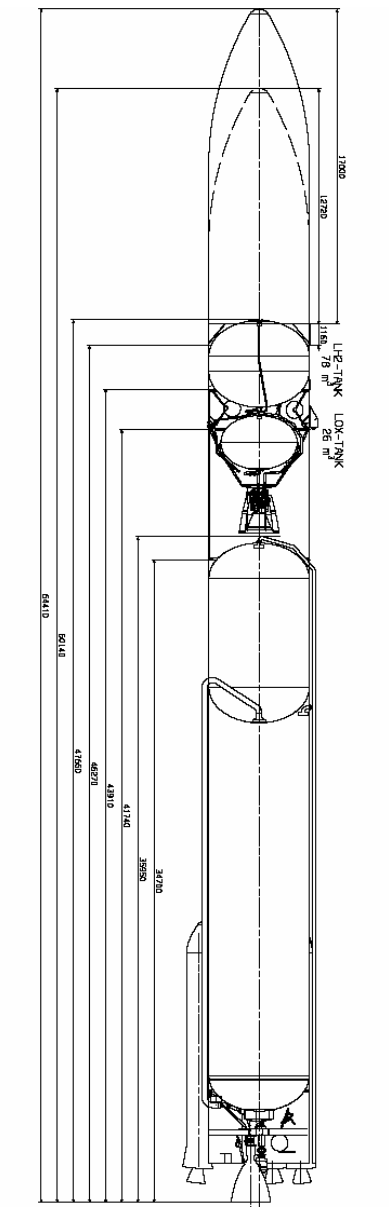

Figure 10: WOTAN "K"3+ conceptual architecture

The overall dimensions of the WOTAN K3 are:

Total Length (short fairing, GTO):	60.1 m
Total Length (Long fairing, ISS):	64.4 m
Launcher diameter:	5.4 m

The conceptual general lay-out of the engine-bay for all major elements, including a smart solution for the attached SRB, is shown in Figure 11

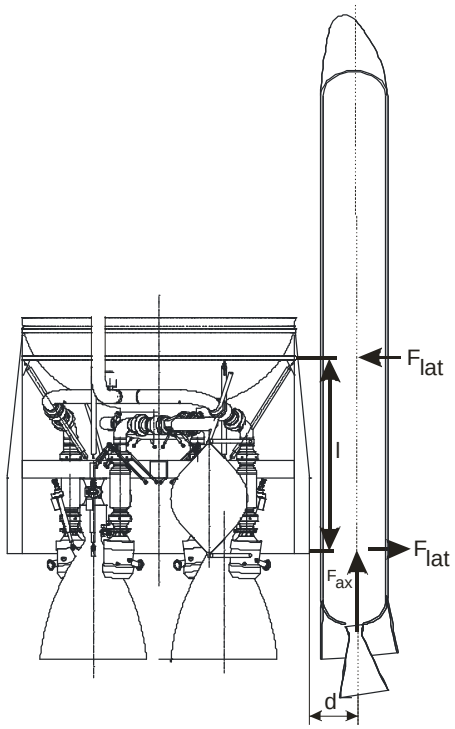

Figure 11: WOTAN "K"3+ Engine Bay concept

The structural concept of the 1st stage tanks and engine-bay has been established in cooperation between EADS-Astrium and MT Aerospace, using in particular the experience in designing and manufacturing the series of Ariane launchers, as well as the technological studies made for structural elements and new material. Al-Li alloy has been selected as the reference material for the liquid propellant tanks of the WOTAN concept, and simplified manufacturing and production features based on above experience is retained as much as possible, for the major structures analyzed at this conceptual step.

The resulting "K3" 1st stage concept general features, from the first analysis step, are as follows:

Total Length	36 m
Stage diameter	5.4 m
Stage dry-mass	24.5 t
Total propellant loading	234 t

The upper-stage concept has taken benefit of the previous studies made for extending mission capabilities of European launchers, and for introducing the Vinci expander cycle in an improved AR5 cryogenic upper-stage. A conceptual geometrical architecture of the stage is shown in Figure 12. The stage accommodates also the launch vehicle avionics on a platform located at the top of the stage, in the vicinity of the payload compartment.

The LOX/LH2 second stage concept is built around the following major sub-systems:

- Separate LOX and LH2 tanks
- Single engine mounted on a thrust-frame, which also accommodates fluid equipment
- Engine gimballing by a pair of hydraulic actuators each (pitch and yaw), and GH2 roll-control thrusters
- High-pressure (400 bar) ambient temperature Helium storage for LOX tank pressurization, and

regenerative heated GH2 (engine combustion chamber) for LH2 tank pressurization.

- Redundant electrical system for critical functions, batteries on-board for 2nd stage and payload-separation flight phase needs.
- Classical thermal insulation concept (similar to AR5 cryogenic stages) for GTO reference mission
- Specific additional equipment (thermal insulation, propellant settling system) as kits for "versatile" missions

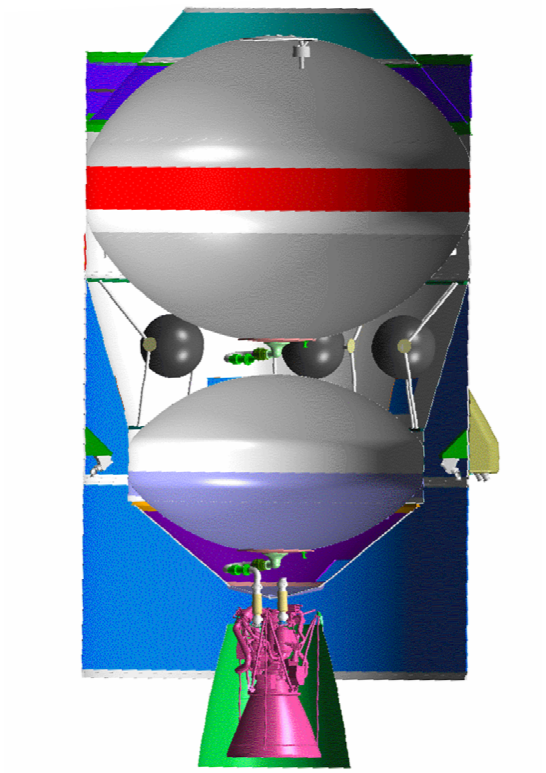

Figure 12: WOTAN "K"3 conceptual architecture of 2nd stage H30

The resulting "K3" 2nd stage concept general features, from the first analysis step, are as follows:

Total Length	11.5 m
Stage diameter LH2 / LOX	5.4 m / 4.2 m
Total propellant loading	31.5 t
Stage dry mass target (after separation)	3300 kg

The dry-mass target (for allowing the mission) is driving the choice of material as well as the architecture choice of the stage concept. At the current step of the study, this mass target could be reached with a common-bulkhead architecture and light-weight design (rather than the current reference architecture with separate-tanks architecture), but with negative impacts on the realization of versatile missions. This issue is still under study.

3.3.3 Solid 1st stage / cryogenic 2nd stage version "F2"

The diameter of the first stage solid motor has been chosen at 4.6 m in order to remain compatible with other heavy solid motor pre-project studies made by French industry and space agency [3, 4]. For the upper-stage a diameter of 5.4 m has been retained (same as for the fairing). The WOTAN "F" launcher general concept definition is presented in Figure 13.

General launcher concept data:

Total Length (short fairing, GTO)	51 m
Total Length (Long fairing, ISS)	56 m
Launcher diameter (lower section / upper section)	4.6 m / 5.4 m

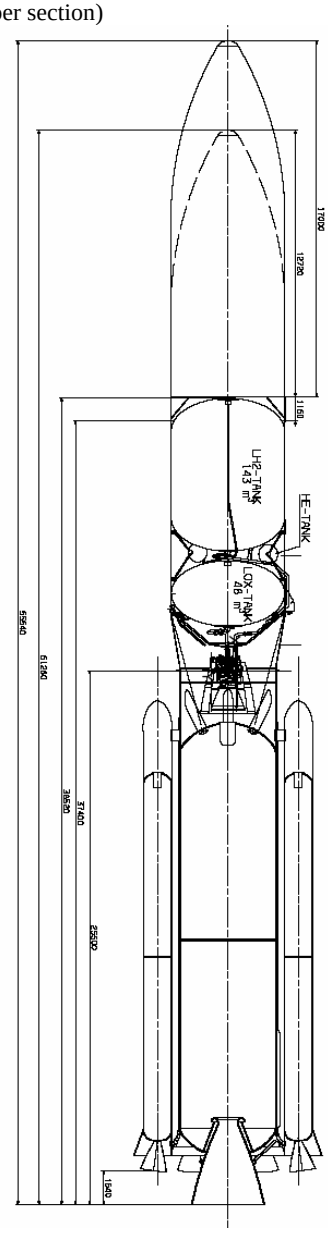

Figure 13: WOTAN "F"2+ conceptual architecture

The Solid Propellant Heavy First Stage concept is built around the following major sub-systems:

- Composite Motor Casing, in 2 segments.
- Propellant grain of new generation, allowing large mass and large geometry casting. Profile and grain structure adapted for limiting the maximum acceleration (compare section 3.2.3 and [3, 4]).
- Flexible nozzle gimballing by a pair of hydraulic actuators (pitch and yaw), and Hot-Gas (hydrazine as reference) roll-control thrusters.
- Redundant electrical system for critical functions, batteries on-board for 1st stage flight needs.
- Strap-On-Boosters mechanical connections on the aft and fore skirts (6 boosters, due to large

additional propellant mass needed for the mission).

- Specific residual thrust-neutralization device for separation phase.

A special variant of a thrust neutralization device has been proposed by EADS for the F2 first stage [6]. Six exhaust pipes are accommodated in the front skirt of the F2 first stage. They link the motor casing upper dome to the external cylinder on the front skirt. At separation, a pyrotechnic system opens the pipes in order to generate an axial thrust in the opposite direction to the nozzle thrust. The proposed concept's is shown in Figure 14 and the main parameters are:

- 30° angle w.r.t. flight direction.
- Internal equivalent throat diameter of 390 mm for total neutralization of nozzle thrust.
- Rigid connection between pipes and upper dome
- Interface between pipes and front skirt guided in translation and connection with springs in the radial direction of the pipes.

TRL of this new concept for space launchers is low. Separation or braking rockets might be a potential fall-back replacement of this device.

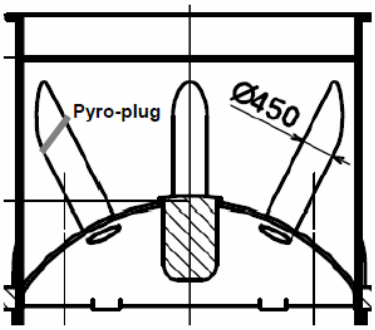

Figure 14: Schematic of proposed residual thrust neutralization device

The resulting "F2" 1st stage concept general features, from the first analysis step, are as follows:

Total Length	25.5 m
Stage internal diameter	4.6 m
Motor casing length	20.4 m
Stage dry-mass	32 t
Total propellant loading	456 t

The cryogenic Upper-Stage is derived from the "K3" version presented in the previous paragraph 3.3.2, but both tanks with 5.4 m diameter due to the larger amount of propellant (Figure 15). The functional architecture is also the same as for the "K3" version, but the needed single engine has a much larger thrust of 500 kN. The resulting "F2" 2nd stage concept general features, from this first analysis step, are as follows:

Total Length	14 m
Stage diameter	5.4 m
Total propellant loading	59.2 t
Stage dry mass target (after separation)	6100 kg

The dry-mass target (for allowing the mission) is driving then the choice of material as well as the architecture choice of the stage concept. At the current step of the study, the mass target could be reached with a common-bulkhead architecture and light-weight design (rather than the current reference architecture with separate-tanks), but with negative impacts on the realization of versatile missions. Related questions are still under study.

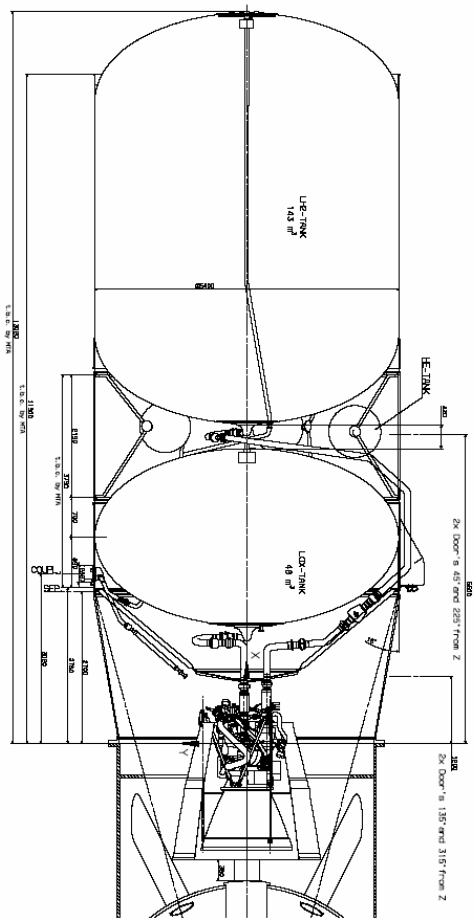

Figure 15: WOTAN "F"2 conceptual architecture of upper stage H55

3.4 Performance Synthesis

The performance calculations of the different WOTAN TSTO configurations are still based on the first sizing iteration of DLR-SART as described in paragraph 3.2. Although the exact mass values are not finalized, some tendencies like for the launcher's dry mass (Figure 16) can already be presented.

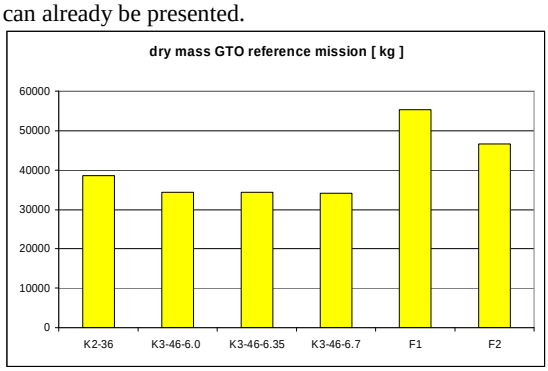

Figure 16: Dry masses of WOTAN launchers in case of GTO reference mission

The difference in dry mass between the three K3 variants with different mixture ratio is very small, while its best version has an edge of about 10% on the gas generator powered K2.

All launchers are sized for the same reference payload in GTO of 5000 kg as TSTO and 8000 kg with boosters which they achieve with some margin. Therefore, it is more interesting to compare the required GLOW presented in Figure 17. The difference between the fully cryogenic versions is small when compared to the solid first stage based systems.

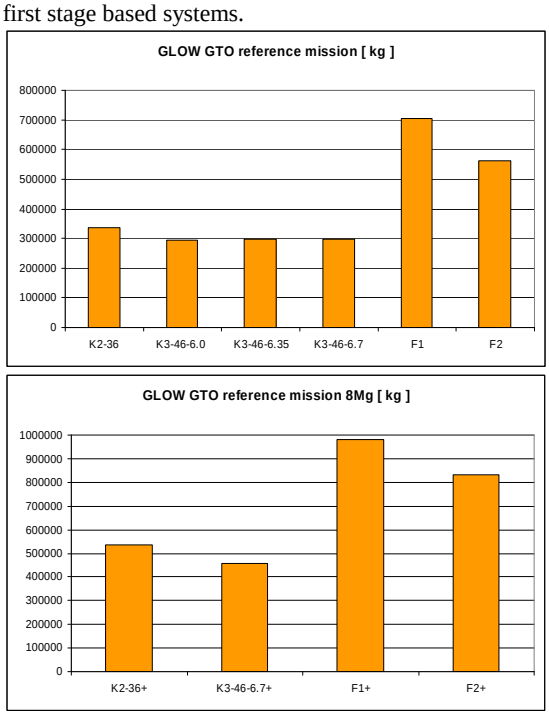

Figure 17: GLOW of WOTAN launchers for 5 and 8 ton GTO missions

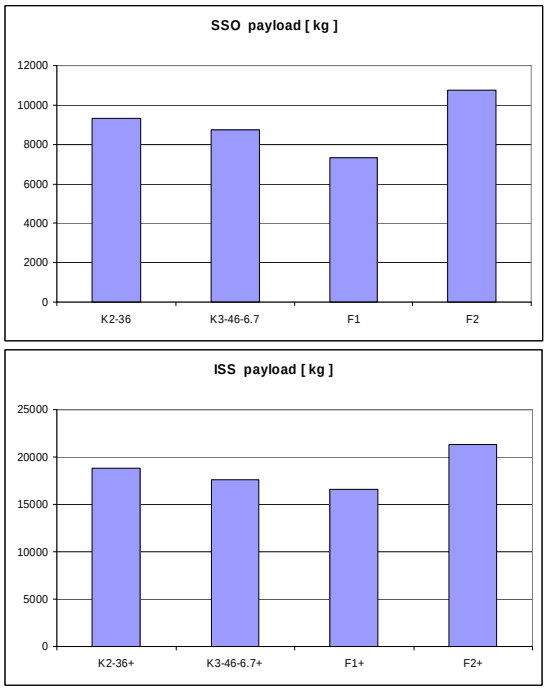

Figure 18: Separated payload mass of WOTAN launchers for secondary SSO and ISS missions

Regarding the secondary missions, a comparison of achieved payload reveals diverging launcher performance. The ISS re-supply mission and the polar SSO-mission payload masses are shown in Figure 18. All investigated types are able to deliver heavy platforms into SSO without strap-on boosters. In case of the flight to the ISS it can be stated that only the F2 with the increased thrust upper stage engine is able to match the current Ariane 5 ES performance.

4 SMALL LAUNCHER EVOLUTION OPTIONS

Currently, a small launcher with an advanced solid propellant first stage, P80, is under development in Europe. This VEGA called vehicle should become operational within the next few years. VEGA consists of three solid rocket motors and a small liquid propulsion module for precise orbit injection called AVUM. Germany is not participating in this launcher development project.

However, the need for a performance upgrade of VEGA might arise in the next decade. A simplification of the overall lay-out combined with a reduction in the total number of stages and the introduction of larger liquid propellant upper stage could be an interesting configuration. Several options of different propellant combinations and engines are currently under assessment in the German VENUS study. This work will be another joint DLR-SART EADS astrium effort. However, the VENUS results presented in this paper are restricted to the DLR preliminary sizing investigation because more detailed stage analyses are not yet available.

4.1 Investigated Configurations

The different upper stages investigated differ in propellant type and engine. Upper stage versions A till E should replace the VEGA Z9 3rd and AVUM 4th stage. Upper stage version F should replace the VEGA Z23 2nd stage, the Z9 3rd stage and the AVUM 4th stage, resulting in a TSTO launcher. Below all the investigated versions are listed. For each version the potential maximum payload capacity is determined.

VENUS version “A”:
Version "A" intends replacing the current Vega Z9 solid 3rd stage and the AVUM 4th stage by a single new storable propellant stage equipped with Ariane 5's AESTUS engine.

VENUS version “B”:
Version "B" intends replacing the current Vega Z9 solid 3rd stage and the AVUM 4th stage by a single new storable propellant stage equipped with a potential future AESTUS-2 engine.

VENUS version “C”:
Version "C" intends replacing the current Vega Z9 solid 3rd stage and the AVUM 4th stage by a single new cryogenic (LOX/LH2) propellant stage equipped with the 180 kN Vinci engine.

VENUS version "D":
Version "D" intends replacing the current Vega Z9 solid 3rd stage and the AVUM 4th stage by a single new cryogenic (LOX/LH2) propellant stage equipped with an optimally adapted expander-cycle cryogenic engine.

VENUS version "E":
Version "E" intends replacing the current Vega Z9 solid 3rd stage and the AVUM 4th stage by a single new LOX/CH4 (Methane) propellant stage equipped with an optimized expander-cycle cryogenic engine.

VENUS version "F":
Version "F" intends replacing the current Vega Z23 solid 2nd stage, Vega Z9 solid 3rd stage, and the AVUM 4th stage by a single new cryogenic (LOX/LH2) propellant stage equipped with a 180 kN Vinci engine.

4.2 Preliminary Launcher Sizing

The launcher sizes are iteratively found by SART in combination of mass estimation and trajectory simulation. In case of VENUS versions D and E, upper stage engines were designed using the DLR tool LRP1.

4.2.1 Upper stage engines

Upper stage engine data are presented in Table 4. In the trajectory analyses, an additional margin of 5 s on the specific impulse is taken into account for all cryogenic engines, 4 s for AESTUS 2, and no margin on the already operational AESTUS.

The AESTUS 2 engine is a proposed upgrade of the AESTUS engine. AESTUS 2 uses turbopumps, eliminating the need for heavy, high pressure tanks. The turbopumps allow for a higher chamber pressure and mass flow and therefore an increase in specific impulse and thrust. Some engine data are not yet fixed, providing some uncertainty for this engine in Table 4.

For the VENUS D version, two LOX/LH2 powered expander cycle engines are investigated, one with a thrust of 100 kN and one with a thrust of 60 kN. Both engines operate under a chamber pressure of 50 bar. The expansion ratio of the 100 kN engine is limited to 200, to fit within the diameter of the Z23 second stage. The expansion ratio for the 60 kN engine was kept at the same value. Both engines thus have a calculated specific impulse of 462 s. (Table 4) The nozzle exit diameter of 1.61 m for the 100 kN version leaves margins around the nozzle within the interstage. The 100 kN engine nozzle is foreseen to be retractable, much in the same way as for the Vinci engine. This prevents excessively long interstages, thus saving some weight, however adding mass and complexity to the engine. The 60 kN is not equipped with a retractable nozzle.

The methane engine for the VENUS E version has some similar parameters as the 100 kN LH2 engine. Thrust, chamber pressure and expansion ratio are equal. The engine has a calculated specific impulse of 379.6 s. The nozzle exit diameter of 1.56 m leaves margins around the nozzle within the interstage. The engine nozzle is foreseen to be retractable, as is the case for the 100 kN LH2 engine and the Vinci engine.

Table 4: Characteristic performance data of small launcher upper stage engine options (partially calculated)

		AESTUS	AESTUS 2	VINCI	Version D-LOX/LH2		Version E-LOX/CH4
					60 kN	100 kN	
vacuum thrust	kN	27.8	54.5	180	60	100	100
vacuum spec. impulse	s	321.6	339	465	461.9	461.9	379.6
ENGINE SIZE ESTIMATION							
total engine length	m	2.183	2.183 ?	4.54	2.47	3.01	2.97
nozzle exit diameter	m	1.315	1.315 ?	2.32	1.25	1.61	1.56
nozzle expansion ratio	-	≈ 84	≈280	282	200	200	200

4.2.2 Vehicle dimensioning and trajectory analyses

Trajectory and performance analysis for all the upper stage configurations is made, targeting the VEGA reference mission, a final circular orbit with an altitude of 700 km and an inclination of 90°. To reach this circular orbit, it is preliminarily assumed that injection will take place in a 190 km x 700 km transfer orbit with an inclination of 90°. After injection and ballistic phase an apogee circularization maneuver takes place. The upper stage sizes of maximum payload are determined by varying the upper stage propellant mass, adapting the mass model, and trajectory optimization for every upper stage variation.

For the VENUS A version, this results in a relatively small optimum fuel mass of around 4000 kg. The AESTUS engine is pressure fed. Because of the high pressure in the tanks, propellant is divided over 4 tanks, which are still relatively heavy. In this case, the complete upper stage without payload weighs about 6000 kg (w/o payload). The configuration is severely restricted by the low 27.8 kN thrust of the AESTUS. Payload capacity could be up to 1340 kg, considerably below that expected for VEGA.

In case of the more powerful VENUS B version, this results in an optimum upper stage fuel mass of around 8000 kg. Payload capacity is almost 2200 kg. The increased payload mass clearly shows an advantage of using the higher performance AESTUS 2 engine instead of the pressure-fed AESTUS engine.

The cryogenic VENUS C upper stage with Vinci could load around 16000 kg fuel. Payload reaches an impressive 3560 kg. The superior payload capacity is easily explained by the high performance engine. However, the large upper stage propellant mass and low density of LH2 causes the size of the upper stage and

therefore total launcher length to become very long. This could lead to problems regarding high bending moments. In addition the upper stage diameter is larger than the diameter of the Z23 2nd stage. This is unavoidable because of the large nozzle diameter of the Vinci engine. Potential problems of such a configuration could be aerodynamic buffeting, vehicle control and difficult stage integration.

The VENUS D version has an optimum upper stage LOX/LH2-fuel mass of around 7000 kg for the 60 kN configuration, and around 11000 kg for the 100 kN version. The 60 kN version has a payload maximum of 2760 kg, whereas the 100 kN version has a capacity of about 3200 kg. Upper stage mass without payload is 9540 kg for the 60 kN version and about 13000 kg for the 100 kN version. In these two cases the launcher again becomes quite long and this could lead to problems regarding high bending moments or control issues.

Analysis of the methane powered VENUS E version shows that the optimum upper stage fuel mass lies around 10500 kg. The E version has a payload maximum of about 2440 kg; more than the storable AESTUS 2 variant. Compared to its quite similar 100 kN LOX/LH2 counterpart, performance is clearly much lower. Even the 60 kN LOX/LH2 powered upper stage achieves a higher payload. The length of the VENUS E launcher is only marginally shorter, and therefore does not offer a significant benefit.

For the VENUS F TSTO version, the optimum upper stage fuel mass lies around 16000 kg. The F version has a relatively low lift off mass of below 120 tons because the heavy Z23 stage is abandoned. This causes the acceleration of the launcher to exceed 6 g, if positioned on an unchanged P80. Therefore, the P80 1st stage end burn profile is adjusted. The thrust curve after 50 s is to be reduced and consequently burn time has to be increased, keeping the total propellant loading unchanged. The actual feasibility of this approach is not checked here. However, such a tailored profile should be in full compliance with the technology required for the WOTAN solid first stages. (Compare section 3.2.3 and [3, 4].) Upper stage mass without payload is 19.8 tons. Payload capacity could reach almost 2600 kg.

This VENUS F TSTO launcher shows very interesting performance. Its payload capacity comes close to the 60 kN D version, but lift off mass is much less than for all other launcher versions and the complete Z23 stage could be saved. The payload fraction is almost identical to the 60 kN D version. The latter is the second highest behind the technically questionable VENUS C version. The small TSTO has the additional advantage of being very compact and having the shortest length of all versions, as demonstrated in a preliminary lay-out shown in Figure 19.

A comparison of the payload fractions generated in the preliminary iteration process for the different versions can be seen in Figure 20.

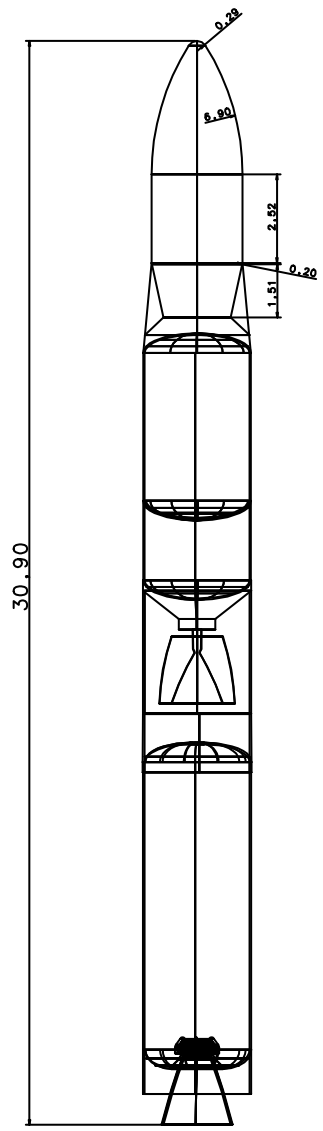

Figure 19: Preliminary lay-out of VENUS F TSTO (P80 + H18)

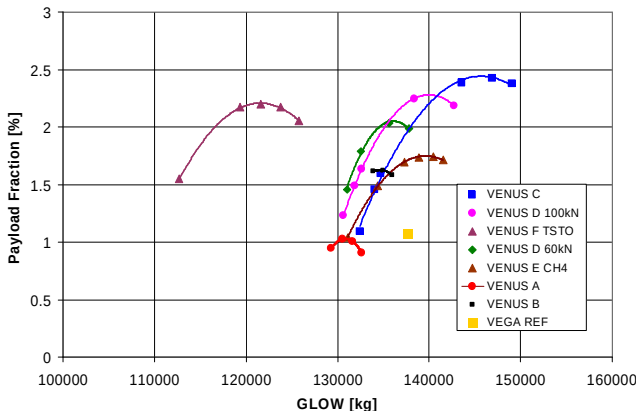

Figure 20: Payload fraction vs. Gross Lift-Off Weight for all VENUS configurations in polar reference orbit

5 CONCLUSION

The paper describes some of the most recent activities in Germany in the technical assessment of future European launcher architecture.

The first part gives an overview on intermediate results of a joint effort of DLR-SART with German launcher industry (EADS astrium and MT Aerospace) in the definition of a next generation upper-medium class expendable TSTO with an initial operational capability after 2020. This study called WOTAN investigates fully cryogenic launchers as well as those with a combination of solid and cryogenic stages, fulfilling a requirement of 5000 kg single payload into GTO.

The first iteration cycle already revealed that a cryogenic first stage with 'low-cost', low pressure rocket engines results in an outsize launcher, raising serious doubts on its economic viability. Thus, this configuration has been eliminated, focusing the study on more conventional gas generator and staged combustion cycle propulsion as well as large solid first stages. More detailed analyses including stage pre-dimensioning, mass estimation, and iterative trajectory optimization to several orbital missions delivered huge data sets for further technical iterations and cost assessment. These data show that a staged combustion first stage has a slight advantage in size of the launcher and that a configuration with solid first stage is only attractive if a powerful upper stage engine is available.

In its second part the paper analyzes options for new liquid fuel upper stages to be put on the P80 solid first stage of the future European small launcher VEGA. In most cases of the recently initiated VENUS study only the third stage Z9 and the AVUM are replaced by a single stage. Versions with storable as well as cryogenic propellants are investigated for the VEGA reference orbit. The performance increase by all LOX/LH2 stages is attractive; however, not all seem to be technically viable. A methane upper stage is in the same performance range as that of a storable propellant stage with sufficient thrust. Some of the upper stages will be designed in more detailed by industry, further refining mass and hence performance data.

A technically and also potentially economically very attractive small launcher option could be the combination of P80 with a Vinci-powered cryogenic upper stage. This TSTO achieves a polar payload capability of more than 2700 kg with a slightly adapted P80 thrust law.

6 ACKNOWLEDGEMENTS

The authors gratefully acknowledge the funding provided by the German space agency for the ongoing WOTAN and VENUS investigations.

Further, the contributions to the preliminary sizing and investigation of the launcher configurations by Mrs. Uta Atanassov, Mr. Josef Klevanski, Mr. Andreas Rittweger and his staff, and all other involved industry colleagues are esteemed.

7 REFERENCES

1. NN: Leistungsbeschreibung zur Studie „Wirtschaftlichkeitsuntersuchungen für Orbital-Transportlösungen von Ariane Nachfolgeträgern (WOTAN)", Juli 2006

2. Klevanski, J.; Sippel, M.: Beschreibung des Programms zur aerodynamischen Voranalyse CAC Version 2, SART TN-004-2003, DLR-IB 647-2003/04, March 2003

3. Cloutet, Ph.; Boury, D.: Low Cost GTO Launcher Solid Propulsion Solutions, presentation at Workshop on Future Launch Vehicles, Paris CNES/HQ, 14. - 15.12. 2005

4. Mercier, A. et al.: Application of Recent Technologies for the Next Generation Solid Rocket Motors, IAC-06-C4.2.3, October 2006

5. Sippel, M.; Atanassov, U.; Klevanski, J.; van Foreest, A.: Trägersystemvorentwurf WOTAN im Rahmen der Studie Wirtschaftlichkeitsuntersuchungen für Orbital-Transportlösungen von Ariane Nachfolgeträgern (WOTAN), DLR internal report, WTN-TN-001/07-DLRSART (1,0), SART TN001/2007 rev.4, DLR-IB 647-2007 / 02, July 2007

6. NN: WOTAN 2. Zwischenmeeting Part: Solid propulsion Stage and Boosters, presentation at DLR Bonn, 20/06/2007

7. Sippel, M.; van Foreest, A.; Atanassov, U.: Launcher Pre-Design VENUS (VEga New Upper Stage), DLR internal report, to be published 2007

Further updated information concerning the SART space transportation concepts is available at:
http://www.dlr.de/SART