A Solid State Marx Generator with a Novel Configuration

S. Zabihi, *Student Member, IEEE*, Z. Zabihi, *Student Member, IEEE*, F. Zare, *Senior Member, IEEE*

***Abstract*— A new pulsed power generator based on Marx Generator (MG) is proposed in this paper with reduced number of semiconductor components and with a more efficient load supplying process. The main idea is to charge two groups of capacitors in parallel through an inductor and take advantage of resonant phenomenon in charging each capacitor up to twice as the input voltage level. In each resonant half a cycle, one of those capacitor groups are charged, and eventually the charged capacitors will be connected in series and the summation of the capacitor voltages are appeared at the output of pulsed power converter. This topology can be considered as a modified MG which works based on resonant concept. Simulated models of this converter have been investigated in Matlab/SIMULINK platform and a Lab prototype has been implemented in a laboratory. The simulation and test results verify the operation of the proposed topology in different switching modes.**

***Index Terms*—High voltage stress, Marx Generator, Pulsed power supply, Resonant converter, Solid state**

I. Introduction

Marx modulator is a popular power supply amongst all pulsed power technologies. The structure and the control simplicity beside being more efficient and flexible in supplying various range of applications make it more applicable in comparison with other topologies like Magnetic Pulse Compressors (MPC)[1], Pulse Forming Network (PFN)[2], and Multistage Blumlein Lines (MBL)[3]. However a new topology has been recently proposed in [4] based on the positive buck-boost converter concept and extended in [5] to have more skills in supplying loads with different demand in pulse shapes. This converter is an efficient and flexible pulsed power supply having merit to supply wide range of loads with high repetitive pulses.

A general configuration of the conventional Marx topology is shown in Fig. 1. The initial concept of this topology is charging a number of capacitors in parallel up to the input voltage level, and then connecting them in series in order to have the summation of capacitor voltages at the output of the power supply. In this way, the aggregation of capacitor voltages which is a high level of voltage will appear across the load with a fast rising time. As can be seen in Fig. 1, each stage of this generator is composed of a capacitor, a high voltage switch, and two power diodes.

Recently solid state technology has been utilized in Marx configuration instead of magnetic switches which were traditionally in use. Insulated Gate Bipolar Transistor (IGBT), Metal–Oxide–Semiconductor Field-Effect Transistor (MOSFET), Silicon-Controlled Rectifier (SCR), and Gate Turn-off Thyristors (GTO) are the semiconductor power switches utilized in recent pulsed power investigations. A high-voltage bipolar rectangular pulse generator using a solid-state boosting front-end and an IGBT based H-bridge output stage is presented in [6] and the generated pulses are intended to be used in algal cell membrane rupture for oil extraction. In another study, an all-solid-state pulsed-power generator consists of a Marx modulator based on discrete IGBTs and a magnetic pulse-sharpening circuit, which is employed to compress the rising edge of the Marx output pulse is proposed in [7] in order to reduce the influence of relatively slow turn-on speed of the IGBT on the pulse rise time of the Marx modulator. An MG topology based on commutation circuit is also proposed in [8, 9] that utilizes IGBTs and SCRs simultaneously. On the other hand, an experimental MG with MOSFET switches was used in [10] to generate pulsed output voltages of up to −1.8 kV in order to produce Pulsed Power Microplasma discharge in N_2 gas and N_2/NO gas mixture for atmospheric pollution control purposes. In another application this MG is used for the surface treatment by microplasma of PEN (polyethylene naphthalate) film using Ar gas and mixtures of Ar with N_2 and O_2 [11]. Improving Indoor Air Quality (IAQ) through decomposition of formaldehyde (HCHO) by a microplasma reactor is another subject investigated in [12] at a discharge voltage of 1.3 kV using a

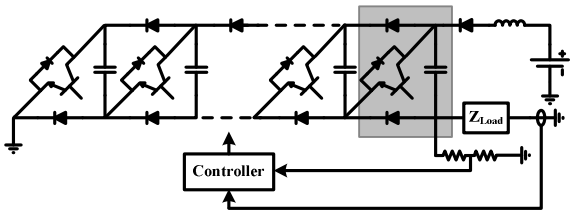

Fig. 1: Conventional MG.

Manuscript received December 31, 2010 ; revised March 22, 2011; accepted April 30, 2011. Date of publication , 2011; date of current version , 2011. This work was supported in part by the Australian Research Council (ARC) under ARC Discovery Grant DP0986853.

S. Zabihi and F. Zare are with the Faculty of Built Environment and Engineering, Queensland University of Technology, 2 George St., Brisbane, QLD, Australia (e-mail: s.zabihi@qut.edu.au; f.zare@qut.edu.au).

Z. Zabihi is with the Electrical Engineering Department of Babol Noshirvani University of Technology, Iran (e-mail: n.zabihi@yahoo.com).

Colour versions of one or more of the figures in this paper are available online at http://ieeexplore.ieee.org.

Digital Object Identifier /TPS.2011

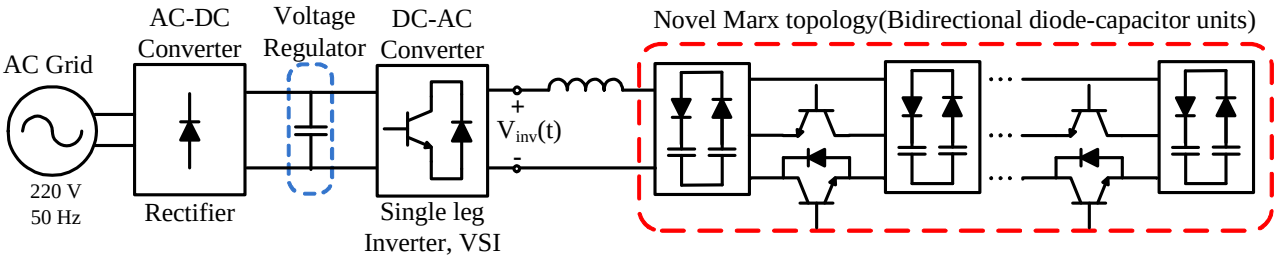

Fig. 2. The block diagram of proposed converter with a new Marx configuration,

high voltage amplifier and an MG with MOSFET switches as pulsed power supplies. The semiconductor technology is also exploited in low power applications of MG such as radar transmitter and receiver. High power variable nanosecond differential pulses generators for ground penetrating radar (GPR) systems based on avalanche transistor and Marx Bank are investigated theoretically and experimentally in [13]. Using avalanche transistor as the switch of Marx circuit, a new type of all-solid-state low-power pulse generator is researched in [14] that can generate short unipolar pulses.

By utilizing power semiconductor switches, especially high-voltage IGBTs, as main switches, Marx modulators have demonstrated many advantages such as variable pulse length and pulse-repetition frequency, snubberless operation, and inherent redundancy [7]. This has substantially improved Marx performance in terms of efficiency and flexibility however there are still other technical issues which should be considered in order to have a more efficient power supply. Although configuration and control simplicity has been known as an advantage for this topology, extra losses caused by using many active and passive components in charging and discharging passes can be counted as a disadvantage for this method. Additionally, adjusting the output voltage level with respect to loads demand is feasible in conventional solid state MG by changing either input voltage level or the switches duty cycle. In this case, an adjustable dc power supply is required at the input to vary the input voltage level. It also should be considered that triggering switches while they are conducting current increases the switching losses.

A new pulsed power generator based on MG is proposed in this paper that improves Marx topology in terms of using fewer components and having less conduction and switching losses. In this proposal, a dc-ac converter is used to supply a new configuration of switches, diodes and capacitors operating in resonant modes. Resonant phenomenon is considered in power electronics in order to minimize switching losses. The concept of the resonant converter has been developed in such a way that switching transients happen when the current being conducted passes through the zero level, in order to keep the switching losses in the power switches to a minimum [15].

II. Topology

A. General Configuration

A block diagram of the proposed pulsed power supply shown in Fig. 2 comprises an ac-dc converter in the front side, a voltage regulator, a dc-ac converter and an MG topology with a new configuration. The full bridge rectifier rectifies the grid voltage and supplies the modulator with a dc voltage. A large capacitor at the output of the rectifier regulates input voltage fluctuations and provides the rest of the topology with a smooth and continuous voltage level. Subsequently in the next stage, this dc voltage is inverted to an alternative voltage waveform through a single leg inverter. The reason behind using a half bridge inverter is utilizing fewer active power switches however a full bridge inverter could supply the MG with more flexibility enabling the symmetrical adjustment of generated voltage level [16, 17]. This alternative voltage that has three levels of $+V_{dc}$, $-V_{dc}$ and zero, is applied to an inductor in the entrance of Marx topology. The configuration presented in this paper as Marx topology uses a new arrangement of capacitors, power diodes and solid state power switches. This topology consists of bidirectional diode-capacitor units which are connected together through two solid state switches with opposite directions. In this configuration each two stages of MG is composed of two capacitors, two diodes and two power switches.

B. Switching States

A simplified four-stage MG shown in Fig. 3 is simulated in this paper to investigate its operation features and to carry out further analyzes on its performance. The approaches can be extended and be considered for a multi-stage MG. Considering supplied voltage levels through the inverter to the Marx configuration, $+V_{dc}$, $-V_{dc}$ and zero levels, three principal operation modes are defined for this topology.

1) Positive charging mode: (S_1:on, S_2:off, S_3:on, S_4:off)

In this switching state given in Fig. 4(a), the inverter's high side switch, S_1, is on while the low side switch, S_2, is off. The positive voltage, $+V_{dc}$, appears at the output of the inverter, $V_{inv}(t)$, (across the inductor and the Marx circuit) due to conduction of S_1. D_1, D_3 and D_{S3} (S_3's anti-parallel body

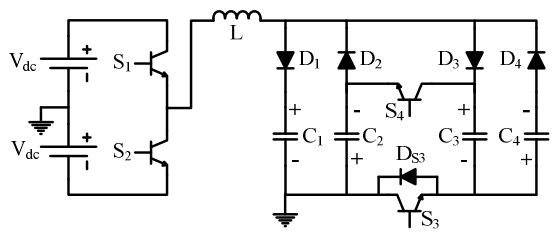

Fig. 3: The four-stage simulated model of proposed MG,

diode) are forward biased in this mode and consequently the capacitors C_1 and C_3 are in the current circuit. Therefore the inductor and the capacitors are charged through a resonant phenomenon. The stored energy in the inductor will then be delivered to the capacitors however there will not be an opposite energy transmission due to the presence of the diodes in the resonant circuits. As a result of this half a cycle resonant between the inductive and the capacitive components of the circuit, the capacitors are charged up to two times the input voltage while the inductor is completely discharged. The components behavior during the resonant is expressed through Equations (1)-(3).

$$C_{eq+} = C_1 + C_3 \tag{1}$$

$$V_C(t) = V_{dc}(1 - \cos\frac{t}{\sqrt{L \cdot C_{eq+}}}) \tag{2}$$

$$I_L(t) = \sqrt{\frac{C_{eq+}}{L}} \cdot V_{dc}(\sin\frac{t}{\sqrt{L \cdot C_{eq+}}}) \tag{3}$$

2) Negative charging mode: (S_1:off, S_2:on, S_3:on, S_4:off)

In this switching state, the high and the low side inverter switches, S_1 and S_2 are turned off and on respectively in order to supply the MG with negative voltage level, $-V_{dc}$. S_4 is also switched on simultaneously to complete the circulating path. The other two diodes, D_2 and D_4, conduct in this time interval and let the rest of capacitors, C_2 and C_4, be charged up to twice the input voltage, however with reverse voltage polarity. The associated circuit is indicated in Fig. 4(b).

3) Load supplying mode: (S_1:off, S_2:off, S_3:off, S_4:on)

In this stage, the inverter switches, S_1 and S_2, and also S_3 are tuned off. S_4 is switched on in the load supplying mode in order to connect the capacitors in series and let the aggregation of voltages across all the capacitors appears at the output of the topology. All diodes are bypassed in this mode, so the energy will be delivered to the load just through S_4. This high voltage pulse which is eight times the input voltage level, V_{dc}, is applied to a load connected to the pulsed power supply. Consequently there will be a break down phenomenon at the load side due to excitation of the load by this high level of voltage and as a result high amount of instantaneous power will be delivered to the load. Fig. 4(c) illustrates the relevant circuit to this state.

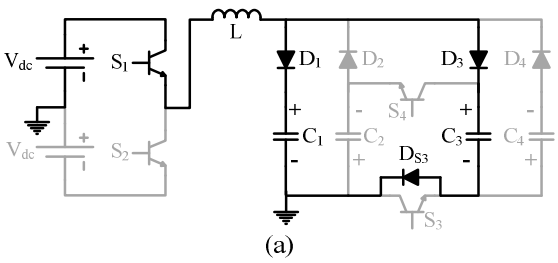

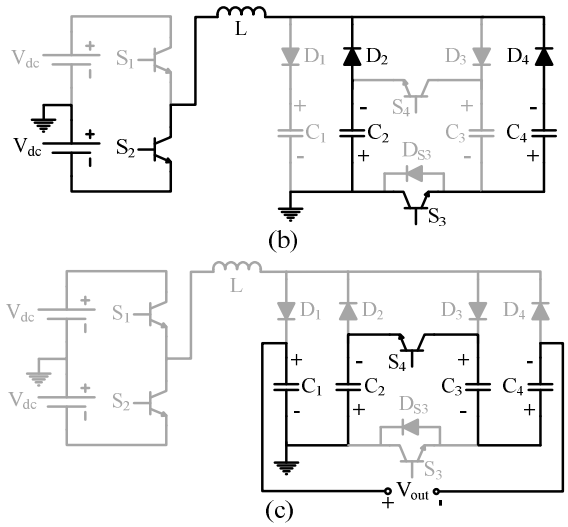

Fig. 4: The switching states of proposed MG (a) Positive charging mode (b) Negative charging mode (c) Load supplying mode,

III. Simulation Results and Analyses

The simulation results are provided in this section to verify the validity of proposed topology. The specifications of the simulated model are presented in Table I. With respect to the current variation in the resonant circuit, Equation (3), it can be seen that the amplitude of the inductor current relies on the size of the inductor and the equivalent capacitor. A proportion of the inductor and the capacitor sizes is selected in the simulations to keep the stored current in an acceptable range.

TABLE I
Specifications of the Modelled Circuit

V_{in}	L	$C_{1,2,3,4}$	f_{inv}	f_r
200 V	100 µH	1 µF	10 kHz	11.2 kHz

A. Control strategy

The control simplicity of Marx concept has been relatively maintained in this configuration. Just an extra switching state has been accommodated that causes the converter to profit from less power loss while supplying the load. Gates switching signals, the voltage and the current waveforms of this Marx topology are shown in Fig. 5.

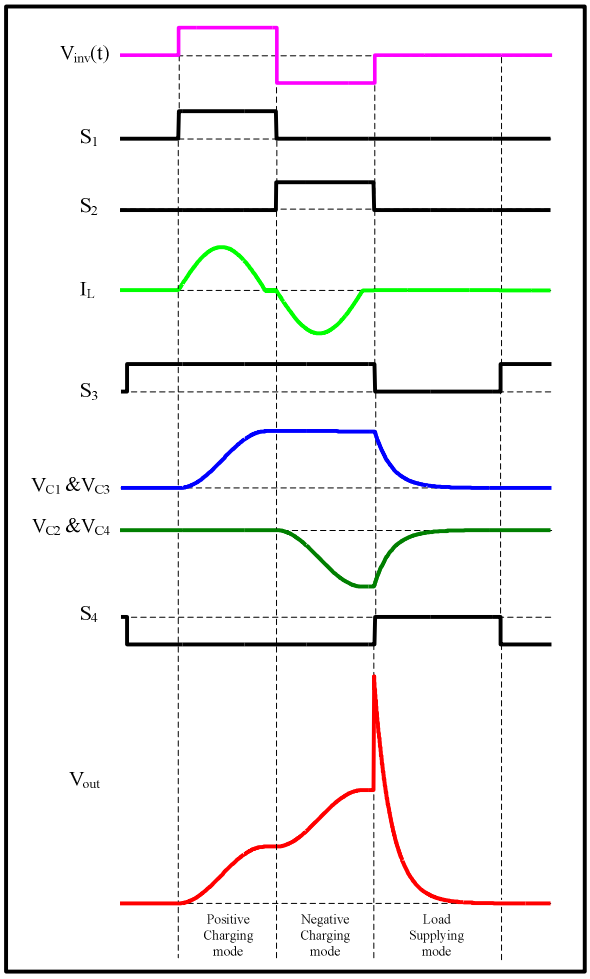

Fig. 5: Current and voltage waveforms accompanied by relevant switching signal patterns,

B. *Single Shut and Repetitively Operated Results*

The simulations are conducted with this model in two situations. A single shut generator is simulated initially that has been extended then to investigate the capability of the modulator in generating high repetitive pulses. The attained simulation results for the single shut and the repetitively operated generator are presented in Fig. 6(a) and 6(b) respectively. The input voltage and the inductor current waveforms are demonstrated in two initial frames shown in Fig. 6(a) and 6(b), respectively. The capacitors and the output voltages are depicted in the last frames of Fig. 6(a) and 6(b). As is apparent in Fig. 6(a), C_1 and C_3 are charged during first half a cycle of the input voltage, $V_{inv}(t)$, while C_2 and C_4 are charged in the next half cycle; both due to the resonant between the capacitors and the inductor. Ultimately, according to the load supplying mode of the converter, the aggregation of capacitor voltages which is also depicted in both last frames of Fig. 6(a) and 6(b) appears at the modulator output. The breakdown phenomenon caused by the excitation of the high dv/dt across the load discharges the capacitor voltages at the last sequence. The extended simulations for a repetitively operated generator revealed that the modulator enables to supply the applications that demand high frequent pulses.

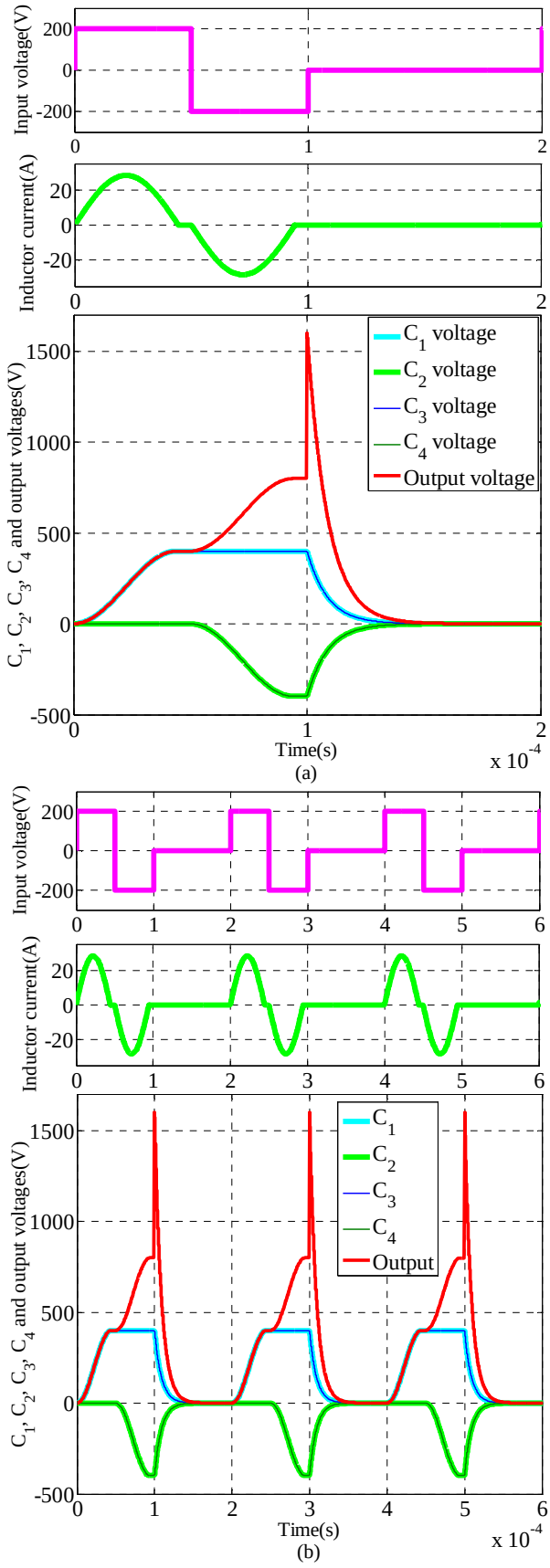

Fig. 6: Simulation results of proposed topology, (a) Single shut, (b) Repetitively operation

C. The voltage stresses across the diodes and the current through the power switches

The voltage across and the current through all power diodes and switches are given in Fig. 7(a) and 7(b) respectively. The maximum voltage across the switches and the diodes is four times the input voltage in this case and the normal currents through the switches and the diodes are 28A and 14A respectively. There is also a current spark up to 45.5A through the middle switch, S_4, during the load supplying mode which is the delivery current to the load.

D. The Generated Voltage Adjustability

As can be inferred from the circuit analyzes, Equations (1)-(3), and the simulation results, the inverter's switching frequency should necessarily be less than the resonant frequency to have maximum potential voltage generation at the output of the converter, however the inverter's switching frequency cannot be more than the resonant frequency unless the inverter switches have anti-parallel diodes as shown in Fig. 8. In this case the inductor charge and consequently the capacitor charges will be different in two half cycles unless the inverter switches duty cycles vary. It indicates that the capacitor's symmetrical charging and accordingly the adjustment of the generated voltage level are relatively impossible in this way. The simulation results, given in Fig. 12(a) clarify that the capacitor residual charges after the load supplying mode will be different in this case which is due to the asymmetrical initial charges and may cause malfunction in normal performance of the power supply. To give this feasibility to the modulator, two hardware solutions are available. The first is using a full H-bridge inverter instead of the half bridge one and controlling it via unipolar modulation method [16, 17]. The second is providing a reserve path for the current that can be accomplished by installing a bidirectional solid state switching connection shown in Fig. 9 in the junction of the inverter and the inductor as given in Fig. 10. In this way a reserve path will be created for the current to be flowed through it once both the inverter switches become off during a resonant half a cycle. That is how the unipolar method can be adopted for a single leg inverter in order to supply the inverter's load with zero voltage levels in the middle of positive and negative voltage level intervals. In this way the stored current in the inductor has sufficient time to be delivered to the capacitors and the inductor will be free of charge for the next resonant half cycle. These devices are just triggered for voltage adjustability purposes. The simulation results given in Fig. 12(b) confirm that how practical is this solution in the symmetrical charging of the capacitors. The two extra switching states according to this control method are demonstrated in Fig.11.

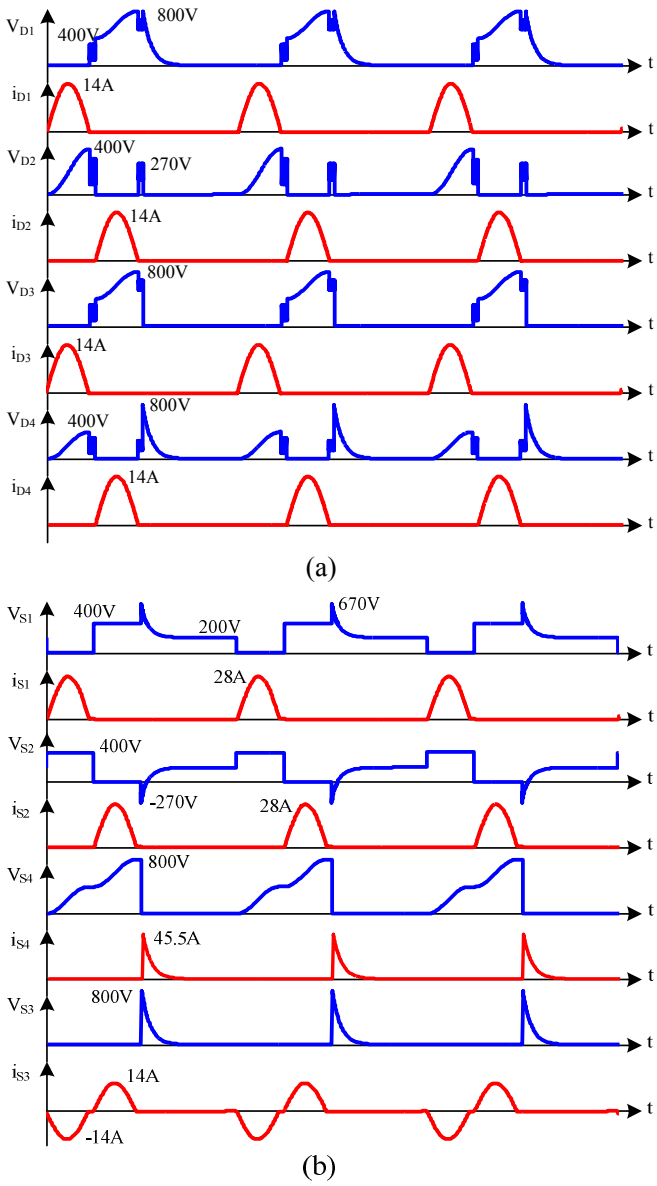

Fig. 7: The components voltages and the currents (a) Diodes, (b) Switches,

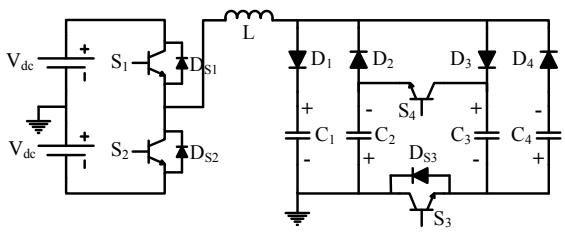

Fig. 8: Using switches with anti-parallel body diodes in the inverter,

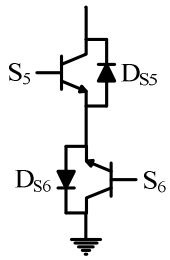

Fig. 9: The bidirectional solid state switching path

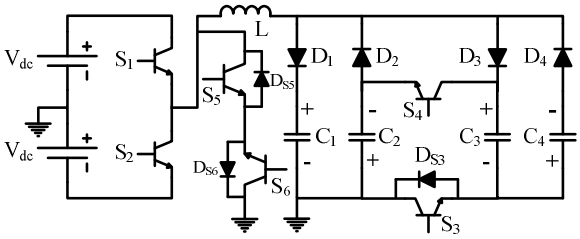

Fig. 10: The proper installation point of the reserve path

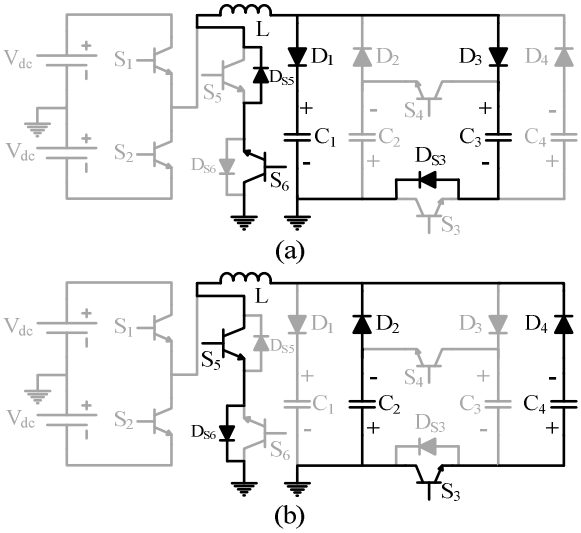

Fig. 11: The extra switching states associated with the unipolar control method of the half bridge inverter

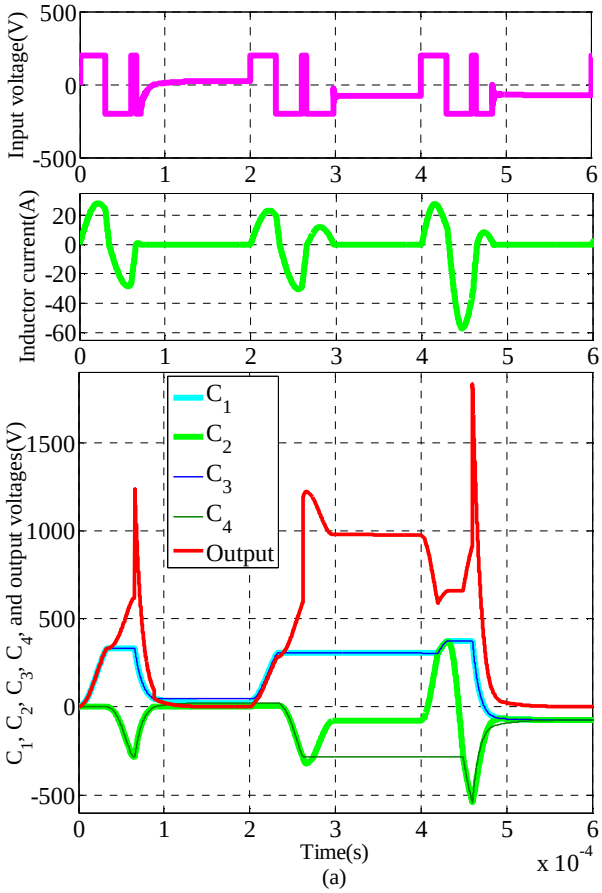

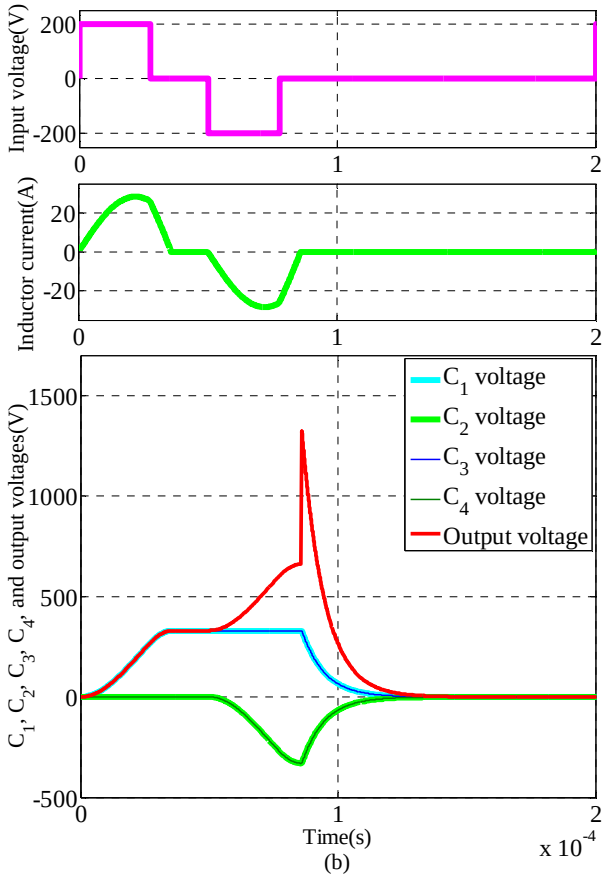

Fig. 12: Simulation results for the converters with (a). anti-parallel body diodes (b). the reserve path.

IV. Experimental Results

A four-stage laboratory prototype set up is implemented to investigate the concept of this circuit practically and to compare the simulation and the hardware results. SEMIKRON IGBTs such as SK25 GB 065 and SK50 Gar 065 are used as power switches in the power board. SK25 GB 065, a package of two IGBTs in series, is utilized as S_1 and S_2 while two SK50 Gar 065s act as S_3 and S_4. TIF28335 DSP is the microcontroller used to run this set up. Skyper 32-pro (SEMIKRON) gate drives generate the switching pulses to trigger the IGBTs and provide the necessary isolation between switching signal ground and the power ground. A general overview of the prototype including the power board, the control modules and the gate drives is shown in Fig. 13. The components specifications are addressed in Table II.

TABLE II
Specifications of the Implemented Circuit

V_{in}	L	$C_{1,2,3,4}$	f_{inv}	f_r
30 V	445 µH	10 nF	NA	53.3 kHz

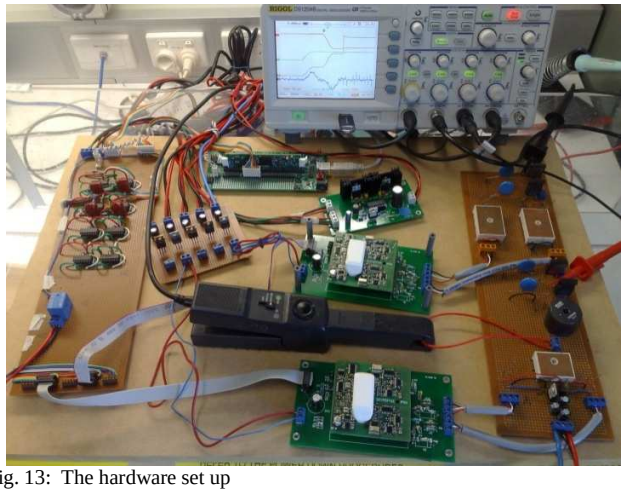

Fig. 13: The hardware set up

Experimental tests are conducted in low voltage range due to the voltage restrictions of the input dc power supply. The input voltage is adjusted to 30 V and the resonant frequency determined through the capacitor and the inductor sizes is 53.3 kHz. The resonant time spam shown by the inductor current in Fig. 14(a) and the current amplitude, 200mA, verify the energy exchange process between the inductive and the capacitive components of the circuit according to the anticipations. As can be seen in Fig. 14(a), the capacitors are charged up to 50V each, and the summation of voltages which is 200 V appears at the output at the last stage of the operation. The summation of voltages across C_1 and C_n (n=4 in this case) is appeared across the load during initial two modes. The rest of voltages (V_{C2}+...+V_{Cn-1}) are added to this level by triggering on S_4 (and its multiple switches) at the third mode. The voltages across S_3 and S_4 are shown in Fig. 14(b). This simplified model can be extended to have more stages and the generated voltage level can be increased by supplying the Marx topology through the rectified grid voltage.

V. Structure and Performance Comparison

In comparison with the conventional solid state Marx topology, the generated voltage in each stage is twice the input voltage due to the resonant between the passive components (an inductor and capacitors); therefore the number of needed stages to generate similar voltage levels is reduced to half of the conventional Marx stages. Furthermore, even the number of diodes for each stage is decreased to one diode compared to two diodes in the conventional configuration. Thus, not only the initial cost will be dropped but also there will be a noticeable power loss reduction in the capacitors charging process. Although the number of solid state switches remained the same as the conventional MG (one switch in each stage) the type of power switches can be varied. In conventional MG, all switching devices should necessarily be fast switches like IGBTs, whereas slow switches such as GTOs or SCRs can be utilized such as S_3 (and its multiple switches) in this topology. Therefore a fast and a slow switch can be employed in each two stages.

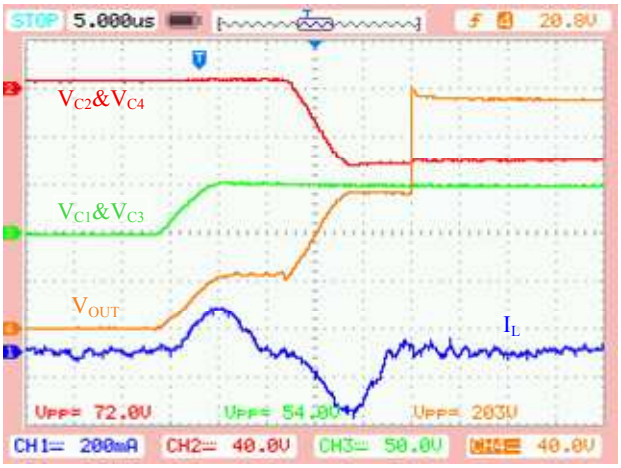

(a)

(b)

Fig. 14: Experimental results for (a) The capacitors and the output voltages and the inductor current (b) The voltages across S_3 and S_4.

On the other hand, the number of solid state switches in discharging path becomes one switch associated with two stages. This has been two switches for two stages in former technology. It means that the load supplying process will be done with less power losses and accordingly higher efficiency. Another advantage of this topology is utilizing resonant phenomenon as the operation method and triggering the switches at the instant at which the flowing current through them is zero. That leads to keep the switching losses in a minimum possible level. A single-leg inverter is the only extra device utilized in this method comparing to the previous version. It is quite reasonable by considering the point that it brought some advantages to this topology. In this converter, the pulse generation frequency is restricted by the resonant frequency. The smaller L and C_{eq} are, the higher repetition rate can be achieved.

VI. Conclusion

A new pulsed power converter is proposed in this paper which introduces a novel configuration as Marx Generator. The whole concept relies on charging two series of capacitors in parallel over half a cycle resonant and then connecting the

capacitors in series through solid state switches. A half bridge inverter placed in the front side of MG supplies it with alternative voltage levels. Utilizing less number of semiconductor components, substituting fast solid state switches with slow switches and consequently having less driving modules in addition to less switching and conduction losses during capacitors charging and load supplying processes are the remarkable benefits of this new configuration. Simulations and tests have been performed and the obtained results verify the proper performance and operation of the proposed converter in accomplishing desired duties.

ACKNOWLEDGMENT

The authors would like to express their gratitude to the Australian Research Council (ARC) for the financial support of this project through the ARC Discovery Grant DP0986853.

REFERENCES

[1] J. Choi, T. Yamaguchi, K. Yamamoto, T. Namihira, T. Sakugawa, S. Katsuki, H. Akiyama, "Feasibility Studies of EMTP Simulation for the Design of the Pulsed-Power Generator Using MPC and BPFN for Water Treatments", IEEE Trans. Plasma Sci., Vol. 34, pp. 1744-1750, 2006.

[2] J. Su, X. Zhang, G. Liu, X. Song, Y. Pan, L. Wang, J. Peng, Z. Ding, "A Long-Pulse Generator Based on Tesla Transformer and Pulse-Forming Network", IEEE Trans. Plasma Sci., Vol. 37, pp. 1954-1958, 2009.

[3] D. P. Kumar, S. Mitra, K. Senthil, A. Sharma, K. V. Nagesh, S. K. Singh, J. Mondal, A. Roy, D. P. Chakravarthy, "Characterization and analysis of a pulse power system based on Marx generator and Blumlein", Review Sci. Instr., Vol. 78, pp. 115107-4, 2007.

[4] S. Zabihi, F. Zare, G. Ledwich, A. Ghosh, H. Akiyama, "A Novel High-Voltage Pulsed-Power Supply Based on Low-Voltage Switch–Capacitor Units", IEEE Trans. Plasma Sci., Vol. 38, pp. 2877-2887, 2010.

[5] S. Zabihi, F. Zare, G. Ledwich, A. Ghosh, H. Akiyama, "A new pulsed power supply topology based on positive buck-boost converters concept", IEEE Trans. Dielectr. Electr. Insul., Vol. 17, pp. 1901-1911, 2010.

[6] S. Bae, A. Kwasinski, M. M. Flynn, R. E. Hebner, "High-Power Pulse Generator with Flexible Output Pattern", IEEE Trans. Power Electron., Vol. 25, pp. 1675-1684, 2010.

[7] D. Wang, J. Qiu, K. Liu, "All-Solid-State Repetitive Pulsed-Power Generator Using IGBT and Magnetic Compression Switches", IEEE Trans. Plasma Sci., Vol. 38, pp. 2633-2638, 2010.

[8] S. Zabihi, F. Zare, G. Ledwich, A. Ghosh, H. Akiyama, "A new family of Marx generators based on commutation circuits (Periodical style—Accepted for publication)", IEEE Trans. Dielectr. Electr. Insul., to be published.

[9] S. Zabihi, F. Zare, G. Ledwich, A. Ghosh, H. Akiyama, "A new family of Marx generator based on resonant converter", 2010 IEEE Energy Conversion Congress and Exposition (ECCE), pp. 3841-3846, 12-16 Sept. 2010.

[10] K. Shimizu, T. Ishii, M. Blajan, "Emission Spectroscopy of Pulsed Power Microplasma for Atmospheric Pollution Control", IEEE Trans. Ind. Appl., Vol. 46, pp. 1125-1131, 2010.

[11] M. Blajan, A. Umeda, S. Muramatsu, K. Shimizu, "Emission Spectroscopy of Pulsed Powered Microplasma for Surface Treatment of PEN Film", 2010 IEEE Industry Applications Society Annual Meeting (IAS), pp. 1-8, 3-7 Oct. 2010.

[12] K. Shimizu, M. Blajan, T. Kuwabara, "Removal of Indoor Air Contaminant by Atmospheric Microplasma," 2010 IEEE Industry Applications Society Annual Meeting (IAS), pp. 1-6, 3-7 Oct. 2010.

[13] W. Ren, H. Wang, R. Liu, "High power variable nanosecond differential pulses generator design for GPR system", 13th International Conference on Ground Penetrating Radar (GPR), pp. 1-5, 21-25 June 2010.

[14] Y. Xuelin, Z. Hongde. B. Yang, D. Zhenjie, H. Qingsong, Z. Bo, H. Long, "4kV/30kHz short pulse generator based on time-domain power combining", 2010 IEEE International Conference on Ultra-Wideband (ICUWB), Vol. 2, pp. 1-4, 20-23 Sept. 2010.

[15] M. K. Kazimierczuk, A. Abdulkarim, "Current-source parallel-resonant DC/DC converter", IEEE Trans. Ind. Electron., Vol. 42, pp. 199-208, 1995.

[16] S. Zabihi, F. Zare, G. Ledwich, A. Ghosh, "A bidirectional two-leg resonant converter for high voltage pulsed power applications", 2009 IET European Pulsed Power Conference, pp. 1-4, 21-25 Sept. 2009.

[17] S. Zabihi, F. Zare, G. Ledwich, A. Ghosh, "A Resonant Based Marx Generator", 20th Australasian Universities Power Engineering Conference, (AUPEC) 2010, pp.1-5, 5-8 Dec. 2010.

Sasan Zabihi (S'09) was born in Iran in 1980. He received his BSc (Eng) degree in Electrical Engineering-Telecommunication, from KhNT University of Technology, Tehran, Iran, in 2003; and his MSc degree in Electrical Engineering-Power Electronics, from Mazandaran University, Babol, Iran in 2006. Since September 2008, he has been pursuing the Ph.D. degree at Queensland University of Technology, Brisbane, Australia. His current research interests are Pulsed power and High voltage power supplies while he has been working in other Power Engineering areas including Power electronics topologies and their applications in FACTS, as well as Power Quality and Renewable Energies.

Zeynab Zabihi (S'11) was born in Iran in 1989. She is currently pursuing Electrical Engineering BSc (Eng) degree at Babol Noshirvani University of Technology, Babol, Iran.

Firuz Zare (M'97–SM'06) received his BSc (Eng) degree in Electronic Engineering, his MSc degree in Power Engineering and his PhD degree in Power Electronics in 1989, 1995 and 2001 respectively. Dr. Zare is an Associate Professor at QUT and a senior member of the IEEE. His main research interests include Pulsed Power, Power Electronics Topologies and Control, Pulse Width Modulation Techniques and Renewable Energy Systems.